Besview

4K Tri-Band Wireless Video Transmission

Atlas X 4K

USER MANUAL

CONTENTS

English ---------- 01

Français ---------- 15

Deutsch ---------- 29

日本語 ---------- 43

Italiano ---------- 54

Español ---------- 68

Nederlands ---------- 82

Polski ---------- 96

Svenska ---------- 110

简体中文 ---------- 124

⚠ WARNING EN

1. Do not use in rain or moisture environments.
2. Do not drop or subject the product to avoid damage.
3. Do not expose battery-powered equipment to prolonged direct sunlight or prolonged charging.

⚠ AVERTISSEMENT FR

1. Ne pas utiliser l'cran dans des environnements humides ou sous la pluie.
2. Évitez de faire tomber ou de soumettre le produit à un choc violent pour éviter les dommages.
3. N'exposez pas l'équipement alimenté par batterie à la lumière directe du soleil pendant une longue période et ne le chargez pas pendant une longue période.

⚠ WARNUNG DE

1. Nicht in regnerischen oder feuchten Umgebungen verwenden.
2. Vermeiden Sie das Fallenlassen oder Stöße auf das Produkt, um Schäden zu vermeiden.
3. Setzen Sie batteriebetriebene Geräte nicht über längere Zeit direkter Sonneneinstrahlung aus und laden Sie sie nicht über einen längeren Zeitraum auf.

⚠ 警告 JP

1.雨や湿気の多い場所で使用しないでください。
2.本製品を地面に落としたり、硬いものにぶつけたり、強い衝撃を与えたりしないでください。故障の原因となることがあります。
3.バッテリ-駆動の機器を直射日光に長時間さらしたり、長時間充電したりしないでください。

⚠ ATTENZIONE IT

1. Non utilizzare in ambienti bagnati o umidi.
2. Evitare di far cadere o sottoporre il prodotto a forti impatti per evitare danneggiamenti.
3. Non esporre l'apparecchiatura alimentata a batteria alla luce solare diretta per lungo tempo né caricarla per un lungo periodo.

⚠ ADVERTENCIA ES

1.No use en ambientes húmedos o húmedos.
2. Evite dejar caer o someter el producto a un impacto fuerte para evitar daños.
3.No exponga el equipo que funciona con baterías a la luz solar directa durante mucho tiempo ni lo cargue durante mucho tiempo.

⚠ WAARSCHUWING NL

1. Niet gebruiken in natte of vochtige omgevingen.
2. Laat het product niet vallen en stel het niet bloot aan sterke fysieke schokken om schade te voorkomen.
3. Stel apparatuur die op batterijen werkt niet langdurig bloot aan direct zonlicht en laad deze niet langdurig op.

⚠ OSTRZEŻENIE PL

1. Nie używać w wilgotnym lub mokrym otoczeniu.
2. Należy unikać upuszczania lub narazania produktu na silne uderzenia, aby zapobiec jego uszkodzeniu.
3. Nie wystawiaj sprzętu zasilanego akumulatorowo na bezposrednie działanie promieni słonecznych przez dłuzszy czas ani nie ładuj go przez długi czas.

⚠ VARNING SE

1. Använd inte i våta eller fuktiga miljöer.
2. Undvik att tappa produkten eller utsätta den för kraftiga stötar för att förhindra skador.
3. Utsätt inte batteridriven utrustning för direkt solljus under lång tid och ladda den inte under lång tid.

EN

1.Product Overview

Thank you for using the Desview Atlas X 4K wireless video transmission system.Atlas X 4K is Desview's first-generation 4Kp60 wireless video transmission system with significant R&D investment, supporting a maximum resolution of 4096*2160p60, with an average latency as low as 35ms, and an ultra-long transmission distance of up to 3km. The system adopts self-developed tri-band simultaneous transmission technology, ensuring extremely stable image transmission on the remaining frequency bands even if one band is interfered with. For encoding and decoding, it utilizes the latest H.265 format, which delivers higher quality and more efficient encoding/decoding compared to H.264, with bandwidth reduced to 50% of H.264, nearly lossless encoding, better motion prediction and compensation, and an overall performance improvement of 40% over H.264. Additionally, this transmission system supports multi-stream and multi-bitrate simultaneous operation.
Besides using the HDMI and SDI to connect the monitors, users can also perform wired monitoring (UVC) via mobile devices or PC devices. Both the transmitter and receiver support UVC feature, with the transmitter additionally supporting SDI input with HDMI loop-out, and HDMI input with HDMI loop-out.

2.Product Features

- Supports Ultra HD 4Kp60 with downward compatibility
- Utilizes H.265 video encoding/decoding
- Supports multi-bitrate and multi-stream
- HDCP protocol compatible
- Transmitter supports HDMI input & HDMI loop-out, SDI input with HDMI loop-out
- Receiver supports simultaneous HDMI and SDI output
- Ultra-low latency of 35ms
- Tri-band simultaneous transmission (2.4GHz+5GHz+6GHz) + DFS channels
- Both transmitter and receiver support UVC feature
- 3km maximum transmission distance
- Supports DC and NP-F battery power supply
- 1.05-inch full-color TFT display
- Supports intelligent temperature control

3.Packing List

Transmitter(TX) * 1

Receiver(RX) * 1

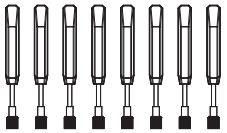
2.4GHz/5GHz Antenna * 8

6GHz Antenna * 4

Camera Mount * 1

User Manual/Certificate * 1

4.Applications

Atlas X 4K supports up to 5 transmission channels, including 1 wired channel

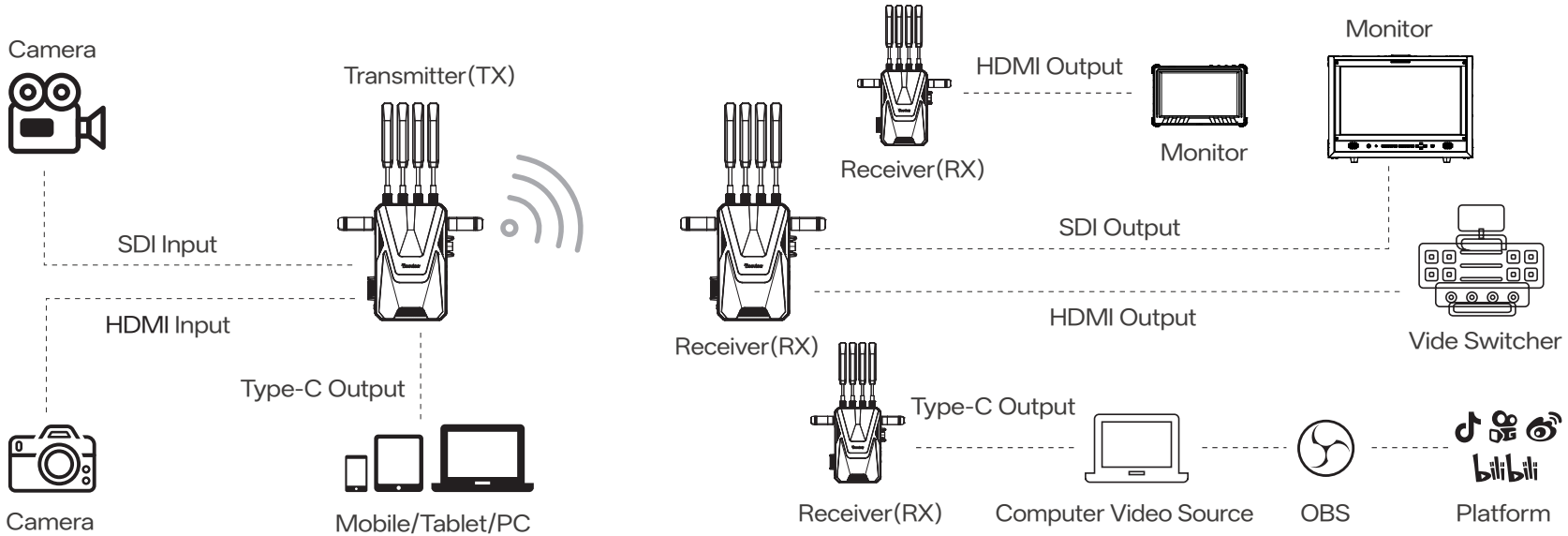

EN

5.Quick Start Guide

5.1 Interface & Button Description

Note: The RX does not have HDMI input interface, other interfaces are indentical to the TX.

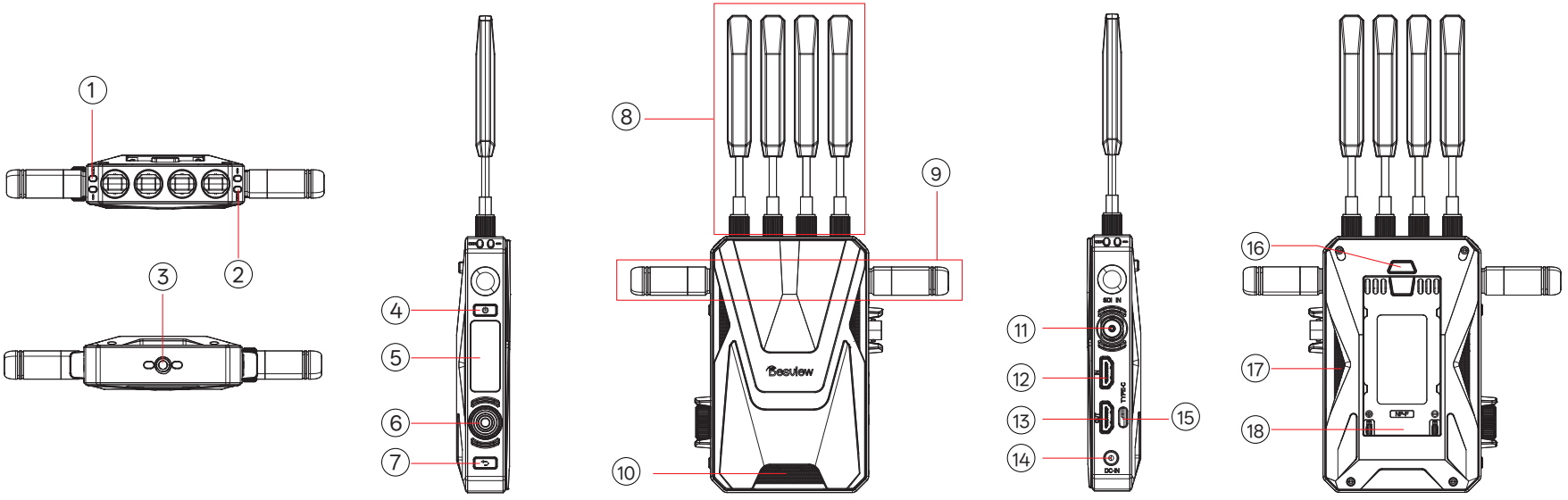

① **Video Input Indicator**
Lights up briefly during power-on to indicate power supply;
During normal operation: Solid light indicates video input detected. No light indicates, no video input.

② **Connection Status Indicator**
Lights up briefly during power-on to indicate power supply;
During normal operation:Solid light indicates connection established , No light indicates, no connection.

③ **1/4" Screw Hole**

④ **Power Button**
Press for I second to power on, Press and hold for 3 seconds to power off.

⑤ **Full- color LCD Display**
Displays transmission status and menu.

⑥ **Menu Knob**

Rotate left/right and press to select/confirm menu operations.

Rotation: Switch between menu pages/options.

Press shortly: Confirm selection in menu.

⑦ **Return Button**

Returns to previous menu page .

⑧ **2.4GHz/5GHz Antenna**

⑨ **6GHz Antenna**

⑩ **Cooling Fan Intake**

Note : Do not block the fan intake during use to avoid affecting performance .

⑪ **3G-SDI Interface**

Transmitter: Video input, connects to video source 's SDI interface .

Receiver: Outputs the received video signal.

⑫ **HDMI Input Interface**

Connects to video source's HDMI interface.

⑬ **HDMI Output Interface**

Transmitter: HDMI loop-out, outputs video from HDMI input to other devices.

Receiver: HDMI output, outputs the received video signal.

⑭ **DC Power Interface**

DC 7.4-24V/2A power input.

⑮ **Type-C**

Wired USB video output for connecting to video output devices.

⑯ **Battery Release Button**

Press and hold the "Battery Lock " button while sliding battery in opposite direction of installation to remove .

⑰ **Cooling Fan Exhaust**

Warning: Do not block the fan exhaust during use to avoid affecting performance.

⑱ **NP-F Series Battery Slot**

Install on the back of the transmission and push down until the “Battery Lock” button clicks and pops out, ensuring it is securely installed.

EN

5.2 Antenna Installation

Install the 2 .4GHz/5GHz dual-band antennas on the top of the transmitter/ receiver as shown in the diagram, and install the 6GHz antennas on both sides.

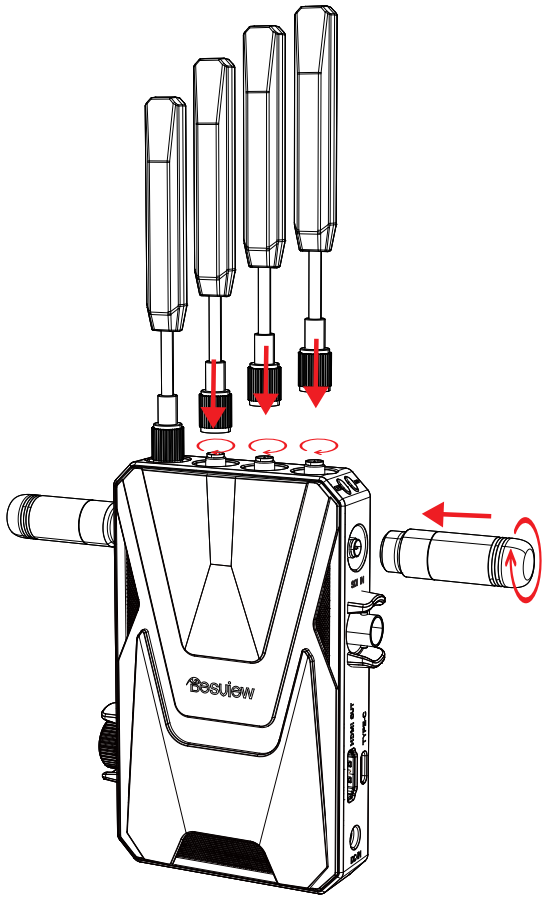

5.3 Mounting the Transmitter on Other Equipment

Mount the Atlas 4K on cameras or other equipment using a snail cloud platform or magic arm.

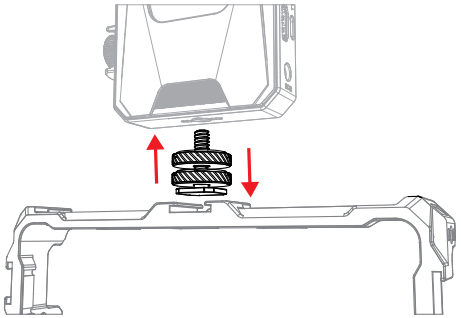

5.4 Connection

Connect the transmitter to cameras, monitoring devices, etc. using SDI/HDMI cables as required by your specific application.

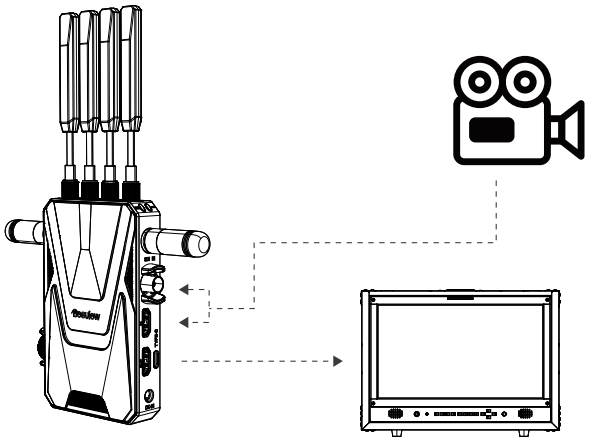

5.5 Power On/Off

Power On:
Short press (about 1 second) the power button - the LCD screen and two indicator lights on the unit will illuminate simultaneously to indicate power on.

Power Off:
Long press (about 3 seconds) the power button to power off.

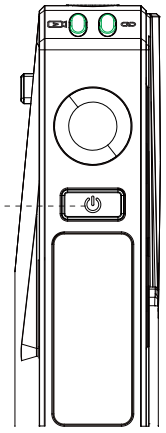

6. Pairing Settings

Pairing Settings: Press and hold the return button " " on both transmitter and receiver simultaneously for 3 seconds to enter pairing mode.

Pairing Status Indicators Pairing

Successful Indicator

Pairing Failed Indicator

EN

7. TX Interface Introduction

7.1 Main Interface

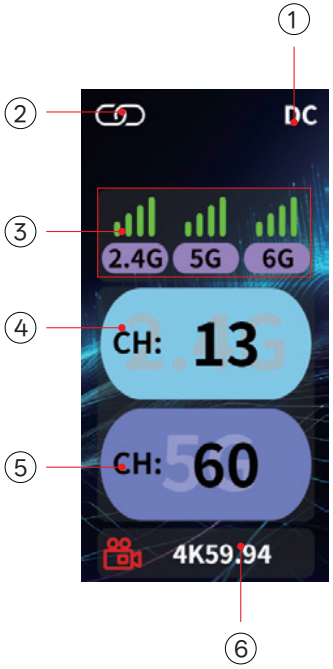

① **Battery Level/Power Indicator**

Displays battery icon when on battery power, shows "DC" when on wired power supply.

② **Connected Devices Count**

Does not display count when no devices are connected.

③ **Wireless Operation Status**

Green: Current frequency band is active.

Gray: Current frequency band is inactive.

④ **2.4G Operation Channel**

Displays current working channel of 2.4GHz, configurable range of A-D.

⑤ **5GHz Operation Channel**

Displays current working channel of 5GHz, configurable range 36-165 (including DFS channels).

⑥ **Input Video Information**

Displays input video resolution and frame rate. Shows "NoSignal" when no video input.

7.2 WiFi Settings Interface

① **2.4GHz Operation Channel**

Display and set current 2.4GHz Wi-Fi channel.

② **5GHz Operation Channel**

Display and set current 5GHz Wi-Fi channel.

③ **Region Switching**

Display and set current operating region of transmitter.

④ **SSID**

Display current 5GHz WiFi SSID of transmitter.

7.3 Transmission Settings Interface

① **Bitrate Settings**

Display and set the current bitrate.

7.4 System Settings Interface

① **Fan Settings**

Display and set fan mode.

② **System Upgrade**

Pre ss knob confirma tion button to ente r system upgrade .

③ **Device Temperature**

Display current device temperature.

④ **System Version**

Display current system version of device.

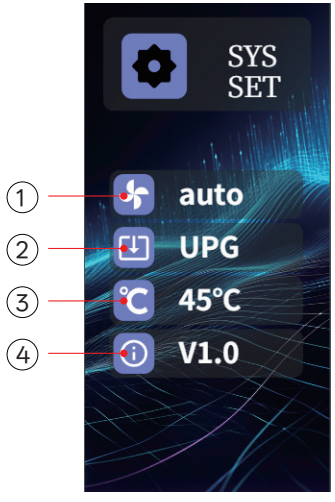

8. Common TX Settings Introduction

EN

8.1 2.4GHz Channel Settings

① Short press knob to enter WiFi settings interface, locate channel settings, rotate knob to select desired channel.

② Press knob to confirm, current channel will display in top bar.

8.2 5GHz Channel Settings

① Short press knob to enter WiFi settings interface, locate channel settings, rotate knob to select desired channel.

② Press knob to confirm, current channel will display in top bar.

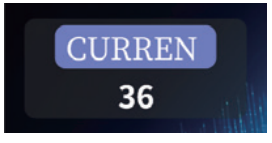

EN

8.3 Region Switching

① Short press knob to enter WiFi settings interface, locate region selection setting.

② Rotate knob to select region, press knob to confirm - will display as "Active" in top bar.

8.4 Bitrate Settings

① Short press knob to enter transmission settings interface, locate bitrate option.

② Rotate knob to select bitrate, press knob to confirm - will display as "Active" in top bar.

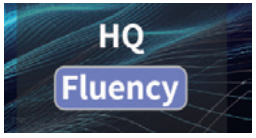

8.5 Fan Settings

① Short press knob to enter system settings interface, locate fan settings, rotate knob to select desired mode.

② Press knob to confirm, current channel will display in top bar.

8.6 System Upgrade

① Visit www.desview.com, navigate to: Support → Firmware in top menu bar.Download the latest version, extract the two .bin files to the root directory of a USB drive.

② Insert USB drive into device, short press knob to enter system settings interface.

③ Enter the section, system will auto-detect upgrade files:
"await" = no file detected"succeed" = updating (do not power off during upgrade)After completion, the device will automatically reboot.

9. RX Interface Introduction

EN

9.1 Main Interface

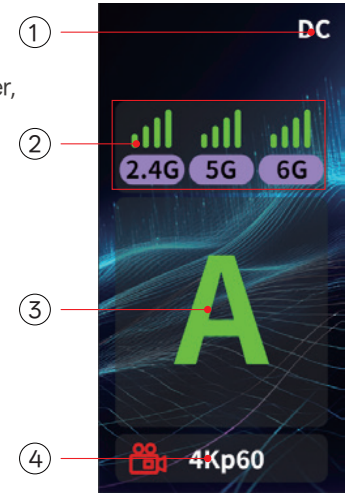

① **Battery Level/Power Indicator**
Displays battery icon when on battery power, shows "DC" when on wired power supply.

② **Wireless Operation Status**
Green: Frequency band enabled.
Gray: Frequency band disabled.

③ **Monitoring Position**
Current monitoring position of receiver, up to 4 positions can be set.

④ **Input Video Information**
Displays resolution and frame rate of received video, shows "NoSignal" when no input.

EN

9.2 WiFi Information Interface

Displays currently paired transmitter's 5GHz WiFi SSID.

9.3 System Settings Interface

This interface has one additional monitoring position setting compared to TX, others are identical.

Monitoring Position

9.4 Monitoring Position Settings

① Short press knob to enter system settings interface, locate monitoring position option, rotate knob to select camera number.

② Press knob to confirm, current camera number status will display in top bar.

10. UVC Monitoring

10.1 Type-C to Type-C

Connect to mobile devices via Type-C to Type-C cable, open USB camera software on mobile device for monitoring.

10.2 USB-A to Type-C

Connect to PC devices via USB-A to Type-C cable, open OBS software on PC for monitoring (supports streaming to third-party software for live broadcast).

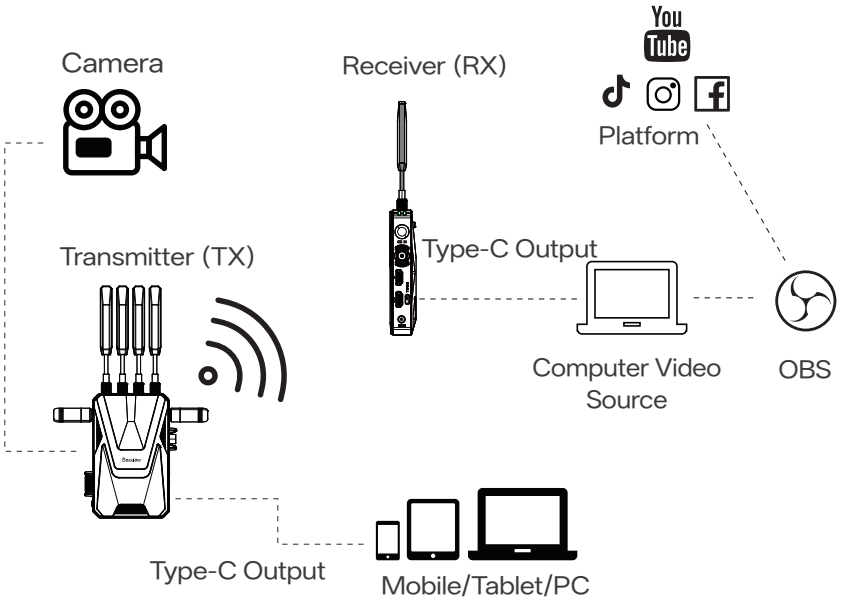

EN

11. Specifications

	Transmitter TX	Receiver RX
Frequency Range	2.4-2.4835GHz、5.18-5.825GHz、5.965-7.085GHz	
HDMI Video Formats	4Kp 60 / 4Kp 59.94 / 4Kp 30 / 4Kp 29.97 / 4Kp 24 / 4Kp 23.97 / 1080p 60 / 1080p 59.94 / 1080p 30 / 108p 29.97 1080p 25 / 1080p 24 / 1080i 60 / 1080i 50 / 720p 60 / 720p 50	
SDI Video Formats	1080p60/1080p59.94/1080p30/1080p29.97/1080p25/1080p24 1080i60/1080i50/720p60/720p50	
Audio Format	PCM	
HDMI Interface	HDMI 2.0	
HDCP Protocol	HDCP 1.4 \ 2.3	
Transmission Latency	35ms	
Video Encoding & Decoding	H.265	
Max Transmission Distance	3000 meters (No obstacles, no interference)	
Antenna	External	
Product Interfaces	HDMI Input / HDMI Loop-out SDI Input / DC IN Type-C	HDMI Output / SDI Output DC IN Type-C
Product Buttons	Power button, Return/Pairing button, Menu Knob	
Status Indicator Lights	Connection status light, Video signal light	
Display	1.05-inch full color LCD	
Power Supply	DC（7.4-24V）/ NP-F（6.4-8.4V）	
Cooling Method	Intelligent fan temperature control	
Product Dimensions (Excluding Antenna)	130×95×30mm	
Power Consumption	9W	7W
Operating Temperature	-10°C~45°C	
Storage Temperature	-40°C~60°C	
Weight (Excluding Antenna)	330g	330g

12. FAQ & Solutions

No Connection Between the Receiver and Transmitter

- Please confirm if the receiver and transmitter have been paired.
- Ensure antennas are properly installed.

No Video Display

- Check if video cable is connected to transmitter's input interface.
- Check if main interface displays video format info.
  If not, check HDMI cable or camera's SDI/HDMI output.
- Reconnect video input cable.

Abnormal Video Display

- Check if the video cable is connected.
- Reconnect video input cable.

Video Lagging

- Verify antenna installation.

13. Warranty Terms

EN

Warranty Coverage

- Within 15 days of receipt: Quality issues entitle you to replacement or free repair service.
- The wireless video transmission device has a one-year warranty from the date of receipt when used and maintained properly (accessories and cables have a 3-month warranty), and free repair service is provided during the warranty period.
- Keep the purchase receipt and user manual in a safe place.

Warranty Exclusions

- Beyond the warranty period (without receipt, calculated from production date).
- Damage from improper use/maintenance without the accordance of user manual.
- Unauthorized repairs/disassembly.
- Force majeure damages (fire, flood, lightning, etc.).

Service & Support

- Visit Desview website's FAQ section.
- Contact authorized dealers or call Desview hotline for consultation/repair.

Confirmation Signature (after reviewing terms):

EU DECLARATION OF CONFORMITY

Manufacturer:	Shenzhen Bestview Electronic Co. Ltd.
Address:	3/F & 5/F, Block 24, Longbi Industrial Zone, Ban tian Town, Longgang District, Shenzhen, China
EC REP European Representative	**Name:** Zhou's Jade Star UG **Email:** jadestar.eu@gmail.com **Address:** Brunnenallee 11A 14478 Potsdam Germany
Product Name:	Wireless Image Transmitter
Models:	Atlas X 4K
Trade Mark:	Desview
Place of Production:	China

We herewith declare that the above mentioned products complies with the relevant harmonization regulations of the EC Council. The following harmonized standards and technical specifications have been applied:

The EMC Directive 2014/30/EU	EN 55032 EN 55035
ROHS Directive 2011/65/EU and its amendment directives (EU) 2015/863	IEC 62321-3-1:2013 IEC 62321-5:2013 IEC 62321-4:2013+AMD1:2017 CSV IEC 62321-6:2015 IEC 62321-7-1:2015 IEC 62321-7-2:2017 IEC 62321-8:2017

CE

The "CE" mark indicates that this product complies with European regulations for product safety, health requirements, and environmental protection.

This symbol indicates the separate collection of electrical and electronic devices that become industrial waste in EU countries. Please do not dispose of such devices in household waste. Please use the return and collection systems in your country for the disposal of these products.

FCC Statement

This equipment has been tested and found to comply with the limits for a Class B digital device, pursuant to Part 15 of the FCC Rules.Any changes or modifications not expressly approved by the party responsible for compliance could void the user's authority to operate the equipment. These limits are designed to provide reasonable protection against harmful interference in a residential installation.This equipment generates, uses and can radiate radio frequency energy and, if not installed and used in accordance with the instructions, may cause

harmful interference to radio communications. However, there is no guarantee that interference will not occur in a particular installation. If this equipment does cause harmful interference to radio or television reception, which can be determined by turning the equipment off and on, the user is encouraged to try to correct the interference by one or more of the following measures:

-Reorient or relocate the receiving antenna.

Increase the separation between the equipment and receiver.

-Connect the equipment into an outlet on a circuit different from that to which the receiver is connected.

-Consult the dealer or an experienced radio/TV technician for help.

Radiation Exposure Statement

This device complies with FCC radiation exposure limits set forth for an uncontrolled environment and it also complies with Part 15 of the FCC RF Rules.T his equipment should be installed and operated with a minimum distance 20cm b etween the device and your body.

This device complies with part 15 of the FCC Rules. Operation is subject to the following two conditions: (1) This device may not cause harmful interference, and (2) this device must accept any interference received, including interference that may cause undesired operation.

Changes or modifications not expressly approved by the party responsible for compliance could void the user’s authority to operate the equipment.

Ins:
@desview

YouTube :
@desviewglobal

Facebook
@desviewglobal

Twitter
@DesviewGlobal

Shenzhen Bestview Electronic Co., Ltd

Address: Building 24, Longbi lndustrial City,No.27 Dafa Road, Bantian Street,Longgang District, Shenzhen, China.
Tel: +86 0755-28447130 Email: support@desview.com Website: www.desview.com

FR

www.desview.com