MODEL

CS-01

RECORD PLAYER

藍 牙 黑 膠 音 樂 播 放 機

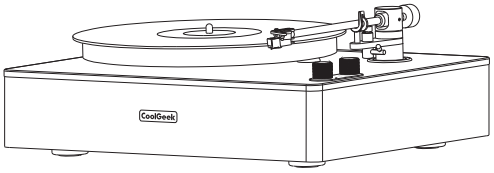

CoolGeek

Design & Living

WWW.COOLGEEKDESIGN.COM

警告

不要打開
防止觸電風險電擊，不要取下蓋子。
內部用戶可維修部件。
將服務轉介給合格的服務人員。

此符號提醒用戶產品外殼內存在未絕緣的“危險電壓”，其強度可能足以對人員構成觸電危險。

該符號旨在提醒用戶注意設備隨附文獻中存在的重要操作和維護（維修）說明。

重要安全說明

1.閱讀這些說明。

2.保留這些說明。

3.注意所有警告。

4.請勿在靠近水的地方使用本設備。

5.只能用乾布清潔。

6.不要堵塞任何通風口。按照製造商的說明進行安裝。

7.請勿安裝在任何熱源附近，例如散熱器、熱調節器、火爐或其他產生熱量的設備（包括放大器）。

8.不要破壞極化或接地型插頭的安全目的。極化插頭有兩個刀片，一個比另一個寬。接地型插頭有兩個刀片和第三個接地插腳。為您的安全提供寬刀片或第三爪。如果提供的插頭不適合您的插座，請諮詢電工以更換過時的插座。

9.僅使用製造商指定的附件/配件。

10.只能與製造商指定的或隨設備一起出售的推車、支架、三腳架、支架或桌子一起使用。使用手推車時，移動手推車/設備組合時要小心，以免翻倒造成傷害。

11.雷雨天氣或長時間不使用時，請拔掉本設備的插頭。

12.將所有維修交給合格的維修人員。當設備以任何方式損壞時需要維修，例如電源線或插頭損壞、液體濺入或物體掉入設備內、設備被雨淋或受潮、無法正常運行、或已被丟棄。

13.設備不得滴水或濺水，不得在設備上放置花瓶等裝滿液體的物品。

14.請勿將此設備安裝在書櫃或類似裝置中。

15.在待機/開啟開關處於待機位置的情況下，設備從交流電源插座汲取標稱的非工作電源。

16.設備應放置在離交流電源插座足夠近的位置，以便您隨時可以輕鬆抓住電源線插頭。

17.要完全斷開電源輸入，可以關閉後面板電源開關。

18.來自耳機和頭戴式耳機的過大聲壓會導致聽力損失。

19.電池不得暴露在陽光、明火等過熱環境中。

額外的安全建議

1.使周圍的物體距離設備至少四英寸，以保證足夠的通風。

2.設備上的通風口不應被報紙、布料、窗簾等物品擋住。

3.不要在設備附近放置明火源，例如點燃的蠟燭。

4.根據當地的安全和環境法規處理內部電子設備。

5.請勿在低於 36° F / 2° C 或高於 100° F / 38° C 的溫度下操作設備。

警告

•請勿移除外部外殼部件以暴露電子設備。內部沒有用戶可維修的部件。

•如果您在使用本產品時遇到問題，請聯繫 CoolGeek客戶支持。在產品修好之前，請勿使用該產品。

包裝清單 /01

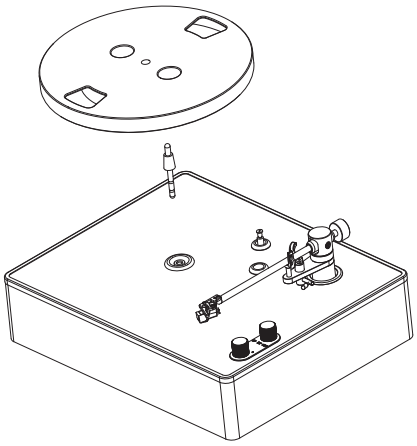

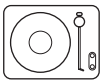

主機

轉盤

轉盤軸

轉盤墊

AC電源線

適配器

皮帶

說明書

機器說明 /02

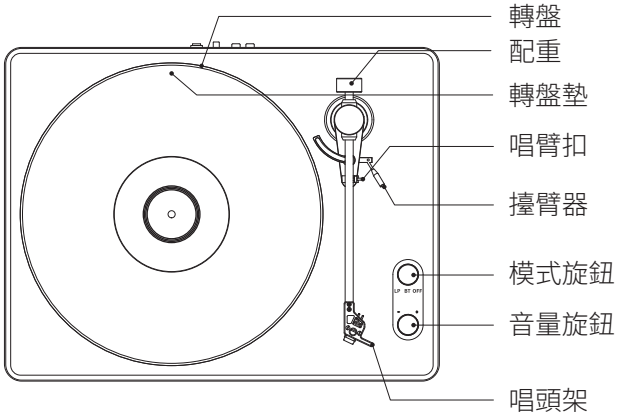
轉盤
配重
轉盤墊
唱臂扣
擡臂器
模式旋鈕
音量旋鈕
唱頭架
LP 33 OFF

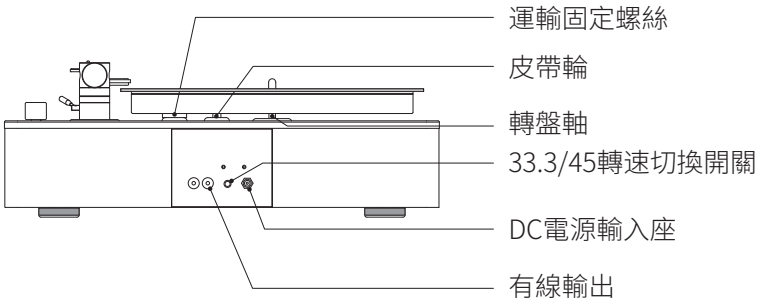
運輸固定螺絲
皮帶輪
轉盤軸
33.3/45轉速切換開關
DC電源輸入座
有線輸出

機器組裝 /03

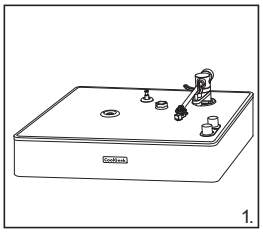

將機器從包裝箱裏依次
拿出放在平整的桌面上

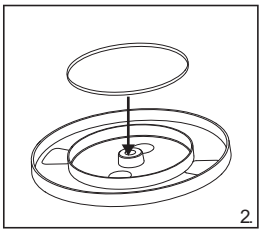

將皮帶裝在轉盤內圓上

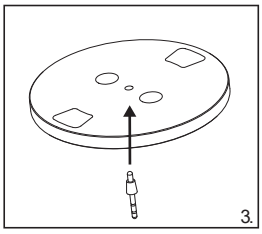

將轉盤軸裝進轉盤裏

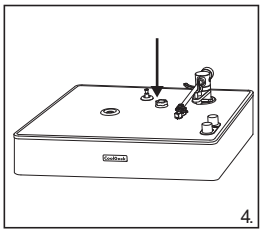

將運輸固定螺絲
(逆時針旋轉) 從機器上取下

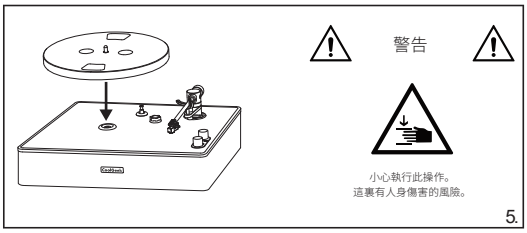

將轉盤裝在轉盤軸上

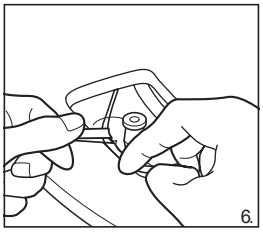

從轉盤安裝孔把皮帶
安裝在馬達皮帶輪座上

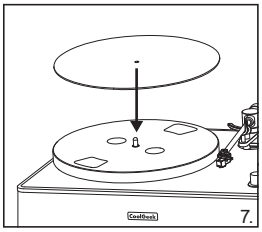

將黑膠墊平放在轉盤上

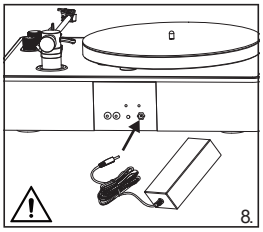

將適配器的DC頭
插進機器電源座上

使用說明 /04

1.將機器適配器AC電源線連接到電插頭上
DC插頭插在機器後面電源座子上（此時適配器上的燈亮）

2.將模式旋鈕置於BT，聽見提示音Bluetooth mode，使用如下
a.手機或藍牙播放設備上搜索藍牙名稱「CS-01」
b.點擊此名稱連接（連接成功後聽見提示音，）
c.點擊播放設備播放歌曲此時機器會播放出音樂

3.將模式旋鈕置於LP模式，聽見提示音Phono mode，黑膠播放順序如下
a.將黑膠放置在機器唱盤上
b.將唱臂扣松開，把唱臂移動到黑膠上
c.將機器後面自鎖按鍵彈起狀態就是33.3轉，按下為45轉
d.將擡臂器放下，唱針緩慢接觸黑膠，此時機器播放出美妙的歌聲
e.旋轉音量旋鈕調節音量大小

4.關閉黑膠播放順序如下
a.將擡臂桿擡起，使唱針離開黑膠表面
b.將唱臂放回到歇臂器位置
c.將模式旋鈕置於OFF
d.將黑膠裝進黑膠袋或黑膠架內

技術參數 /05

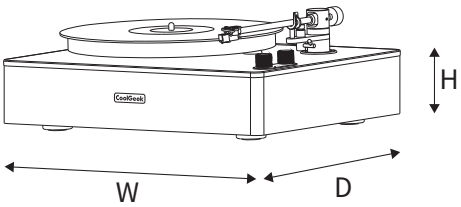

寬度(W)	432MM
深度(D)	337MM
高度(H)	155MM

产品技术规格

輸入電源	DC 24V/2A
高音單元	2 × 1”[8Ω/10W]
中低音單元	2 × 50105[6Ω/15W]
轉速	33-1/3rpm,45rpm
藍牙	5.0
功率放大器	30W+30W/8Ω
頻率響應	65Hz~20KHz
音頻輸出	RCA×1Group

唱臂技术规格

軸間距	200mm
有效臂長	219mm
超距	19mm
補償角	25.25°
唱臂最大失真	＜0.9%
內零點	R65.74
外零點	R121.1
針壓	2.5-3.5g

CoolGeek

極客科技有限公司
香港九龍尖沙咀東加連威老道94號明輝中心1209室

www.coolgeekdesign.com
email:marketing@coolgeekdesign.com

CoolGeek 是極客科技有限公司的註冊商標

CoolGeek 訂閱了一項持續改進的計劃。
因此，某些產品的安全性和特性可能會更改，恕不另行通知。

MODEL

CS-01

RECORD PLAYER

BLUETOOTH RECORD PLAYER

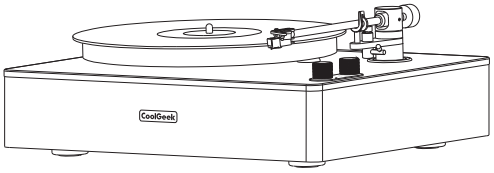

CoolGeek

Design & Living

WWW.COOLGEEKDESIGN.COM

WARNING

DO NOT OPEN
TO PREVENT THE RISK OF ELECTRIC SHOCK, DO NO REMOVE COVER. NO USER-SERVICEABLE PARTS INSIDE. REFER SERVICING TO QUALIFIED SERVICE PERSONNEL.

This symbol alerts the user to the presence of uninsulated “dangerous voltage” within the product’s enclosure that may be of sufficient magnitude to constitute a risk of electric shock to persons.

This symbol is intended to alert the user to the presence of important operating and maintenance (servicing) instructions in the literature accompanying the appliance.

Important Safety Instructions

1. Read these instructions.
2. Keep these instructions.
3. Heed all warnings.
4. Do not use this apparatus near water.
5. Clean only with dry cloth.
6. Do not block any ventilation openings. Install in accordance with the manufacturer’s instructions.
7. Do not install near any heat sources such as radiators, heat registers, stoves, or other apparatus (including amplifiers) that produce heat.
8. Do not defeat the safety purpose of the polarized or grounding-type plug. A polarized plug has two blades with one wider than the other. A grounding type plug has two blades and a third grounding prong. The wide blade or the third prong are provided for your safety. If the provided plug does not fit into your outlet, consult an electrician for replacement of the obsolete outlet.
9. Only use attachments/accessories specified by the manufacturer.
10. Use only with the cart, stand, tripod, bracket or table specified by the manufacturer, or sold with the apparatus. When a cart is used, use caution when moving the cart/apparatus combination to avoid injury from tip-over.
11. Unplug this apparatus during lighting storms or when not used for long periods of time.
12. Refer all servicing to qualified service personnel. Servicing is required when the apparatus has been damaged in any way, such as power supply cord or plug is damaged, liquid has been spilled or objects have fallen into the apparatus, the apparatus has been exposed to rain or moisture, does not operate normally, or has been dropped.
13. The apparatus shall not be exposed to dripping or splashing and that no objects filled with liquids, such as vases, shall be placed on the apparatus.
14. Do not install this apparatus in a bookcase or similar unit.
15. The apparatus draws nominal non-operating power from the AC outlet with its STANDBY/ON switch in the standby position.
16. The apparatus should be located close enough to the AC outlet so that you can easily grasp the power cord plug at any time.
17. To completely disconnect the power input, the rear panel power switch may be switched off.
18. Excessive sound pressure from earphones and headphones can cause hearing loss.
19. The battery shall not be exposed to excessive heat such as sunshine, fire or the like.

Additional Safety Advice

1. Keep surrounding objects at least four inches away from the apparatus for adequate ventilation.
2. Ventilation openings on the apparatus should not be impeded by such items as newspaper, cloths, curtains, and the like.
3. Do not place naked flame sources near the apparatus, such as lighted candles.
4. Dispose of internal electronics in accordance with local safety and environmental regulations.
5. Do not operate the apparatus at a temperature less than 36° F / 2°C or greater than 100° F / 38° C.

Caution

• DO NOT REMOVE THE EXTERNAL ENCLOSURE PARTS TO EXPOSE THE ELECTRONICS. NO USER SERVICEABLE PARTS ARE INSIDE.

• IF YOU ARE EXPERIENCING PROBLEMS WITH THIS PRODUCT, CONTACT CoolGeek CUSTOMER SUPPORT. DO NOT USE THE PRODUCT UNTIL IT HAS BEEN REPAIRED.

PACKING LIST /01

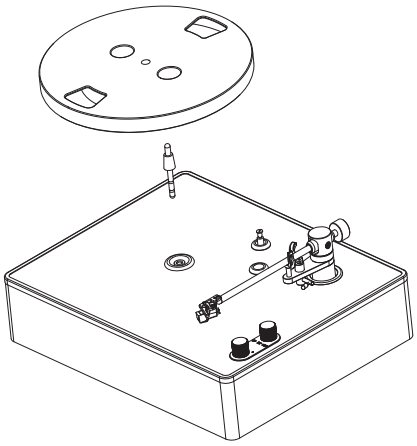

HOST

TURNTABLE

TURNTABLE SHAFT

TURNTABLE PAD

AC POWER CORD

ADAPTER

BELT

MANUAL

MACHINE DESCRIPTION /02

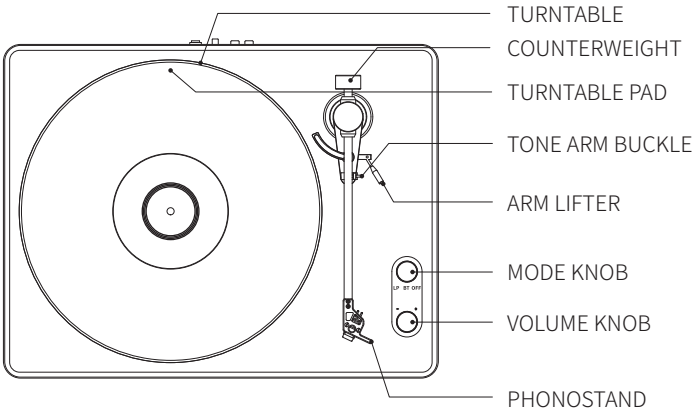

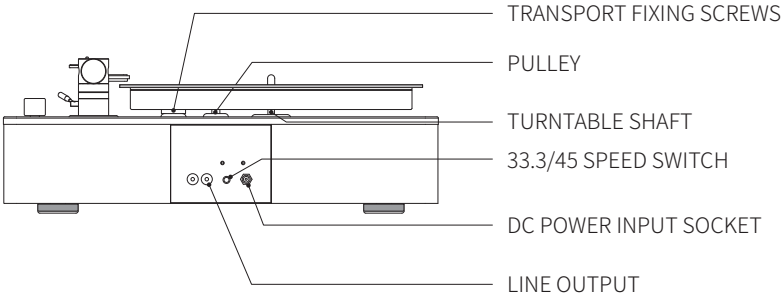

MACHINE ASSEMBLY /03

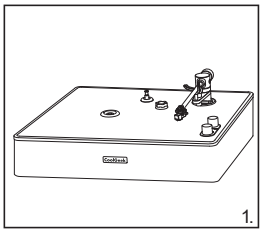

Place the machine on a flat table and take it out of the packing box in turn

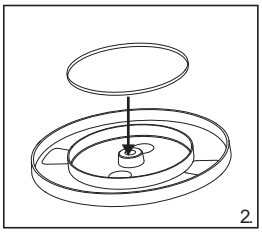

Install the belt on the inner circle of the rotary table

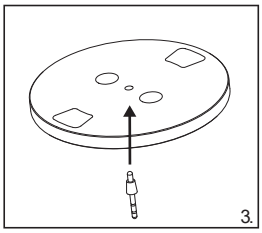

Install the rotary table shaft into the rotary table shaft seat

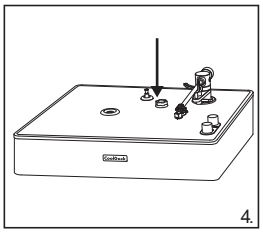

Remove the transport set screw (counterclockwise) from the machine

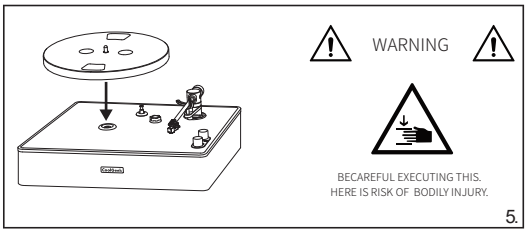

Install the rotary table on the rotary table shaft

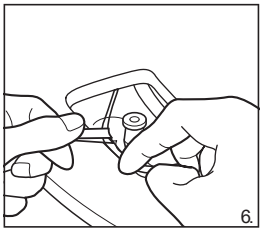

Install the belt on the motor pulley seat from the rotary table mounting hole

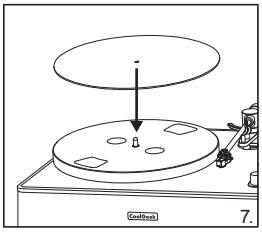

Place the black rubber pad flat on the rotary table

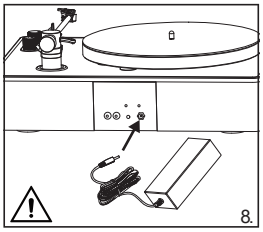

Insert the DC head of the adapter into the machine power base

INSTRUCTIONS FOR USE /04

1. Plug the AC power cord of the machine adapter and the DC plug into the power base at the back of the machine (the light on the adapter is on at this time)

2. Turn the mode knob to BT and hear the prompt tone Bluetooth mode. Use the following
a.Search the Bluetooth name "cs-01" on the mobile phone or Bluetooth playback device
b.Click Connect (a prompt tone is heard after the connection is successful,)
c. Click the play device to play songs, and the machine will play music

3. Turn the mode knob to LP mode, hear the prompt tone phono mode, and the playing sequence of black glue is as follows
a.Place the LP on the machine disc
b.Loosen the singing arm buckle and move the singing arm onto the LP
c.Pop up the self-locking button at the back of the machine and press 33.3 turns to 45 turns
d.Put down the arm lifter, and the stylus slowly contacts the LP. At this time, the machine plays music
e.Turn the volume knob to adjust the volume

4. Turn off the LP, and the playing sequence is as follows
a.Lift the arm lever so that the stylus leaves the surface of the LP
b.Put the singing arm back to the arm rest position
c.Turn the mode knob to off
d.Put the LP into the black bag or black glue rack

TECHNICAL PARAMETER /05

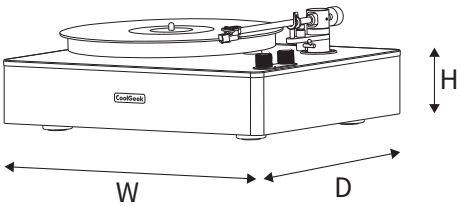

WIDTH(W)	432MM
DEPTH(D)	337MM
HEIGHT(H)	155MM

PRODUCT TECHNICAL SPECIFICATIONS

INPUT POWER	DC 24V/2A
TWEETER	2 × 1”[8Ω/10W]
MID-WOOFER	2 × 50105[6Ω/15W]
ROTATING SPEED	33-1/3rpm,45rpm
BLUETOOTH	5.0
POWER AMPLIFIER	30W+30W/8Ω
FREQUENCY RESPONSE	65Hz~20KHz
AUDIO OUTPUT	RCA×1Group

TONEARM TECHNICAL SPECIFICATIONS

AXIS SPACING	200mm
EFFECTIVE ARM LENGTH	219mm
OVER DISTANCE	19mm
COMPENSATION ANGLE	25.25°
MAXIMUM TONE ARM DISTORTION	＜0.9%
INNER ZERO	R65.74
OUTER ZERO POINT	R121.1
NEEDLE PRESSURE	2.5-3.5g

CoolGeek

GEEKS TECH CO.,LTD
FLAT/RM 1209 12/F INTER-CONTINENTAL PLAZA GRANVILLE ROAD 94 TSIM SHA TSUI EAST KL

WWW.COOLGEEKDESIGN.COM
EMAIL:MARKETING@COOLGEEKDESIGN.COM

COOLGEEK IS A REGISTERED TRADEMARK OF GEEKS TECH CO.,LTD

COOLGEEK SUBSCRIBES TO A PROGRAM OF CONTINUOUS IMPROVEMENT. AS A RESULT, SOME PRODUCT FEARURES AND CHARACTERISTICS MAY CHANGE WITHOUT PRIOR NOTICE.

MODEL

CS-01

RECORD PLAYER

蓝 牙 黑 胶 音 乐 播 放 机

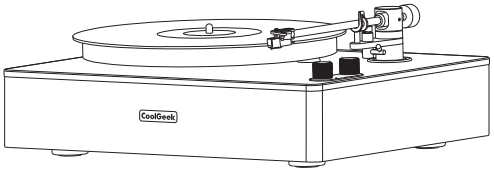

CoolGeek

Design & Living

WWW.COOLGEEKDESIGN.COM

警告

不要打开
防止触电风险电击，不要取下盖子。
内部用户可维修部件。
将服务转介给合格的服务人员。

此符号提醒用户产品外壳内存在未绝缘的“危险电压”，其强度可能足以对人员构成触电危险。

该符号旨在提醒用户注意设备随附文献中存在的重要操作和维护（维修）说明。

重要安全说明

1.阅读这些说明。

2.保留这些说明。

3.注意所有警告。

4.请勿在靠近水的地方使用本设备。

5.只能用乾布清洁。

6.不要堵塞任何通风口。按照制造商的说明进行安装。

7.请勿安装在任何热源附近，例如散热器、热调节器、火炉或其他产生热量的设备（包括放大器）。

8.不要破坏极化或接地型插头的安全目的。极化插头有两个刀片，一个比另一个宽。接地型插头有两个刀片和第三个接地插脚。为您的安全提供宽刀片或第三爪。如果提供的插头不适合您的插座，请谘询电工以更换过时的插座。

9.仅使用制造商指定的附件/配件。

10.只能与制造商指定的或随设备一起出售的推车、支架、三脚架、支架或桌子一起使用。使用手推车时，移动手推车/设备组合时要小心，以免翻倒造成伤害。

11.雷雨天气或长时间不使用时，请拔掉本设备的插头。

12.将所有维修交给合格的维修人员。当设备以任何方式损坏时需要维修，例如电源线或插头损坏、液体溅入或物体掉入设备内、设备被雨淋或受潮、无法正常运行、或已被丢弃。

13.设备不得滴水或溅水，不得在设备上放置花瓶等装满液体的物品。

14.请勿将此设备安装在书柜或类似装置中。

15.在待机/开启开关处于待机位置的情况下，设备从交流电源插座汲取标称的非工作电源。

16.设备应放置在离交流电源插座足够近的位置，以便您随时可以轻鬆抓住电源线插头。

17.要完全断开电源输入，可以关闭后面板电源开关。

18.来自耳机和头戴式耳机的过大声压会导致听力损失。

19.电池不得暴露在阳光、明火等过热环境中。

额外的安全建议

1.使周围的物体距离设备至少四英寸，以保证足够的通风。

2.设备上的通风口不应被报纸、布料、窗帘等物品挡住。

3.不要在设备附近放置明火源，例如点燃的蜡烛。

4.根据当地的安全和环境法规处理内部电子设备。

5.请勿在低于 36° F / 2° C 或高于 100° F / 38° C 的温度下操作设备。

警告

•请勿移除外部外壳部件以暴露电子设备。内部没有用户可维修的部件。

•如果您在使用本产品时遇到问题，请联繫 CoolGeek客户支持。在产品修好之前，请勿使用该产品。

包装清单 /01

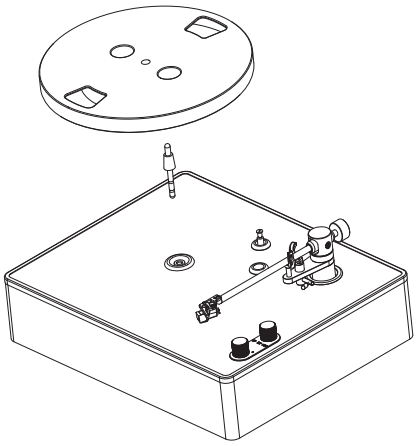

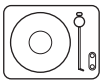

主机

转盘

转盘轴

转盘垫

AC电源线

适配器

皮带

说明书

机器说明 /02

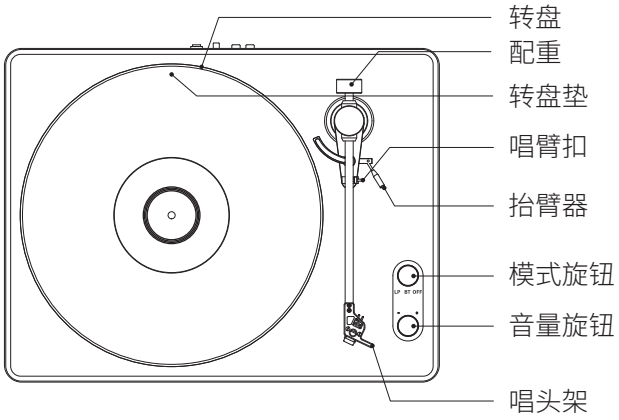
转盘
配重
转盘垫
唱臂扣
抬臂器
模式旋钮
音量旋钮
唱头架

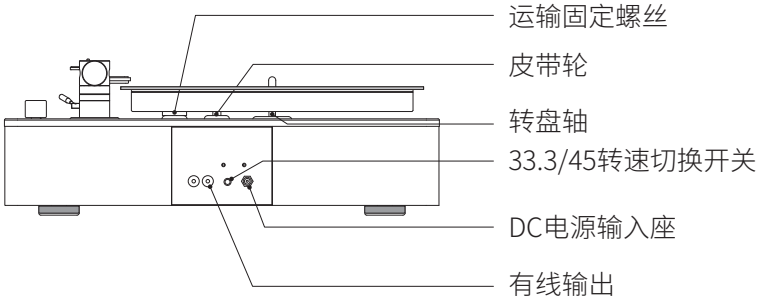
运输固定螺丝
皮带轮
转盘轴
33.3/45转速切换开关
DC电源输入座
有线输出

机器组装 /03

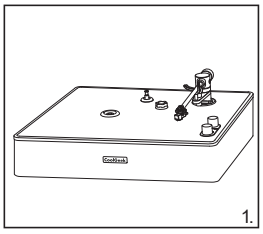

将机器从包装箱里依次
拿出放在平整的桌面上

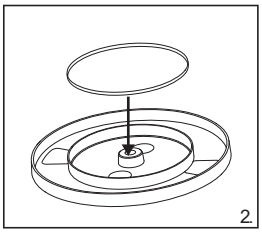

将皮带装在转盘内圆上

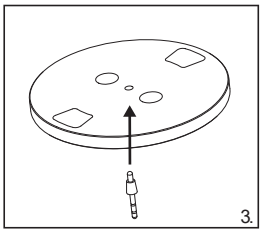

将转盘轴装进转盘里

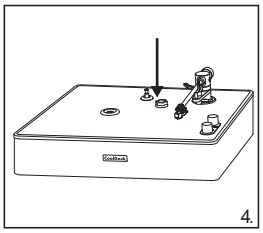

将运输固定螺丝
(逆时针旋转) 从机器上取下

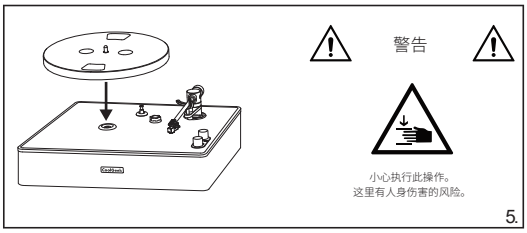

将转盘装在转盘轴上

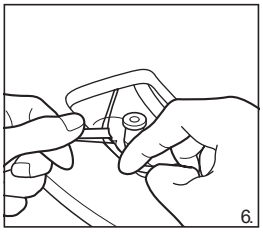

从转盘安装孔把皮带
安装在马达皮带轮座上

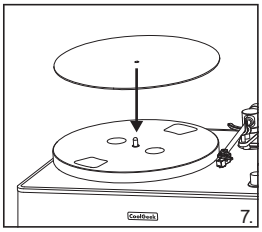

将黑胶垫平放在转盘上

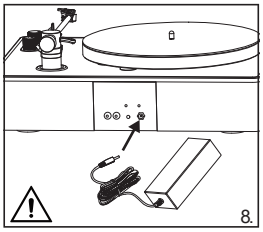

将适配器的DC头
插进机器电源座上

使用说明 /04

1.将机器适配器AC电源线连接到电插头上
DC插头插在机器后面电源座子上（此时适配器上的灯亮）

2.将模式旋钮置于BT，听见提示音Bluetooth mode，使用如下
a.手机或蓝牙播放设备上搜索蓝牙名称“CS-01”
b.点击此名称连接（连接成功后听见提示音，）
c.点击播放设备播放歌曲此时机器会播放出音乐

3.将模式旋钮置于LP模式，听见提示音Phono mode，黑胶播放顺序如下
a.将黑胶放置在机器唱盘上
b.将唱臂扣松开，把唱臂移动到黑胶上
c.将机器后面自锁按键弹起状态就是33.3转，按下为45转
d.将抬臂器放下，唱针缓慢接触黑胶，此时机器播放出美妙的歌声
e.旋转音量旋钮调节音量大小

4.关闭黑胶播放顺序如下
a.将抬臂杆抬起，使唱针离开黑胶表面
b.将唱臂放回到歇臂器位置
c.将模式旋钮置于OFF
d.将黑胶装进黑胶袋或黑胶架内

技术参数 /05

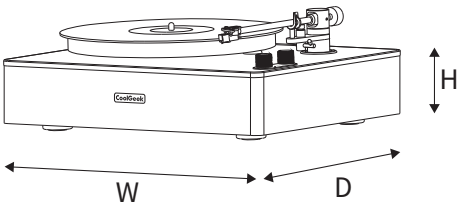

宽度(W)	432MM
深度(D)	337MM
高度(H)	155MM

产品技术规格

输入电源	DC 24V/2A
高音单元	2 × 1”[8Ω/10W]
中低音单元	2 × 50105[6Ω/15W]
转速	33-1/3rpm,45rpm
蓝牙	5.0
功率放大器	30W+30W/8Ω
频率响应	65Hz~20KHz
音频输出	RCA×1Group

唱臂技术规格

轴间距	200mm
有效臂长	219mm
超距	19mm
补偿角	25.25°
唱臂最大失真	＜0.9%
内零点	R65.74
外零点	R121.1
针压	2.5-3.5g

CoolGeek

极客科技有限公司
香港九龙尖沙咀东加连威老道94号明辉中心1209室

www.coolgeekdesign.com
email:marketing@coolgeekdesign.com

CoolGeek 是极客科技有限公司的注册商标

CoolGeek 订阅了一项持续改进的计划。
因此，某些产品的安全性和特性可能会更改，恕不另行通知。

FCC Warnning:

This equipment has been tested and found to comply with the limits for a Class B digital device, pursuant to part 15 of the FCC Rules. These limits are designed to provide reasonable protection againstharmful interference in a residential installation. This equipment generates, uses and can radiateradio frequency energy and, if not installed and used in accordance with the instructions, maycause harmful interference to radio communications. However, there is no guarantee thatinterference will not occur in a particular installation. If this equipment does cause harmfulinterference to radio or television reception, which can be determined by turning the equipmentoff and on, the user is encouraged to try to correct the interference by one or more of thefollowing measures:

- Reorient or relocate the receiving antenna.
- Increase the separation between the equipment and receiver.
- Connect the equipment into an outlet on a circuit different from that to which the receiver is connected.
- Consult the dealer or an experienced radio/TV technician for help.

Caution: Any changes or modifications to this device not explicitly approved by manufacturer could void your authority to operate this equipment.

This device complies with part 15 of the FCC Rules. Operation is subject to the following two conditions:

(1)This device may not cause harmful interference, and (2) this device must accept any interference received, including interference that may cause undesired operation.

This equipment complies with FCC radiation exposure limits set forth for an uncontrolled environment. This equipment should be installed and operated with minimum distance 0cm between the radiator and your body.