# Back-Clip Print-Scan All in One Device

User 's manual

BROCHURE

# Features

1. Built-in thermal printer, which can print tickets, menus, invoices, etc. It can replace the PDA handheld terminal, which is used in various industries. There are at most one set and a wide range of applications.
2. The built-in high-precision QR code scanning module can accurately scan various 1D/2D barcodes such as payment, commodities, labels, etc. It is suitable for commercial, retail, cashier, warehousing, logistics inventory and other industries.
3. Built-in Bluetooth module.
4. Compatible with Bluetooth and devices of Android, IOS, HarmonyOS and other systems.
5. Support a variety of third-party software printing, such as: takeaway software, printing software, cash register software.
6. Large-capacity 3000mAh battery, long-lasting battery life, continuous work, and longer standby time.
7. It is more convenient to carry and use. There is no need for ribbon, ribbon, ink, and it can be easily printed with thermal printing paper, which is efficient and convenient.

# Attention

1. Read this user manual carefully before using this product
2. The charging voltage of this product is 5V1A or 5V2A. Do not use a fast charger . Please make sure you are using the original cable from package
3. Copyright and Patent Rights
 This product and its accessories (including firmware, software, documentation, appearance, etc.) has applied for a number of patents, copyrights and software copyrights.
4. Our company reserves the right to make changes to any product to improve reliability, function or design. Our company shall not be liable for any liability arising out of or in connection with the application or use of any product, circuit, or other application
5. Accessories
 Standard： Back-Clip All in One Device 1 unit, Type-C 1 unit, User Manual 1 unit
6. The contents of this manual are subject to change without notice.

1.Appearance.....1-3
2.Printer Parameter.....4
3.Scanner Parameter.....5
5.Test Software Download.....6
6.Environment.....7
7.Regulations.....7
8.Programming code of Scanner.....8
8.1.Default Setting&Version Info.....8
8.2.Serial Port.....8
8.3.Baudrate.....8
8.4.Scan mode.....9
8.5.Encoding format.....10
8.6.Positioning light.....10
8.7.Illumination light.....11
8.8.Terminator.....11
8.9.Reverse code.....12-13
8.10.Case conversion.....13
8.11.Invoice mode.....13
9.SDK.....14
PrinterInstance .....14-15
Table .....16
Barcode .....17
CanvasPrint .....18
USB Master Mode can't find the USB device solution.....19
10.Disclaimer.....20

# 1.Appearance description：

Front：

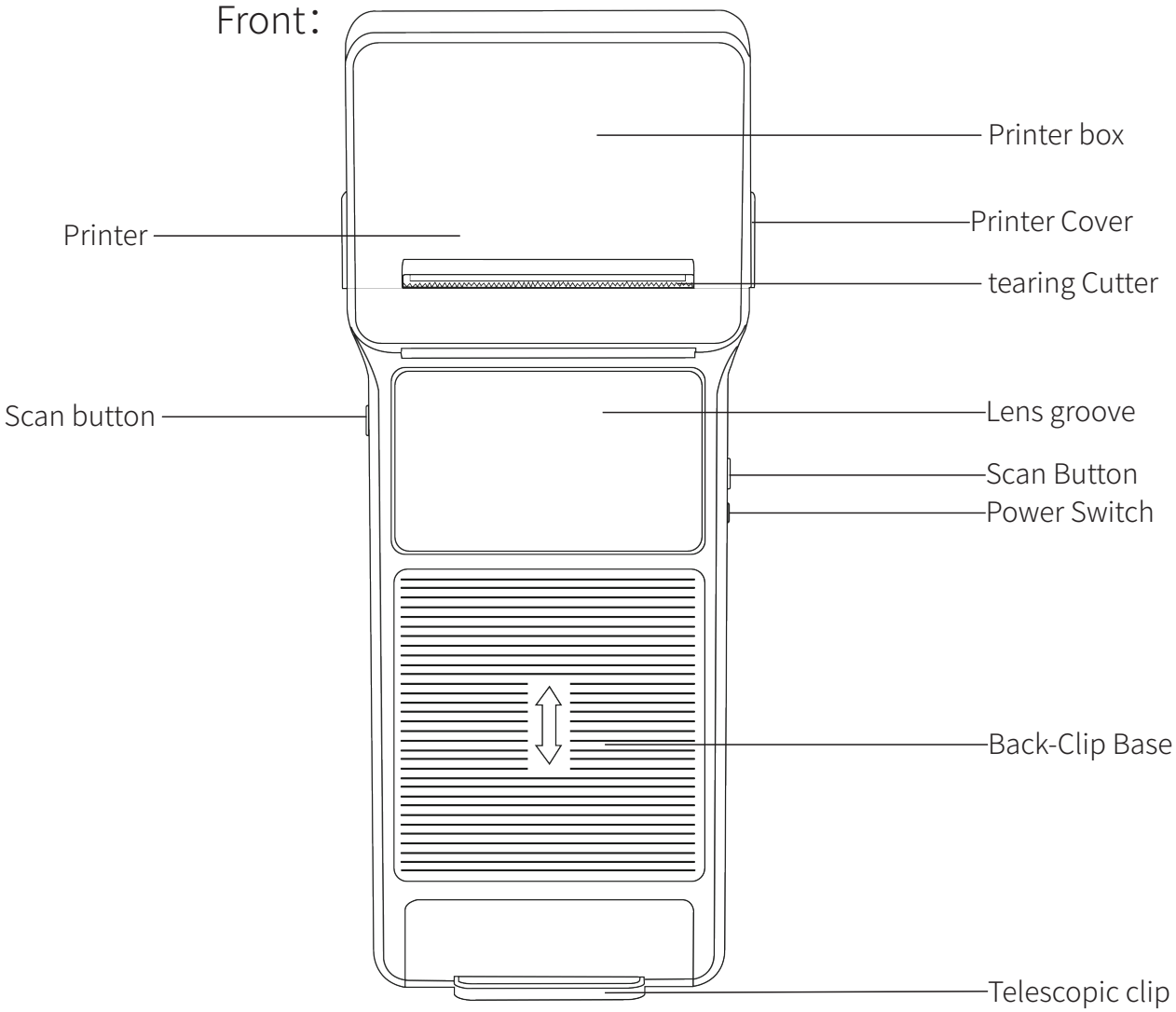


Power button: press and hold for 3 seconds to turn on/off, and tap to feed paper when turned on
Power off status：Press button for 3sec to power on (1 beep)
Power on status：Press button for 3sec to power off (3 beeps)
Power on status：Press button for 5sec to start self-print test
Scan Button：Press button to scan barcodes
Tearing Cutter：Tear the paper after feeding
Printer Cover：Open the printer and load paper roll
Printer box：Load57*40 Roll Paper
Printer：Thermal Printer, Print receipt
Lens Groove：To Make camera Better and more stable
Back-Clip Base：Compatible MAX size 6.7 inch phone
Telescopic clip：Max length 35MM

Printer：

Support 58mm thermal paper(57mm*40mm)
Open the printer through the printer cover on the printer (as shown in Figure 1)
Do not force open the paper tray to prevent the print head gear from being worn.

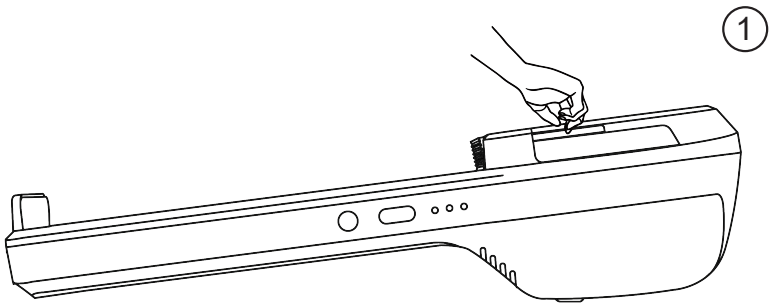


Follow the steps shown in the picture to load roll paper into printer box
Then pull out part of the paper from the outside of the tray
Tearing cutter(as shown in Figure 2), and close the paper (as shown in Figure 3)

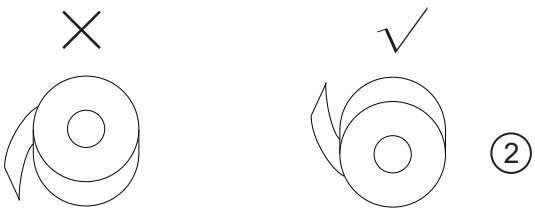


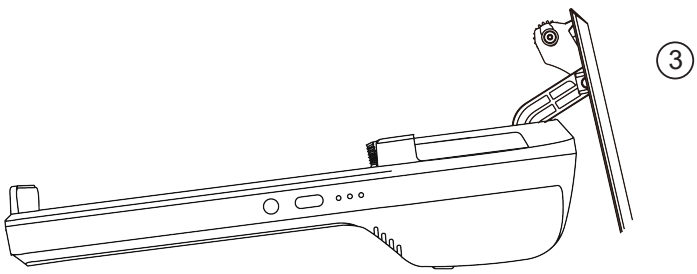


Attention：If the printer prints out paper without any words
Check that the orientation of the paper roll is not reversed.

# 2.Printer Parameter：

| | |
|---|---|
| Resolution | 203DPI |
| Print method | Thermal |
| Print speed | 3-5inch/sec |
| Print width | 48mm |
| Tear paper | Yes |
| Paper Roll | 57MMx40MM |
| Charging voltage | 5V |
| Communication | Bluetooth |
| Fonts | GBK or code page+ASCII (2MB) |
| Roll diameter | 40mm |
| English | ASCII9×17/12×24 |
| Print content | English,Chinese,Numbers,symbols,pictures,barcodes. |
| Working voltage: | DC7.4V，3.0A |
| 1D | CORD39 CORD128A/B/CEan13 |
| 2D | Printing as image |
| Contol panel | Power、FEED |
| Commands | ESC/POS |
| Black tag inspection | Support |
| Battery | 3000mAh/7.4V |
| Print time | Standby≥30days |
| RAM | 8K |

# 3.Scanner Parameter：

| | | |
|---|---|---|
| Performance | Sensor | 640×480 CMOS |
| | Illumination | White LED |
| | Focus Decode | Red LED |
| | Capability | 2D:QR Code、Micro QR、Data Matrix 、<br>PDF417 Code 128、EAN-13 、EAN-8、UPC-E、<br>UPC-A、ISBN、ISSN、Code11、<br>1D：ITF-25（Interleaved 2 0f 5）、Code39、<br>Code93、Code32、Codabar Matrix 2 of 5、<br>Industrial 25、IATA 25、MSI Plessey<br>Code93、Codabar |
| | Resolution | ⩾5mil |
| | Scan of depth | EAN-13 45mm-269mm (13mil 13 Byte)<br>Code39 35mm-119mm (5mil 7 Byte)<br>Code128 43mm-310mm (13mil10 Byte)<br>QR Code 19mm-185mm (15mil 30 Byte)<br>Data Marix 45mm-116mm (10mil30 Byte)<br>PDF 417 40mm-105mm (6.67mil 30 Byte) |
| | Print contras | ⩾10% |
| | Scan angle | rotate 360°, elevation ± 55°, deflection ± 55 |
| | field of view | orizon 36°, Vertical 27° |
| Mechanical parameters | Working Voltage | DC 3.3V |
| | Working Current | 150mA |
| | Power consumptio | 750mW |
| | Standby Current | 70mA |

# 5.Test Software Download

Pls download software from below website:
https://www.pgyer.com/V6YR
Or scan below QR code to download software
(Currently,Support Android system only)

(software)

1.Turn on Bluetooth, search for Barcode+Printer BT and click it to connect with your phone.
2.After connected successfully→Run software →
Click Bluetooth option“Open connection (Bluetooth)”
→Click Barcode+Printer BT→It can be used after connected successfully。

SDK can be downloaded from below website:
https://share.weiyun.com/MMzfcghP
Or scan below QR code to download software

(SDK)

# 6.Environment：

Working temp：32°F to 104°F/0°C to 40°C
Storage temp：-40°F to 140°F/-40°C to 55°C
Humidity： 5%-95% (non-condensing)
drop specification：1.5 meter fall drop to concrete
Ambient light anti-winding ability：It will not be affected by normal office and factory lighting or direct exposure to sunlight
Electrostatic discharge: meet the requirements of 15kV air discharge and 8kV contact discharge

# 7 Regulation

L1950、CSA C22.2 No.950、
EN60950/IEC950 EMI/RFI:FCC Part 15 Class B、
European Union EMC Directive、Taiwan EMC、
Environment： Compliance RoHS directive 2002/95/EEC

# 8.Programming code：

## Default Setting&Version info

Factory default

Version info

## Serial interface

Serial port

## Baudrate

4800

9600

115200

## Scan Mode

In this mode, trigger the scan by pressing the key

Manual mode

In sensing mode, the scan module will monitor the captured image, output the information after reading successfully, and re-enter the state of monitoring scene changes.

Sensing mode

The scanning device will always be in working state。

Continuous mode

# Encoding format

*Output GBK

Output UTF8

Output UNICODE

data output

# Positioning light

Normal: The aiming light flashing during scanning only
Always on: The aiming light is always in working state
Always off: The aiming light is always off.

Normal

Always off

Always on

# Illumination

Normal: The light will be turned on when scanning only
Always on:The light will be turned on always when device power on
Always off: The light always off

Normal

Always off

Always on

# Terminator

Add terminator

Cancel terminator

Add CR

Add CR+LF

Note: You need to turn on the add terminator before adding a carriage return or carriage return + line feed

# Reverse Setting

Enable All reverse code

Disable All reverse code

Enable 1D revese code

Disable 1D revese code

Enable PDF417 reverse

Disable PDF417 reverse

Enable DM reverse

Disable DM reverse

Enable QR reverse

Disable QR reverse

## case conversion

*Normal

Case inversion

Capslock

All lowercase

## Invoice mode

*Enable

Disable

# 9.SDK

## Class “PrinterInstance” provides the following method:

a) //use BluetoothDevice
PrinterInstance(Context context, BluetoothDevice bluetoothDevice, Handler handler)
b) //use UsbDevice
PrinterInstance(Context context, UsbDevice usbDevice, Handler handler)
c) //use wifi address and port number
PrinterInstance(String ipAddress, int portNumber, Handler handler)
Handler: use for receive connect state change. Use constant value:
PrinterConstants.Connect.SUCCESS;
PrinterConstants.Connect.FAILED;
PrinterConstants.Connect.CLOSED;
2. Open and close connection：
a) openConnection() open connection.
b) closeConnection() close connection.
3. Common method：
a) Init printer.
init()
b) Print common text.
printText(String content)
c) Send byte data.
sendByteData(byte[] content)\
user can use this method send command to printer if the SDK don’t provide the
method in printer development document, such as：
byte[] command = new byte[3];
command[0] = 0x1B;
command[1] = 0x31;
command[2] = 49;
sendByteData (command);
d) Print image.
bitmap is image；left is left margin；multiple is stylus printer multiple for zoom in.
printImage(Bitmap bitmap);
printImage(String bitmap, int left);
printImage(Bitmap bitmap, int multiple);
printImage(String bitmap, int left, int multiple);
e) Print table. Use Table class set table data.
printTable(Table table)
f) Print barcode. Use Barcode class to set barcode data.
PrintBarCode(Barcode barcode)

g) Cut pager
cutPaper()
h) Ring buzzer, param is ring time
ringBuzzer(byte time)
i) Open cashbox
openCashbox(boolean cashbox1, boolean cashbox2)
4. Set method：
a) Set character encoding of print text.
setEncoding(String encoding)
b) Set character width and height. x is width, y is height. 0<=x,y<=7, default is 0.
setCharacterMultiple(int x, int y)
c) Set left edge distance of print area, usually nH value is 0.
setLeftMargin(int nL, int nH)
d) Set print model.
setPrintModel(boolean isBold, boolean isDoubleHeight, boolean isDoubleWidth, boolean isUnderLine)
isBold：bold
isDoubleHeight：double height.
isDoubleWidth：double width.
isUnderLine：under line.
e) Set printer (Command constant start with "PrinterConstants.Command."
setPrinter(int command)
INIT_PRINTER：init printer( equal to method init() )
WAKE_PRINTER：wake up printer
PRINT_AND_RETURN_STANDARD：page model print and return to standard
PRINT_AND_NEWLINE：print and move to next line.
PRINT_AND_ENTER：print and enter.
MOVE_NEXT_TAB_POSITION：move to the position of next tab.
DEF_LINE_SPACING：restore default line space.
setPrinter(int command, int value)
PRINT_AND_WAKE_PAPER_BY_LNCH：
print and wake paper "value" height (lnch) ....
PRINT_AND_WAKE_PAPER_BY_LINE：print and wake paper "value" lines
CLOCKWISE_ROTATE_90：clock wise rotate 90degree, 0-false， 1-true
LINE_HEIGHT：Set line height
CHARACTER_RIGHT_MARGIN：Set character right margin
ALIGN：Align model. Three model' s const value is：
ALIGN_LEFT: left margin
ALIGN_CENTER: center margin
ALIGN_RIGHT: right margin

Table class

1. Table construct.

Table(String column, String regular, int[] columnWidth)

Parameter column is table title column, separate by the regular. Such as:" index, unit price, number, price" .

Parameter regular: the separator of the column data. Such as" ," .

Parameter Column width: width of all columns. One Chinese character width is 2, one English character is 1.

2. Add a row data.

addRow(String row)

Add a row data to the table. Data form should equals with table title. If the table cell width exceeds the limit, printer can word wrap, if want manual line, can add "\n" in where you want.

3. Set Table column align left. Default is aligning right.

setColumnAlignLeft(boolean left)

Barcode class
1. Construct:
Barcode(byte barcodeType)
Barcode(byte barcodeType, int param1, int param2, int param3)
Barcode(byte barcodeType, int param1, int param2, int param3， String content)
i. barcodeType is barcode type.
Constant start with “PrinterConstants.BarcodeType.”:
One-dimensional: UPC_A， UPC_E， JAN13， JAN8， CODE39，
ITF， CODABAR， CODE93， CODE128。
Two-dimensional： PDF417，DATAMATRIX，QRCODE。
ii. param1，param2，param3 are barcode param s：
Bar Code type is One-dimensional：
param1：bar code width, 2<=n<=6，default is 2.
param2：bar code height, 1<=n<=255，default is 162.
param3：bar code note position, 0-don’t print, 1-above,2-below,3-both.
Bar Code type is Two-dimensional：
a) PDF417
param1：The characters per line，1<=n<=30。
param2：Error correction level，0<=n<=8。
param3：Longitudinal magnification。
b) DATA MATRIX
param1：height，0<=n<=144(0:auto select)。
param2：width，8<=n<=144(when param1 is zero, param2 Invalid)。
param3：Longitudinal magnification。
c) QR CODE
param1：Graphical version，1<=n<=30(0:auto select)。
param2：Error correction level，
n = 76,77,81,72(L:7%,M:15%,Q:25%,H:30%)。
param3：Longitudinal magnification。
iii. Content is barcode data.

CanvasPrint class

1. Init CanvasPrint, Parameter is PrinterType. If use this method. The canvas was init to max width. Such as T9, the width is 72mm.

init(PrinterType printerType)

2. Set font property. Parameter is a FontProperty type,

setFontProperty(FontProperty fp)

FontProperty is a collections of font property. User can call method of setFont() to set detail property.

If don’ t use this method, you also can use the following method:

setLineWidth(float w) set paint width.

setTextSize(int size) set text size.

setItalic(boolean italic) set whether italic.

setStrikeThruText(boolean strike) set whether strikethrough.

setUnderlineText(boolean underline) set whether under line.

setFakeBoldText(boolean fakeBold) set fake bold.

3. Draw text on the canvas. Parameters x and y is text coordinate in the left bottom corner. Y must greater than 0.

drawText(String nStr)

drawText(float x, String nStr)

drawText(float x, float y, String nStr)

4. Draw a line. Parameters startX, startY is start coordinate; stopX， stopY is end coordinate.

drawLine(float startX, float startY, float stopX, float stopY)

5. Draw a rectangle. Parameters are the distance of edge to the left and top.

drawRectangle(float left, float top, float right, float bottom)

6. Draw an ellipse. Parameters is coordinate of edge which a bounding rectangle of the ellipse.

drawEllips(float left, float top, float right, float bottom)

7. Draw an Image. “image” is bitmap file of image.

drawImage(Bitmap image);

drawImage(float left, Bitmap image);

drawImage(float left, float top, Bitmap image);

8. Get the canvas image. Return a bitmap.

getCanvasImage();

9. Set text aligns right. Against the special language. Such as Arabic.

setTextAlignRight(boolean alignRight);

10. Set print new line if the text exceeds the valid width.

setTextExceedNewLine(boolean newLine);

11. Avoid a word was split to Independent letter. Default is space.

setUseSplit(boolean useSplit);

setUseSplitAndString(boolean useSplit, String splitStr);

# Enable USB Host API support

1. adb pull /system/etc/permissions/tablet_core_hardware.xml
2. Update that file and create android.hardware.usb.host.xml as specified by
Greg-q.
android.hardware.usb.host.xml contains the following lines:
<permissions>
<feature name="android.hardware.usb.host"/>
</permissions>
3. adb push android.hardware.usb.host.xml /system/etc/permissions
4. Push handheld_core_hardware.xml or tablet_core_hardware.xml to permissions:
adb push tablet_core_hardware.xml /system/etc/permissions
5. Reboot.

# 10、Disclaimer

The company does not assume any responsi□bility for losses caused by natural disasters (such as earthquakes, floods, etc.) that exceed our ability to act.

The company is not responsible for any product liability associated with or arising from the application or use of any product, circuit, or other application described herein.About the system, equipment, machinery, materials, methods or processes that may be used in this product, or any combination with this product, the company does not express, imply, estoppel permission in any other means in connection with a patent or patent. The company only provides implied licenses for the equipment, circuits and subsystems included in its products.

The company does not assume any responsi□bility for the loss caused by improper use of communication hardware or software not speci□fied.

The company does not assume any form of guarantee and technical support responsibility for third-party software used by this product.

This device complies with Part 15 of the FCC Rules. Operation is subject to the following two conditions: (1) this device may not cause harmful interference, and (2) this device must accept any interference received, including interference that may cause undesired operation

NOTE: This equipment has been tested and found to comply with the limits for a Class B digital device, pursuant to Part 15 of the FCC Rules. These limits are designed to provide reasonable protection against harmful interference in a residential installation. This equipment generates, uses and can radiate radio frequency energy and, if not installed and used in accordance with the instructions, may cause harmful interference to radio communications. However, there is no guarantee that interference will not occur in a particular installation.
If this equipment does cause harmful interference to radio or television reception, which can be determined by turning the equipment off and on, the user is encouraged to try to correct the interference by one or more of the following measures:
-- Reorient or relocate the receiving antenna.
-- Increase the separation between the equipment and receiver.
-- Connect the equipment into an outlet on a circuit different from that to which the receiver is connected.
-- Consult the dealer or an experienced radio/TV technician for help.

Warning: changes or modifications not expressly approved by the party responsible for compliance could void the user's authority to operate the equipment