Shenzhen Aozhixin electronic technology electronic Co., LTD

SPECIFICATION FOR FLASHLENS

★Customer:	Shenzhen Jinzhzhuo Technology Co., LTD
★Customer item:	
★Product model:	W218
★Description:	W218 Single coil assembly
★Code	MnZn
★Samples Q'ty:	3PCS
★Issue Date:	2026.08.28

Revision resume	Version	Revise Date	Revise Contents
	VH-12	2026.08.28	New order

★（CUSTOMER CONFIRM）	
	Date of Receipt:
	Received by:

	★he company confirmation column (supplier)			
	quality	Research and Development Department		
	QE Audit CheckedBy	Approved	Checked By	Prepared By
				Cao Hengbing

Quality policy, enterprising innovation, excellence, the pursuit of excellence.

Form Number: Edition

SPECIFICATION FOR APPROVAL

Customer Admit	Customer	Shenzhen Jinzhzhuo Technology Co., LTD
	Cust P/N	
	Name	W218 Single coil assembly
	Part No	40.0＊20.5＊0.08＊80P＊11TS, G42.5＊5.3＊1.0mm, double slot, central column 20 ＊ 1.0mm, lead wire 190MM, back adhesive
	Date	2026/08/28
	Version	VH-12
	Design By	Cao Hengbing
	Check.By	
	Approve By	

Shenzhen Aozhixin Electronic Technology Co., Ltd.

4th Floor, Building 4, Siliantang Industrial Zone, Henggang Street, Longgang District, Shenzhen City

TEL: 13537650008
E-MAIL:augus333@126.com

www.szaozhixin.com

Shenzhen Aozhixin electronic technology electronic Co., LTD

一、Sample Submission Reason

[√] 1.New SPEC [ ] 2.New Material [ ] 3.ECR [ ] 4.Improve the packaging.

二、Request For New SPEC.

Rev.	Before Change	After Change	Change Date	Approved By

Shenzhen Aozhixin electronic technology electronic Co., LTD

三、Remark:

3.1 Above product comply to li yin Environmental material system requirement.

3.2 In Event Of No Sign Back,We Will Under Take P.O. As Acceptance To Sample Approval!

四、Product Specification

4.1 (Unit: mm)

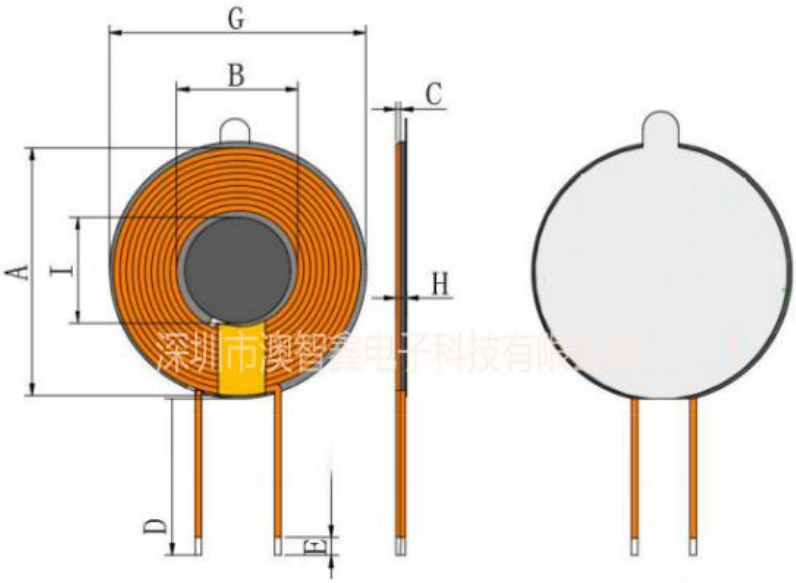

A	40.5±0.8
B	20.5±0.5
C	1.07±0.05
D	190±4.0
E	3±2.0
G	42.5±0.6
I	20.0±0.5
H	2.35 ± 0.15 Disglossy Paper

Notes:

1. Single coil of silk-covered wire
2. Wrap 4-6mm (width) of polyimide tape 1.5Ts at the outlet position
3. The coil body should not be loose and there should be no gap larger than 1/3 of the wire diameter
4. The small magnetic sheet should be attached to the center position of the coil
5. The end wire is allowed to be outside the slot and can be received
6. The surface of the magnetic sheet should be shiny, with uniform color, and there should be no dust or magnetic powder that affects the film application or adhesive
7. Double-sided adhesive is attached to the back of the magnetic sheet

4.2 SCHEMATIC DIAGRAM:

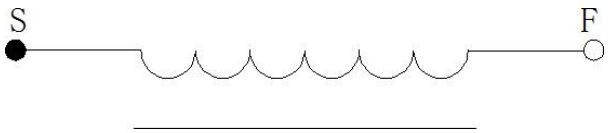

4.3 Winding Specification:

NO.	TERMINAL		WIRE	Turns	Winding Direction
1	S	F	silk-covered wire0.08*80P	11Ts	CCW

4.4 ELECTRICAL CHARACTERISTICS:

TEMPERATURE:25±10° C, RELATIVE HUMIDITY:65±20%

NO.	ITEM	TERMINAL	SPECIFICATION	TEST FREQUENCY	TESTEQUIPMENTS
1	LS	S-F	8.1uH±5%	100KHz/1.0V	TH2830
2	Q	S-F	65typ	100KHz/1.0V	TH2830
3	DCR	S-F	72mΩ±10%		ZX5512B

Shenzhen Aozhixin electronic technology electronic Co., LTD

五：Material Characteristics:（attached）

5.1 MAIN PARAMETERS

NO	Parameters	Code Name	Units	Test conditions		BP40
1	Initial penrmeability	Ui	\	25℃		2300±25%
2	Saturation flux density	Bs	mT	H=1194A/m	25℃	510
					100℃	390
3	Pcv Power Loss	Pc	Kw/m³	25℃,100kHz,200mT		650
				100℃,100kHz,200mT		450
4	Curie temperature	Tc	℃			≥215
5	Density	d	Kg/m³			4.8×10^3

5.2 Material Characteristics Curve

Pcv—T

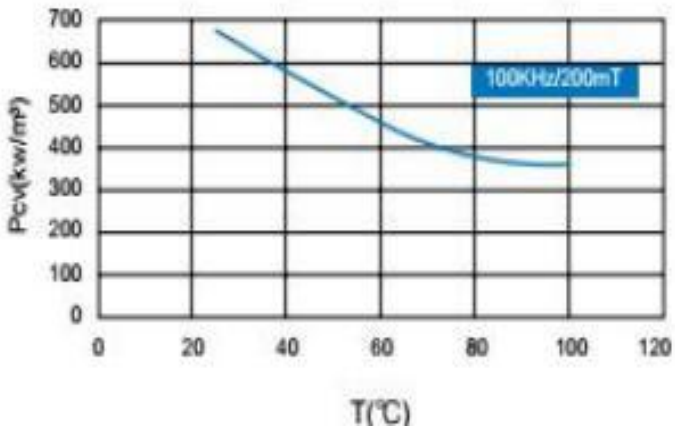

μi—T

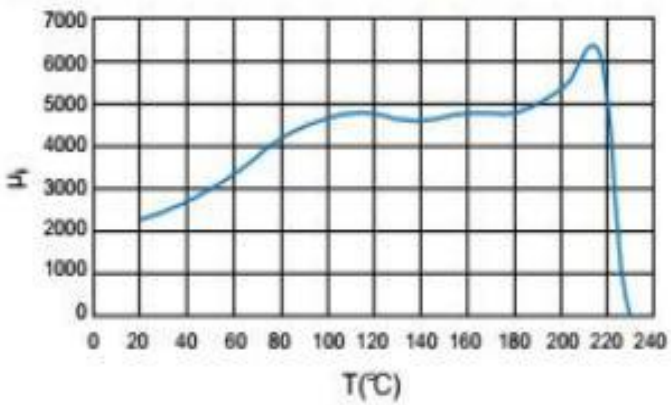

Bs—T

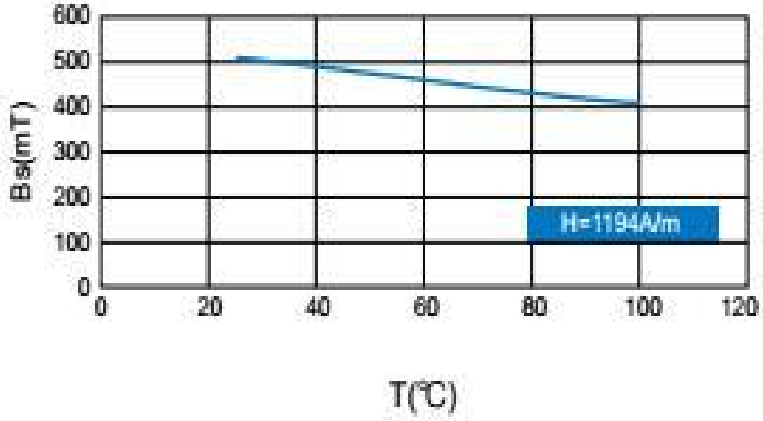

5.3 Appearance Size :AQL= 1.0/ Electrical performance (L) :AQL=0.65

① Cleaning: the surface of the magnetic disc luster, uniform color, smooth, no obvious loose phenomenon. The surface of the magnetic disc shall not have dust or magnetic powder that affects the film or glue Present.

② magnetic disc block, damage: the allowable standard for each damage is length ≤5mm, width ≤1.0mm, depth ≤ 0.5mm, and the interval between each two damage places is 1mm
The determination of the inside is a damage, and each product is allowed to accept 3 damages within this standard.

③ Crack: The magnetic core is only allowed to exist two long less than 5mm, width less than 0.5mm of the non-obvious crack exists, is not allowed to affect the magnetic core electromagnetic performance and Mechanical strength cracks and lamination.

④ Yin and Yang surface: the size is not inspected within the tolerance range.

⑤ Crystal spot, bright spot: grinding surface crystallization ≤2m, the number of single sides < 3.m2

⑥ Surface flatness: the surface allows concave and convex depth ≤0.08mm (in principle, it is not allowed to have obvious line marks).

⑦ Mechanical strength: ≥1kg (Instrument: DSZ-500N pressure gauge)

Shenzhen Aozhixin electronic technology electronic Co., LTD