制作要求
此页不印刷

成品尺寸：142x210mm
展开尺寸：284x210mm
钉装：骑马钉
材质：铜版纸

版本：V1-20211013

G1000

USER MANUAL

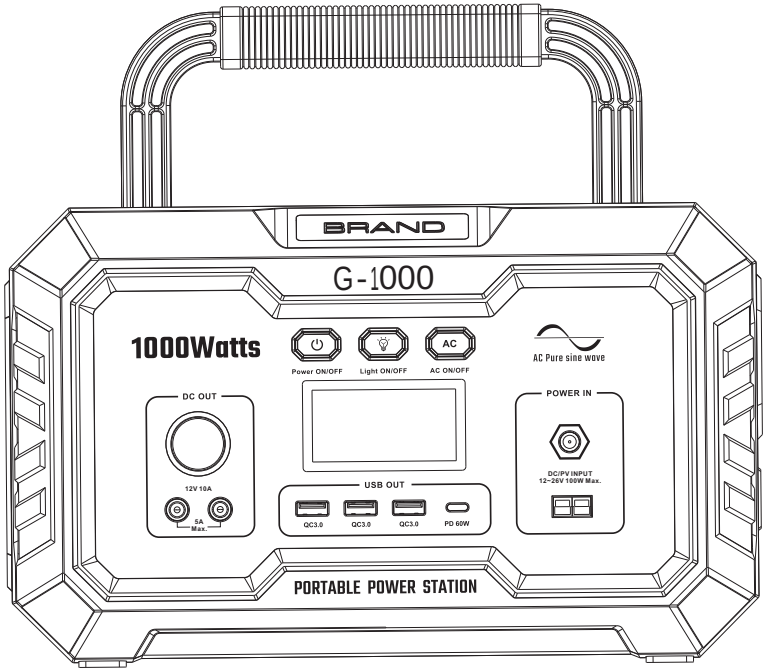

Thank you for purchasing G1000 portable power station

To make sure your personal safety, property security and user experience, please read this manual carefully before operating,and retain it for future reference.

⚠ CHARGE FIRST!

Before using your new Power Station G1000, plug it into a suitable power outlet until it is fully charged.Then you can start your exciting journey with it.

General specifications

General specs

Rated capacity	999Wh
Weight (net weight)	≈8.2kg/18.08lbs
Weight (including accessories)	≈9.8kg/21.6lbs
Product size	319×192×193mm

Input

Recharging input voltage	12-26V
AC/DC adapter	AC 100-240V (50Hz/60Hz), DC 24V, 6.25A
Solar charge input	12-26V, 150W max.
Car charger	DC 12V, 120W max.

Output

AC output voltage	110V/60Hz	
Rated AC output power	1000W	
Output waveform	pure sine wave	
Overload protection power	1100±80W	
Cigarette lighter socket output	recommend the load of car output is less than 100W per port	Total: 10A max.
DC 5525 output ×2	recommend the load of output is less than 50W per port	
Wireless charger	10W	
USB-A output ×3	5V 3A, 9V 2A, 12V 1.5A, 18W max.	
USB-C output	5V/9V/12V/15V/20V 3A DC, 60W max.	

Battery

Standard capacity of cells	22.2V 45Ah, 999Wh
discharging temperature	14 to 113°F (-10 to 45°C)
Recharging temperature	32 to 104°F (0 to 40°C)

Safety instructions

Read the following instructions to ensure safety before using.
Improper use may result in fire, property damage or personal injury.

Product use:

- **DO NOT** use any inappropriate power cords.
- **DO NOT** place the unit close to or in a fire on expose it to heat. Keep out of direct sunlight.
- **DO NOT** charge, use or store the unit in a bathroom or in an area exposed to rain or moisture. Do not drop the unit into the water. If the battery in the unit comes into contact with water, it may cause chemical decomposition of the battery. This may cause the battery to catch fire or explode.
- Never use or charge swollen, leaky, or damaged batteries. If your battery is abnormal, contact us to get support.
- Never install or remove a battery from the unit when it is turned on.
- **DO NOT** use the batteries in strong electrostatic or electromagnetic environments. Otherwise, the battery control board may malfunction and cause a serious accident.
- Never disassemble or pierce the product in any way. Otherwise, it may leak, catch on fire, or explode.
- **DO NOT** use the product if it was involved in a crash or a heavy bump.
- If the product falls into the water during use,take the product out immediately and put it in a safe and open area. Keep a safe distance from it until it is completely dry. Never use it again and dispose it properly as described in the Battery Disposal section below. If the product catches fire, it is recommended to use fire extinguishing equipment in the following order: water or water mist, sand, fire blanket, dry powder, carbon dioxide fire extinguisher.
- **DO NOT** allow pins, wires or other metal pieces to insert to the device case, outlets or controls. Metal pieces may short circuit the product.
- Avoid collision. **DO NOT** place heavy objects on the machine.
- Use and store the unit only in a clean and dry environment. Do not use and store in dusty and wet environment.
- If there is dirt on any plug or outlet surface, use a dry cloth to clean it. Otherwise, it will cause abrasion and result in energy loss or inability to charge.
- **DO NOT** put the machine in a microwave oven or in a pressurized container.

Product Recharging:

- **DO NOT** charge the unit via power supply systems that operate outside of AC100-240V.
- **DO NOT** charge the unit via solar panel that operate voltage outside of DC12-26V.
- Always use approved attachment charging cables. we take no responsibility for any damage caused by using other brand charging cable.
- When charging, please place the product on the ground with no flammable or combustible materials around. To prevent accidents, never leave the machine unattended during charging.
- **DO NOT** charge a product immediately after a long heavy load, because the product's temperature may be too high. DO NOT charge a product until it cools down to room temperature.
- Only charge, use the unit within an ambient temperature of 0 to 40 °C (32~104°F). The ideal charging temperature range is 71ºF to 82ºF(22°C to 28°C).

Product Storage and Transportation:

- Keep the product out of the reach of children. If any children accidentally swallow parts, please go to a doctor immediately.
- If a low-battery warning appears, charge the battery before store it.
- Store the product in dry environments. DO NOT place the product where it may contact with water.
- Make sure no small metal objects can fall on or around the product while in storage.
- Never transport a product with a battery power level higher than 30%.

Product Maintenance:

- Never store the product in environments below -20°C or above 45°C.
- Battery life may be reduced if not used for a long time.
- Fully charge and discharge the battery at least once every 3 months to maintain battery health.

Feature details

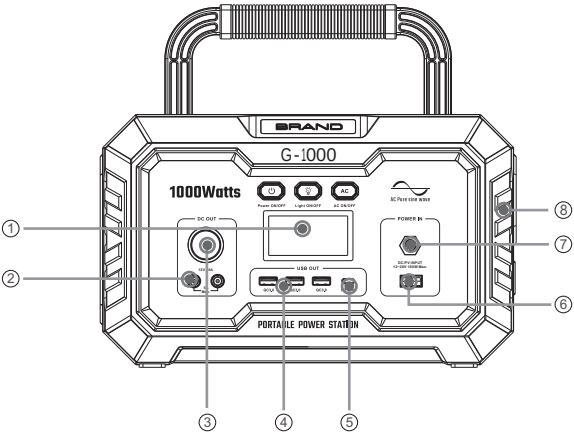

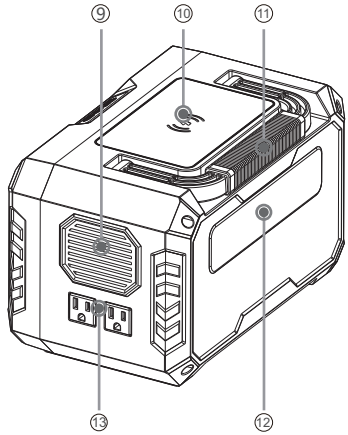

① LCD screen display
② DC 5525 output
③ Cigarette Lighter output
④ USB-A output
⑤ USB-C output
⑥ PV input
⑦ DC input
⑧ Anti-collision strip
⑨ Wireless charger
⑩ Folding handle
⑪ SOS mode & LED light
⑫ Air Intake vent with cooling fan
⑬ 1000W rated AC output

Note: No user-serviceable parts inside.
Recommended to fully charge the G1000 before use.

Button feature

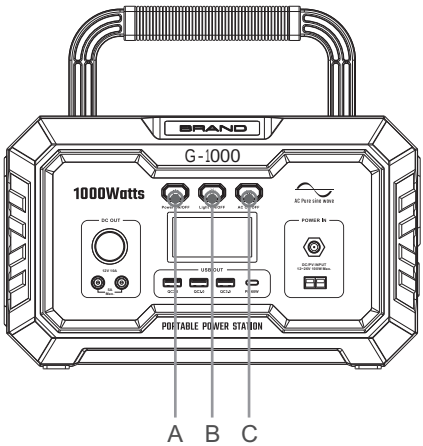

A: G-1000 power ON/OFF button
B: SOS mode & LED light button
C: AC outputs power ON/OFF button

Function buttons

Button A: G1000 power ON/OFF

Button A is the master switch. Press button A to turn on the power and also the DC output and USB output will be activated, press it again to shut down the output(s) when not in use. The USB-C cable of different devices need different endorsements of corresponding protocols, if the USB-C port doesn't work, try to use the AC adapter to charge .

Button B: SOS mode & LED light

Function is available no matter the button “POWER ON/OFF ” is activated or not.
as the following steps :
Firstly, press button B to turn on the LED light into the LED light mode .
Secondly, double click it to turn on the SOS mode.
Thirdly, press button B back to LED light mode, then press it again, the light will be turn off.

Button C: DC output power ON/OFF

Pls. make sure the button “POWER ON/OFF” is activated before pressing button C to turn on; Press button C to shut down the output(s) when not in use.

Wireless charger

Press “ POWER ON/OFF” Button to turn on the wireless charger.
Press “POWER ON/OFF” Button to shut down the output(s) when not in us.

Cooling fan

G1000 utilizes an internal cooling fan to ensure the product is operating within the appropriate temperature range. G1000,when it experiences a higher output load, will automatically turn on the fan during discharge or recharging , the fan may operate intermittently to keep internal temperature within operating range. The fan will likely start when the AC circuit is activated to ensure proper operation.

LCD features

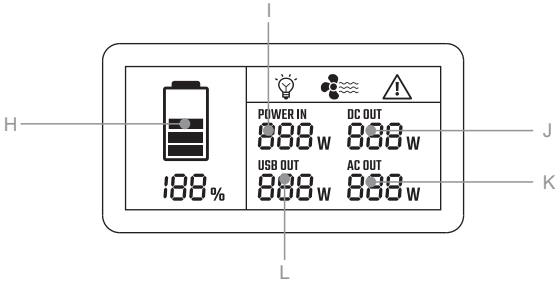

H: Battery level indicator
I: Input status
J: DC outputs status
K: AC outputs status
L: USB outputs status

Details displayed on LCD

Battery level indicator :
The battery level is provided by percentage of battery

Charge corresponding to the number of bars and percentage displayed. The segments in the battery level correspond to the current state of charge, 0-5% empty, 6-20% one segment, 21-40% two segments, 41-60% three segments, 61-80% four segments, and all five are lit when charge level is above 81%.

Provides the user live telemetry data on time to completely charge, or deplete thebattery based upon the energy entering or leaving the battery.

Highly recommend to fully charge G1000 when first use. Higher battery level indicator show, more precise the data will indicate.

Please be aware that this value can adjust multiple times as the energy draw changes from the connected devices. This is evident during initial activation of ports with a connected device.

Recommended back to charge the G1000 when battery indicate less than 20%. Note that when you first plug in a power source, whether it's a solar panel or a wall charger, the G1000 may take a minute to detect and adjust its charge circuitry before it starts drawing power from the source.

Input status : The G1000 is capable of providing input energy in watts.
DC output status : The display will provide output watts of the DC port.
AC output status : The display will provide output watts of the AC port.
USB output status : The display will provide output watts of the USB port.

Power-saving mode:
when the device enters the input or output state, it will enter the screen-off mode after more than 20 seconds, which does not affect the normal operation of the device.

When the output power of the device is less than 5W, the device will go into hibernation after more than 3 hours, and the input can be "awakened" when the input is charged or any button is pressed. When not in use, press the switch button to turn off the output.

Operating instructions

Charging G1000

Connect the provided AC Wall power adapter to Input, and allow G1000 to fully charge prior to use, approx. 5-7 hours. When charging, the LCD Screen will be illuminated, and the LCD display will provide Battery level Indicator, G1000 is fully charged when the level is 100%. It is recommended to fully charge G1000 every 3 months to maintain the health of the battery pack.

What it powers

Laptops (41.4Wh)
Around
20 Recharges

32" TV(60W)
Around
14 hours

CPAP without heated
humidifier (15W)
56 hours

Gopro (5.9Wh)
Around
143 Recharges

Floodlight(4W)
Around
212 hours

Mini Fridge(40W)
Around
21 hours

DJ Drone(89.2Wh)
Around
9.5 Recharges

Smartphone(10Wh)
Around
84 Recharges

Switch(16Wh)
Around
53 Recharges

+MORE

How to charge

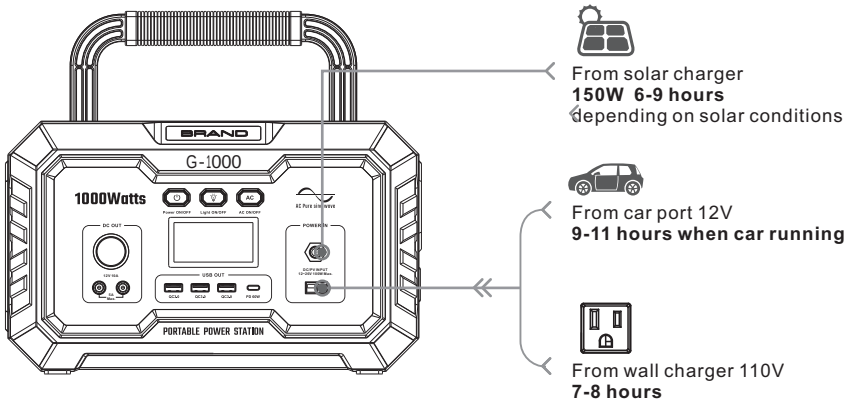

Do not connect device via ac output port while charge the G1000.recommend to disconnect the G1000 when fully charged.

Caution: Only one kind of charge modes is allowed when charging.
Do not charge the product with solar charger and adapter or car charger at the same time!

AC adapter charging

It will take 6-7 hours to charge fully by using the AC adapter we provided.

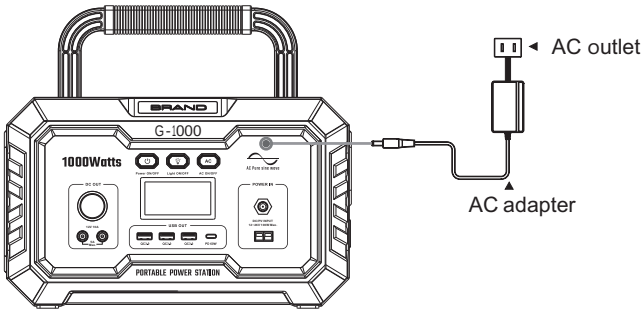

Solar panel charging

1. DO NOT charge the unit via solar panel that operate voltage outside of DC12-26V.
2. Place Solar Panels in direct sunlight as much as possible.
3. Support 60W/80W/100W/120W/150W Max Solar Panels (Not included), the charging time is determined by the solar light intensity.

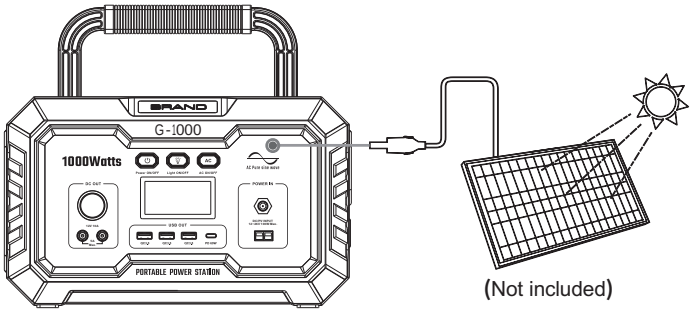

12V car charger charging

Use the car charger we provided to charge this unit. The full charge time takes 9-11 hours. When the LCD display shows the battery power of 100%, it indicates that this unit is fully charged.

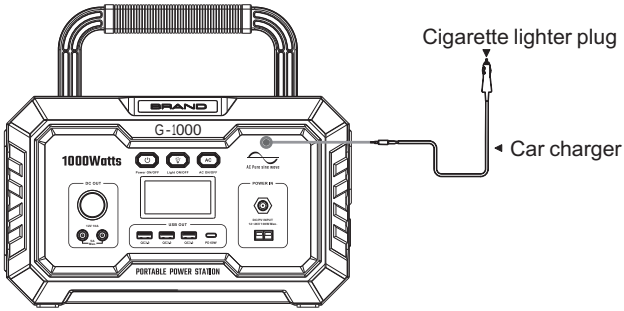

Powering / charging devices with G1000

Select the type of outlet required by pressing the output ON/OFF Button A/C. The output port will not function until the appropriate button is pressed to activate the port. When activated, the indicator on the button will illuminate green, indicating that the output(s) are active, and the LCD display will turn on and provide details on the charging output. The LCD Screen will automatically shut down when no outputs are activated.

Pass-through charging
The advanced battery management system of the G1000 allows it to charge a connected device via DC output & USB output while charge the G1000.

⚠ Do not connected device via AC output while charge the G1000.

Overload condition
If an overload condition occurs on the output port, G1000 will:
Automatically turn off AC Output(6)power.
The blue indicator light of LCD Screen(1)still illuminated.
DC output Status J still the same status as usual.

Do following:
Check the input charge cable. The port will be efficient when the input charge cable meets the specification outlined in the general specifications section.
Only charge G1000 with provided AC wall power adapter.

G1000 accessory list

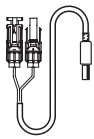

MC4-7909 connector cable

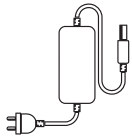

AC 100-240V wall plug power adapter

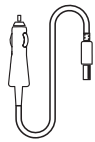

12V car charger cable

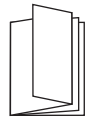

User manual

Recommend to use 100-120W Solar panel (not included).

Equipment cleaning

Please make sure that the device is disconnected from all input power and output devices. Wipe with a clean, dry, non-soft cotton cloth. Removing any foreign objects, dirt or other obstructions on the vents on both sides. When cleaning foreign objects in the side vents, do not allow debris, dirt or other Blockage enters the equipment.

Do not use corrosive cleaners or solvents.
Do not use compressed air to clean the side cooling vents, as it will cause foreign particles to enter the interior and cause a short circuit.

⚠ Note: To avoid the risk of electric shock, do not use metal objects to clean the ports.

Storage

If it will be stored for more than 1 month, please charge it to 50% capacity and keep it indoors, at normal temperature, and the maximum storage time shall not exceed 6 months. please keep away from direct sunlight (see the general specification section).

Excessive temperature will lead to reduced service life, overheating and fire. Extremely cold conditions below the specified storage range can also impair the performance and service life of the equipment. Please keep away from corrosive chemicals and gases.

After taking it out of storage, perform a visual inspection to ensure that the appearance of the equipment and all accessories are qualified. Checking the vents on the intake and exhaust sides to make sure they are free of foreign objects. Allowing the device to return to the environment before charging or other devices.

Notice

Transportation: The power station meets all legal requirements for the transportation of dangerous goods. The capacity of the lithium battery pack exceeds 100Wh. According to international standards Standard, if the power station is transported by air, it must be transported in accordance with IATA standard packaging. The instructions and labeling requirements of the International Air Transport Association and related declarations must be completed.

Not permitted on aircrafts	Avoid dropping
To preserve the battery lifespans, please use And recharge at least once every 3 months	Do not disassemble
Use original or cerified charger and cables	It's not waterproof,do not expose to liquids
Avoid extreme temperature	Please dispose of batteries and electronic Goods in accordance with local regulations

Trouble shooting

The device does not discharge:
(1) Check whether the output buttons are activated ;
(2) Check whether the total output power exceeds the rated output power;
(3) Check whether the temperature of the equipment is too high.

The device can not be charged:

1) Confirm that the wall plug power adapter's cord is inserted fully into the DC Input.
2) Confirm that the AC wall plug power adapter is the charger provided with G1000. If the input does not comply with the requirements located in the general specifications section, the low power range 0% to 10%may be displayed on the LCD.
3) If the device cannot be charged immediately after it is discharged, please wait for an hour and try again, it may enter the over-temperature protection.

Maintenance and warranty

Maintenance
Check as needed. If the G1000 energy storage power supply cannot be used regularly, please charge and discharge it every 3 months under normal temperature to keep the service life. Regularly check all ports and wall chargers for any debris, dirt, damage, and corrosion.

Do not disassemble the device privately.
Do not cover the equipment with towels, clothes or other items. Regularly observe the side vents for dust and foreign matter, and clean them according to the cleaning procedures specified in the manual.

Disposal/recycling

Do not put the device and its accessories in the trash can. Items must be properly handled in accordance with local laws and regulations.
For additional information, please see www.epa.gov.

Affirm

© Copyrighted equipment. all rights reserved. All trademarks cited here are the property of their respective owners. The information contained in this agreement is subject to change without notice. We are not responsible for technical or editorial errors or omissions contained in this agreement.
First edition: Aug. 2021.

We assure the original consumer purchaser that our products are free of defects in workmanship and materials during the applicable warranty period determined in the "Warranty Period" section below, subject to the exclusions set third below.

This warranty statement sets total and exclusive warranty obligations. We will not assume, nor authorize any person to assume for us any other liability related to the sale of our products.

Warranty period

The warranty period is 12 months, and the warranty period is calculated by the original consumer purchaser from the date of purchase. In order to determine the start date of the warranty period, a sales receipt from the first consumer purchase or other reasonable documentary proof is required.

Repair processing

We will repair or replace any products that cannot be operated due to defects in workmanship or materials within the applicable warranty period. If a valid claim is filed within the applicable period, we can choose:

(1) Replacement product.

(2) It can be exchanged with products of equal value. The replacement product bears the remaining warranty period of the original product or replaces it (90) days from the date of warranty, whichever is greater. The customer is responsible for the shipping cost of the return.

Exclusions

The warranty does not apply to 1) any product that is modified, misused, abused, damaged by accident, or used for anything other than normal consumer use as authorized in the current product literature or 2) any product purchased through an online auction house. The warranty does not apply to the battery cell unless the battery cell is fully charged by you within seven days after your purchase the product and at least every 6 months thereafter.

After-sales service

For after-sales maintenance service, please contact our customer service team.

NOTES

This device complies with part 15 of the FCC Rules. Operation is subject to the following two conditions: (1) This device may not cause harmful interference, and (2) this device must accept any interference received, including interference that may cause undesired operation.

Any changes or modifications not expressly approved by the party responsible for compliance could void the user's authority to operate the equipment.

NOTE: This equipment has been tested and found to comply with the limits for a Class B digital device, pursuant to Part 15 of the FCC Rules. These limits are designed to provide reasonable protection against harmful interference in a residential installation. This equipment generates, uses and can radiate radio frequency energy and, if not installed and used in accordance with the instructions, may cause harmful interference to radio communications. However, there is no guarantee that interference will not occur in a particular installation.

If this equipment does cause harmful interference to radio or television reception, which can be determined by turning the equipment off and on, the user is encouraged to try to correct the interference by one or more of the following measures:

-- Reorient or relocate the receiving antenna.

-- Increase the separation between the equipment and receiver.

-- Connect the equipment into an outlet on a circuit different from that to which the receiver is connected.

-- Consult the dealer or an experienced radio/TV technician for help.

FCC Radiation Exposure Statement

This equipment complies with FCC radiation exposure limits set forth for an uncontrolled environment. This equipment should be installed and operated with a minimum distance of 20 cm between the radiator and your body.

FCC ID: 2A4UPG1000MV1000