G510B-000 Spa Massage Chair

Operation Instructions

SAVE THESE INSTRUCTIONS

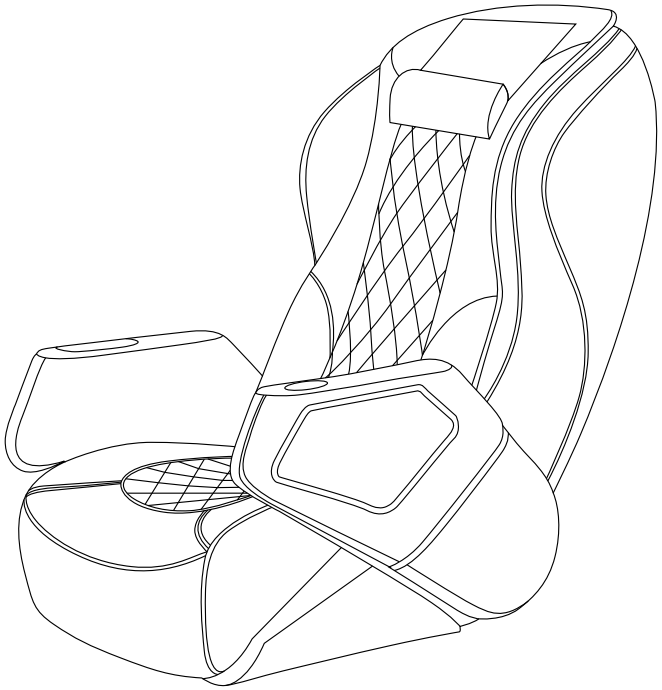

FCC STATEMENT

This device complies with part 15 of the FCC Rules. Operation is subject to the following two conditions: (1) This device may not cause harmful interference, and (2) this device must accept any interference received, including interference that may cause undesired operation.
This equipment has been tested and found to comply with the limits for a Class B digital device, pursuant to part 15 of the FCC Rules. These limits are designed to provide reasonable protection against harmful interference in a residential installation. This
Equipment generates,uses and can radiate radio frequency energy and,if not installed and used in accordance with the instructions,may cause harmful interference to radio communications.However,there is no guarantee that interference will not occur in a Particular installation.If thise quipment does cause harmful interference to radio or television reception, which can be determined by turning the equipment off and on, the user is encouraged to try to correct the interference by one or more of the following measures:
—Reorient or relocate the receiving antenna.
—Increase the separation between the equipment and receiver.
—Connect the equipment into an outlet on a circuit different from that to which the receiver is connected.
—Consult the dealer or an experienced radio/TV technician for help.
Caution: Any changes or modifications not expressly approved by the party responsible for compliance could void the user's authority to operate the equipment.
This equipment complies with FCC radiation exposure limits set forth for an uncontrolled environment.
This transmitter must not be co-located or operating in conjunction with any other antenna or transmitter.
This equipment should be installed and operated with minimum distance 20cm between the radiator&your body.
RF exposure warning:
This equipment complies with radiation exposure limits set forth for an uncontrolled environment. This equipment should be installed and operated with Minimum distance 20cm between the radiator and your body.
L’environnement du millipascal incontrôlés, leurs conditions normales d’utilisation de maintenir, aumoins 20cm avec les utilisateurs.

Thanks for purchasing this product. Please read this manual instruction carefully in order to know how to use this product correctly before operation. Please pay more attention to some important safety warning and keep this manual book properly for future use.
Note: Our Company reserves the right to revise the design and description of this product without any further notice. Please refer to the actual color of this product.

CONTENTS

Important Safety Warning	02
Name and function of components	04
Function	05
Method of usage	06
Product specification	13

IMPORTANT SAFETY WARNING

1.IMPORTANT SAFETY WARNING.

- Don’t allow children to touch moveable part of this product.
- Please use well-grounding power supply suited to this product.
- Please pull out the plug after use or before cleaning to avoid injury or Damage to the product.
- Please operate this product according to this manual instruction.
- Don’t use accessories which are not recommended.
- Don’t use this product outdoors.
- Please read this manual instruction carefully before operation.
- Any other usage that is not listed in this manual instruction is forbidden.
- 20 minutes of usage each time is recommended.
- Please don’t use it if the leather is broken or damaged.
- Please don’t use it if the cover or leather is damaged.
- Please don’t use it if the radiator hole is covered or blocked.
- Please don’t drop anything into this product.
- Please don’t fall asleep while using this product.
- Please don’t use it if drunk or feel unwell.
- Please don’t use it within one hour after having meal.
- Please don’t make the massage function too strong for avoiding Injury.

2. Environment for usage.

- Please don’t use it under high temperature and moist environment such as bathroom.
- Please don’t use it immediately while the environmental temperature changes sharply.
- Please don’t use it under heavy-dusty or caustic environment.
- Please don’t use it where there is not enough space or not good ventilation.

3. People who are not suitable to use this product.

- People who are suffering from osteoporosis are not suitable to use this product.
- People who are suffering from heart disease or carrying electronic medical equipment such as heart pacemaker are not suitable to use this product.
- People who are suffering from fever are not suitable to use this product.
- Pregnant women or women that are in menses period are not suitable to use thisproduct.
- People who got injured or skin disease are not suitable to use this product.
- Children under 14-year old or people mentally unbalanced without being Supervised are not allowed to use this machine.
- People who are told by doctor to have rest or people who feel unwell are not suitable to use this product.
- People whose bodies are wet are forbidden to use this product.

4. Safety.

- Check the voltage if it is suitable to the specification of this product.
- Don’t use wet hand to pull the plug.
- Don’t make water go inside this product to avoid electric shock or cause damage to this product.

Safety and maintenance

- Don’t damage the wires or change the circuit of this product.
- Don’t use wet cloth to clean the electric parts such as switch and plug.
- Be away from this product under power cut state to avoid injury if the power comeback suddenly.
- Stop using this product while it works abnormal, and please consult local agent immediately.
- Stop using this product if you feel unwell, and please consult health care doctor.
- This appliance is not intended for use by persons (including children) with reduced physical, sensory or mental capabilities, or lack of experience and knowledge, unless they have been given supervision or instruction concerning use of the appliance by a person responsible for their safety.
- Children should be supervised to ensure that they do not play with the Appliance.
- If the supply cord is damaged, it must be replaced by the manufacturer, its Service agent or similarly qualified persons in order to avoid a hazard.

5. Maintenance.

- This product should be maintained by certain appointed agents, users are prohibited to disassemble or maintain by themselves.
- Please don’t forget to cut the power after usage.
- Don’t use this product if the socket looses.
- If this product will be left unused for long, please curl up the wires and reserve this product in dry and dustless environment.
- Don’t reserve this product under high temperature or near fire and avoid longtime direct sunshine.
- If the detachable cord / supply cord is damaged, it must be replaced by the manufacturer, its service agent or similarly qualified persons in order to avoid a Hazard.
- Please clean this product by dry cloth. Don’t use thinner, benzene or alcohol.
- The mechanical components of this product are specially designed and made, it is not necessary to be specially maintained.
- Don’t use edged res to thrust this product.
- Don’t roll or pull this product above uneven ground, it should be lifted before moving.
- Please use it intermittently; don’t make this product work continuously for long.

6. Solution of ordinary malfunctions.

- It is nature movement voice if the motor sounds while in usage.
- If the controller can’t work normally, please check the plug and socket if they are connected strongly and make sure the switch is turned on.
- If the rated working time is over, the product will automatically activate the power-off button; If this product works continuously for long, the temperature protector will make the product automatically power-off, it should be used again after half an hour’s rest.

Name and function of components

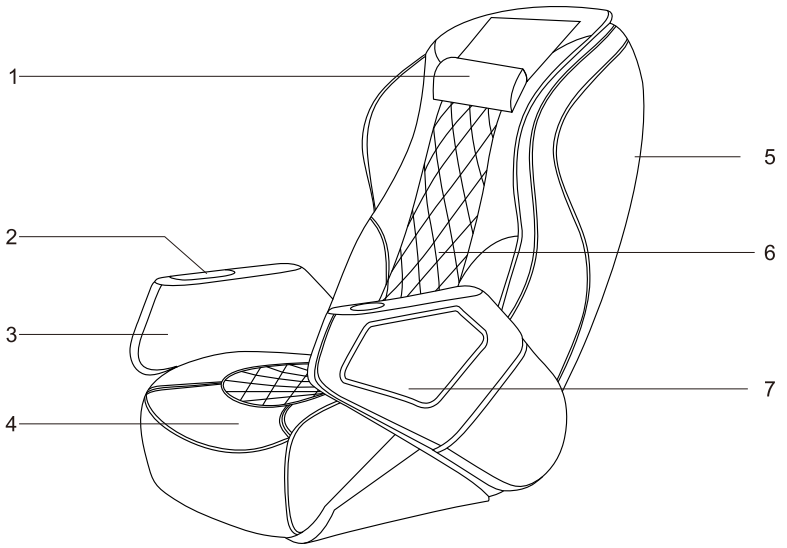

1.Detachable pillow pad
2.Controller
3.Armrest
4.Detachable seat cushion
5.The back covering
6.Back pad
7.Tray

Function

Function

- Designed with a four-wheel driven muted massage mechanism which can move up and down in the backrest.
- Programmed with five kinds of emulational massage functions of Shiatsu, kneading, flapping, knocking and synchronous kneading and flapping.
- Programmed with manual and automatic control modes for the upper body.
- Under the automatic mode, it offers three automatic changed combinations of massage function: lower, upper and full. Under the manual mode, it offers three options of overall, fixed and partial area. Under fixed state, the massage hands can be moved up and down; Each massage function has five levels of speed options; the width between the two massage hands can be adjustable in three levels of wide, middle and narrow when it is under flapping, shiatsu or knocking state.
- Seat frame forward and backward movement, backrest reclining and declining movement.
- Restoring the massage hands after turning off the machine.

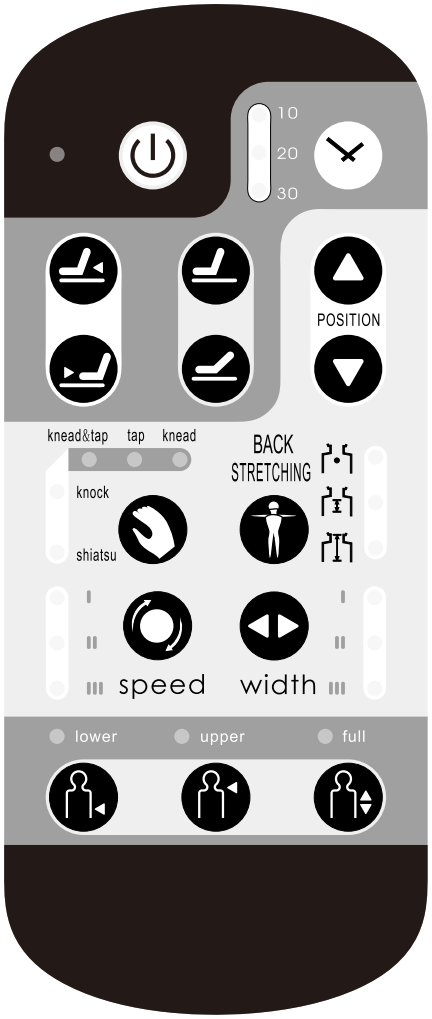

1.Controller operate

Button	Adjust massage balls
	To start or stop massage of the upper body

(1)Auto Massage

Button	Adjust massage balls
	To carrying on automatic massage around the neck shoulder mainly
	Carry on automatic massage around in carrying the waist mainly
	Adopt the various tactics to carry on automatic massage to different position of the upper part of the body, the massage position covers the whole upper part of the body.

(2)Upper body manual massage

Button	Function	Display status	Adjust massage balls
Method	Knead		Speed
	Tap		Speed, Width
	Kneading & Flapping		Speed
	Knock		Speed, Width
	Shiatsu		Speed, Width

Method of usage

Speed		For speed and massage treatments selection.five speed options available.the indicators are as follows(black stands for on) 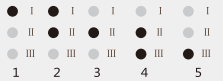
Width		Width:when massage treatment of flapping,shiatsu,or knocking has been chosen,press this button to adjust the width of the massage hands,three options,not available under auto kneadingstate.
Back Stretching		Upper body(overall) trip massage
		Small area(partial) trip massage
		Fixed position (fixed) massage
Position		When fixed massage has been chosen, press this button to move the massage device downward to suit precise massage points, not available under auto state.
		When fixed massage has been chosen, press this button to move the massage device upward to suit precise massage pointsm, not available under auto state.

(3)Other manual function

Timing		Three modes of timing: 10 mins, 20 mins and 30 mins.

(4)Adjust angle of backrest andfootrest

Seat	Forward	Press this button continually and the seat frame will move forward, loose your finger and the movement will stop.
	Backward	Press this button continually and the seat frame will move backward, loose your finger and the movement will stop.
Back	Recline	Press this button continually and the backrest frame will move upward, loose your finger and the movement will stop.
	Incline	Press this button continually and the backrest frame will move downward, loose your finger and the movement will stop.

Method of usage

2.Components install direction

- Place the bottom frame of massage chair on the spa tub.
- Make sure the holes of the bottom frame are aligned with the pre-drilled holes on the spa tub.
- Secure the massage chair onto spa tub by using provided hardware as shown in the diagram below.

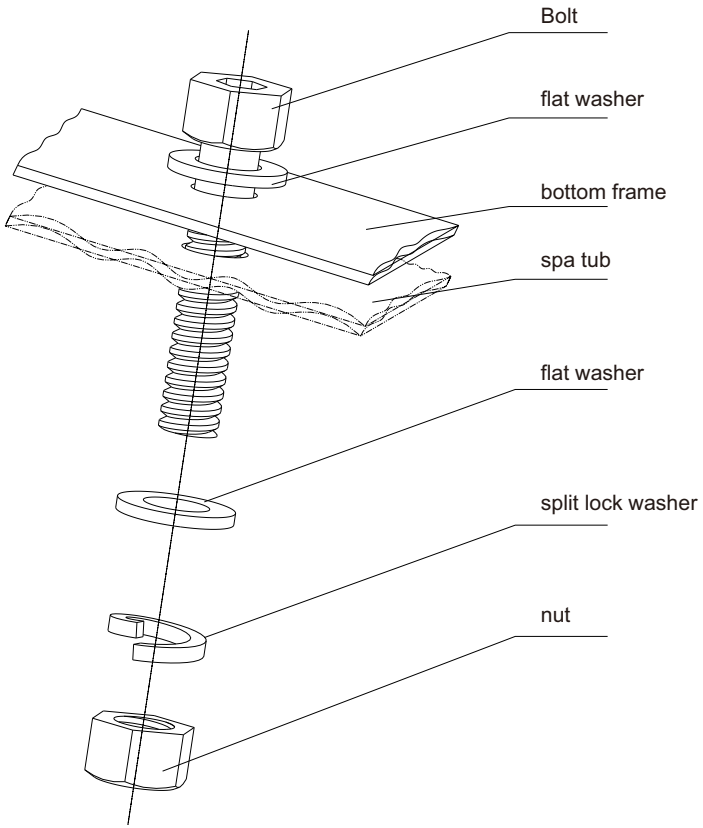

3.armrest assembling instructions

(1)The hex head bolt (M10X40) goes through the hole of armrest mounting bolt
(2)Make the right position for the armrest turning mechanism, a screw hole, the seat positioning pin of armrest mounting and hex head bolt, then tighten the bolt

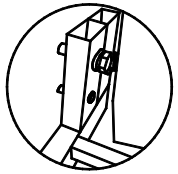

(1)

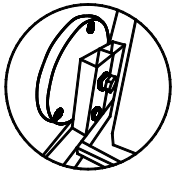

(2)

4.Instruction of backrest installation

(1).Put the back spindle in the slot of the installation base. (Note: the spindle must be in a certain angle then can be put in the slot)

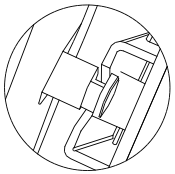

(2).Put the installation hole of the electro-motional rod in the backrest in order with the seat hole of the electro-motional rod in the backrest.and then insert the peg

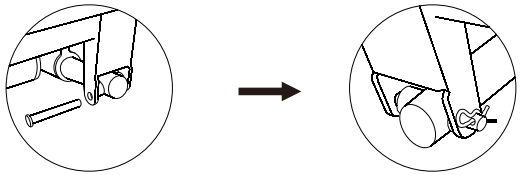

Caution：

(1). The correct method of operation: before operating the controller, please make sure that the backrest electronic cylinder is connected well with the pin that fixes the backrest.

(2). When the backrest electric cylinder is not connected with the pin that fixes the backrest, please hold the electronic cylinder in case it touches the ground when operate the controller.

(3). When debugging and installation, before operating the controller, please make sure that the backrest electric cylinder is connected well with the pin that fixes the backrest. Otherwise, after shutting down the switch, the front part of the electronic cylinder will hit the board under the seat frame to cause bad distortion of the seat frame, and even make the rail go out of the railway or damage the steel-ball railway.

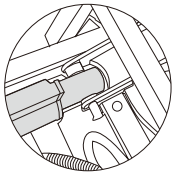

(1)

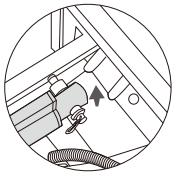

(2)

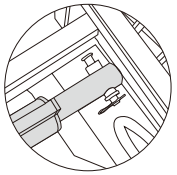

（3）

5.Operation sequence

SWITCH ON POWER
(1).insert the plug into the socket outlet.
(2).switch on the power button behind the armrest.

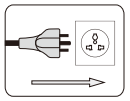

MASSAGE
(1)Select relative massage according to the operation instructions of the control.

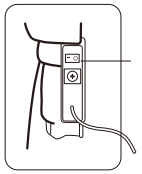

POWER

SWITCH OFF POWER
(1).stop overall massage.
(2).switch off the power button behind the armrest.
(3).pull the plug out of the socket outlet.

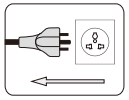

Method of usage

6.Attaching or detaching the pillow pad and back cushion

The pillow pad and back cushion (recommended) reduces the kneading intensity of your neck and shoulder, but you can decide to put it on or not according to your personal need.(1) Sticker connects the pillow pad and back cushion.

WARNING : IN CASE OF DANGER, DO NOT REMOVE THE CUSHION

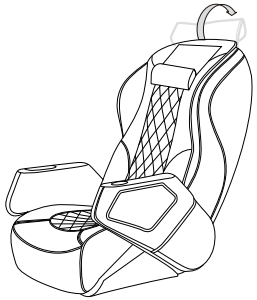

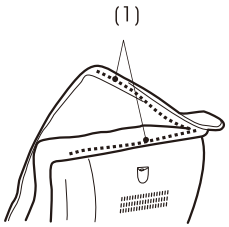

7.To Adjust The Back Simultaneously

Backrest adjustment
press and hold the button on the controller,the backrest will recline backward slowly. Release the button,then the backrest will be stopped upright
press and hold the button on the controller,the backrest will move slowly. Loose the button,then the backrest will be stopped .

WARNING: DO NOT EXERT ANY PRESSURE OTHER THAN YOUR OWN BODY ON THE BACK WHILE IT IS RISING.

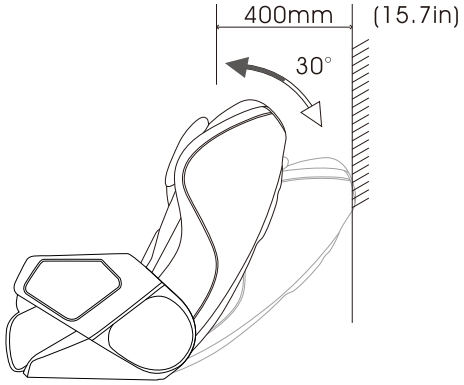

Method of usage

8.To Adjust Seat Frame Separately

The flex fuction of seat frame could fix the different height of the people to adjust the massage place of the calf airbags,the maximum distance moving forward and backward is 120mm.

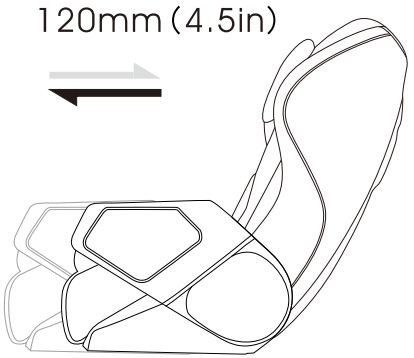

Product specification

Model: G510B-000
Name: Spa Massage Chair
Power supply: 110-120V~ 60Hz ☐
220-240V~ 50Hz/60Hz ☐
Rated power: 70W
Rated Current: 1.0A
Safety structure: Class I