SPEEDIANCE

Gym Monster Ultra
产品手册

Product Illustration

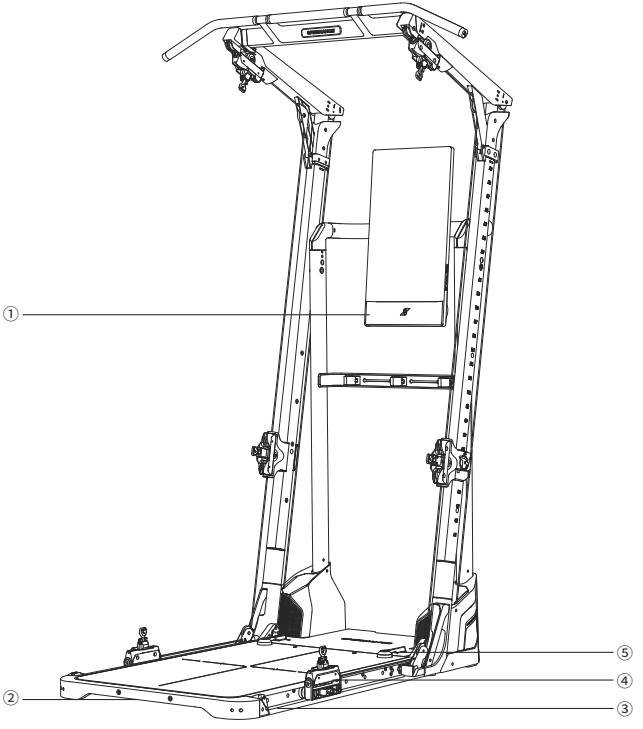

① Speaker

② Pedal Handle

③ Bottom Slide Rail

④ Bottom Pulley Bracket R

⑤ Pedal Locking Handle

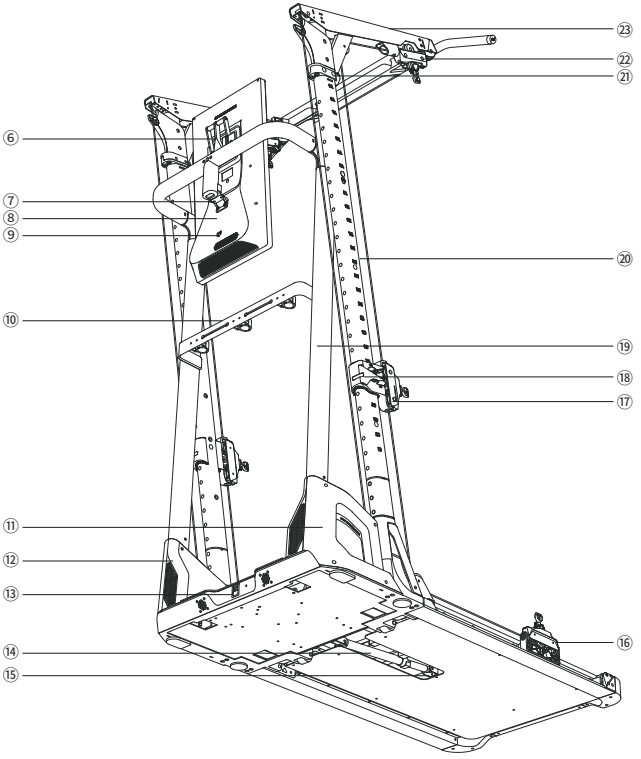

⑥ Upper Monitor Hinge	⑦ Upper Monitor Hinge	⑧ Monitor
⑨ Monitor Power Port	⑩ Accessory Storage Arm	⑪ Motor Compartment R
⑫ Motor Compartment L	⑬ Power Supply	⑭ Pedal Support Rod
⑮ Support Rod Switch	⑯ Bottom Pulley Assembly L	⑰ Middle Pulley Assembly L
⑱ Arm Slider Sleeve L	⑲ Inner Support Arm	⑳ Outer Support Arm
㉑ High-position Locking Base	㉒ Top Pulley Assembly L	㉓ High Pull-down Arm

First Use

- Before use, remove all packaging materials in accordance with the packaging descriptions (illustrations/labels). If the product is covered with a protective film, peel it off before use. (Important)
- Place the product indoors in a well-ventilated location, on a flat and solid floor.
- Keep away from heat sources and avoid direct sunlight. Do not place the product in damp or wet areas to prevent rust or reduced insulation.
- After unboxing and installation, check the appearance of the product to make sure that it is complete and intact.

1. Placement Precautions

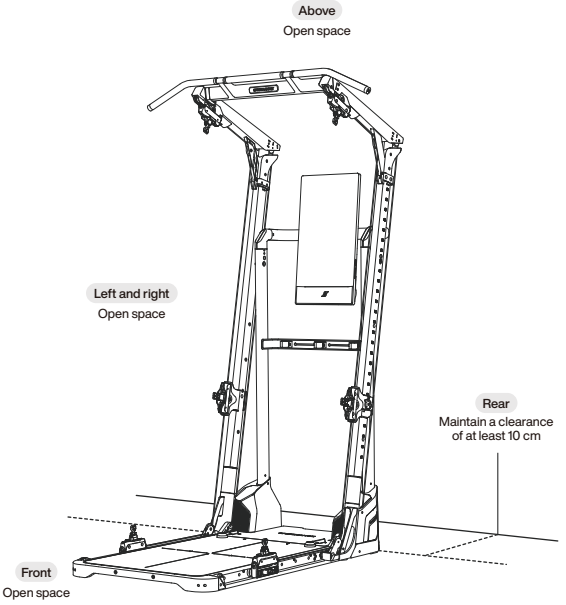

- The product must be placed on the floor. Keep an open space above the product, leave a clearance of a least 10 cm between the back of the product and the wall, and ensure both sides remain unobstructed.
- Besides the back of the product, the areas to the front, left, right, and top must also remain unobstructed to ensure uninterrupted operation and prevent injury.
- Place the product in a dry environment. Do not use it outdoors.

2. Connecting The Power And Turning On The Product

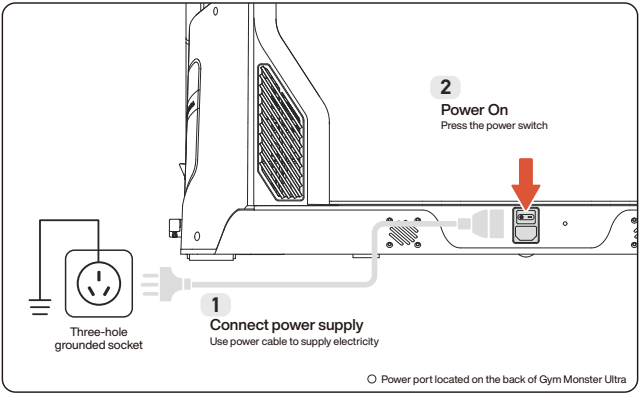

- Use a grounded three-prong outlet and ensure it is properly grounded.
- After connecting the power for the first time and turning on the product, let it sit for 5–10 minutes to check whether the exterior is damaged or if there are abnormal noises during operation. If you notice anything unusual, turn off the power immediately and contact Speediance Customer Service.
- After powering on, double check that the ambient conditions meet the usage requirements and that the platform is completely flat.
- After completing the above checks, you can proceed to use the product.

3. Platform Deploying and Retracting

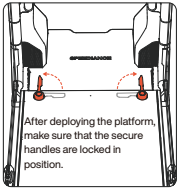

After deploying the platform, make sure that the secure handles are locked in position.

After retracting the platform, confirm that the unlock button is in the locked state to prevent the platform from dropping unexpectedly and causing injury or damage.

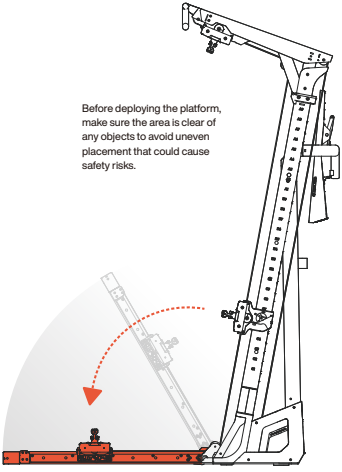

Before deploying the platform, make sure the area is clear of any objects to avoid uneven placement that could cause safety risks.

4. Moving The Middle Pulley System

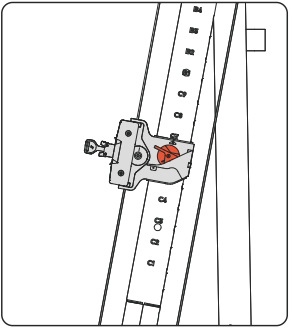

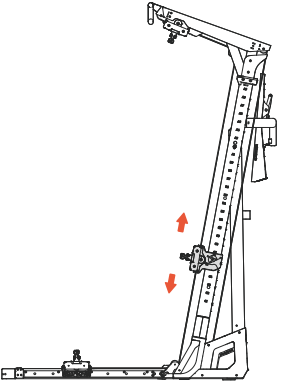

5. Moving The Bottom Pulley System

The bottom pulley system can work in a fixed way or as a follower. You can use the knob to switch between the two modes.

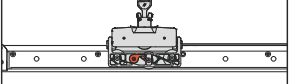

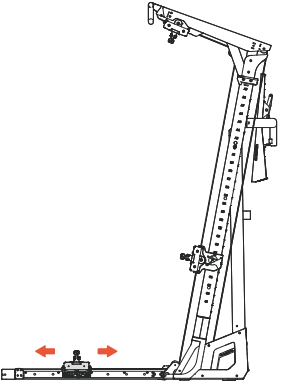

6. Replacing Accessories And Changing Grips

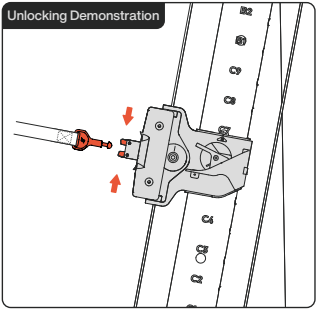

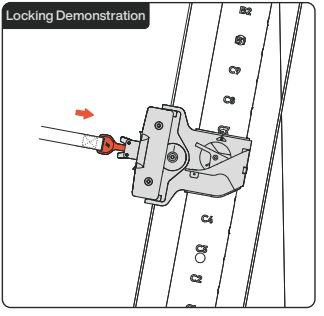

The connector works with all original accessories. If you wish to use third-party accessories, a third-party connector is required. If the connector becomes loose or faulty, discontinue use immediately and contact Speediance Customer Service.

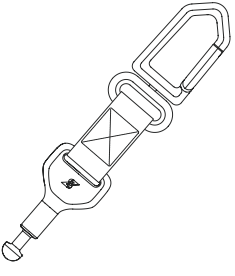

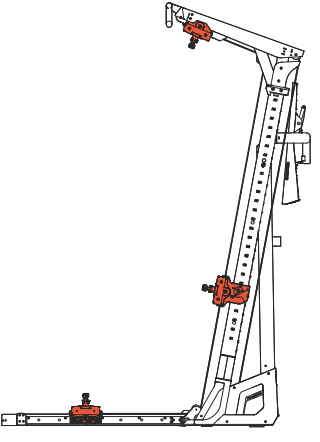

○ Schematic Diagram of Third-Party Connector Usage

More Information

For more information, visit https://www.speediance.com
Scan the QR code to access the Quick Start Guide for the product.

Main Unit Parameters

Name	Gym Monster Ultra
Dimensions(extended)	L1660 X W1340 X H2276mm(with pull-up bar)
Dimensions(folded)	L876 X W1340 X H2276mm(with pull-up bar)
Net Weight	125kg
One-Sided Resistance	3.5~60kg
Input Voltage	100-240V~，50/60Hz
Touchscreen	Full-Lamination, Capacitive, Multi-Touch Screen
Touchscreen Size	23.8Inches

Model NO.	GMUA1120A1
Touchscreen Resolution	2560 X 1440
Ambient Light	256-Color RGB
Amplifier	2.1-Channel; 25W
Voice	Dual Microphone; Voiceprint Recognition
Wi-Fi	Wi-Fi 6
Bluetooth	Bluetooth 5.3
Port 1	USB-C1: 20W
Port 2	USB-C2: Versatile USB-C
Working Temperature	-10~40℃
Humidity Range	20~80%RH

Data protection: To find out how we protect your personal information, please visit https://www.speediance.com to read our Privacy Policy, or view the Privacy Statement and Terms of Service in the Speediance app.
Open source software: Visit https://www.speediance.com and search for the product name to view detailed information on open-source software.
User Agreement: Before using this product, please read the User Agreement carefully. By using this product, you agree to be bound by the terms of the User Agreement. If you do not agree to the terms of the User Agreement, do not use this product or any associated software. You may return the product in its original condition to receive a refund.
Legal notice: Copyright © Shenzhen Speediance Living Technology Co., Ltd., All rights reserved.
The content and images in the product packaging are provided for reference only and may vary slightly from the actual product, including but not limited to appearance, color, dimensions and supported functions. Product functions may also be updated through software upgrades.

Cleaning And Maintenance

Note: Unplug the power cord before cleaning the product.
1. Regularly clean the dust from the back of the product and the floor to improve heat dissipation and maintain energy efficiency.
2. When cleaning the product, use a soft cloth or sponge dipped in clean water or a non-corrosive neutral detergent. Wipe with clean water afterward, then dry with a dry cloth. Allow the product to dry completely before reconnecting the power.
3. When cleaning, do not allow water to enter the gaps in the product, as this may cause a short circuit or damage the components.
4. If the product will not be used for a long time, unplug the power cord to prevent it from aging and causing an electric shock or fire.

Warranty Certificate

Purchase Information

Name:
Contact number:
Mailing address and ZIP code:
Purchase date:
Invoice number:
Retailer:
Retailer's address and ZIP code:
Retailer's phone number:
Model number:
Place of manufacture:
Serial number:

After-Sales Service

1. Warranty Coverage

- The limited warranty provided by Speediance is restricted exclusively to the repair or replacement of products with material or production defects.
- This warranty does not cover any indirect losses, including but not limited to loss of data, property damage not solely and directly caused by a product defect, personal injury not solely and directly caused by a product defect, loss of work, or loss of business opportunities.
- Speediance warrants that the products you purchased are free from defects. During the warranty period, if a malfunction occurs during the normal use, operation and maintenance of the product in accordance with the product manual, Speediance will provide a free warranty service. If the warranty has expired or Speediance determines that the product was damaged due to misuse or human error, you may choose to have the product repaired at your own expense. All warranty and repair services will be provided in accordance with Speediance's after-sales warranty policy, quality standards and production processes.
- Speediance's limited warranty applies only to Speediance products purchased through official Speediance channels or authorized dealers. Second-hand Speediance products or products purchased through other third-party channels are not covered by Speediance's limited warranty.
- The after-sales warranty provided by Speediance is limited in scope and does not constitute an assumption of unlimited liability. You are advised to read this warranty policy carefully in order to understand the warranty period, conditions, applicable circumstances, cost burden, risks and other relevant terms of Speediance's repair services.

2. Warranty Period

- The warranty validity period comes into effect at 0:00 on the day of delivery and terminates at 24:00 on the day before the product's expiration date. If the user/logistics provider is unable to provide a specific date of receipt/delivery, the warranty validity period will come into effect on the date that the invoice was issued, or on the date the order was placed. If the user is unable to produce a valid purchase invoice or other proof of purchase, the warranty validity period will come into effect from the day the product leaves the factory, and will be in effect for 30 days.
- The standard warranty period for the main unit is 24 months, and the standard warranty period for accessories is 12 months (pre-installed cables and other items are considered accessories).
- Any parts replaced or repaired during the warranty period shall become the property of Speediance (the user is responsible for returning these parts to Speediance). Any parts replaced or repaired outside the warranty period shall remain the property of the user.

Conditions for free warranty services

1. The product is a Speediance product purchased from an official Speediance channel or authorized dealer.
2. During the specified warranty period, the product is used under normal conditions and is affected by a performance-related fault not attributable to misuse.
3. The product was purchased primarily for personal or household use (if the product is intended for commercial use, rental or other non-personal/household purposes, a separate procurement agreement must be concluded with Speediance stating the applicable warranty terms). This clause does not affect consumer rights under applicable law.
4. The user must provide valid proof of purchase (such as the order number, invoice or receipt) together with the product serial number.

3. Warranty Exclusions:

The Speediance warranty does not apply to any non-Speediance branded hardware products or any software (even if packaged, sold or distributed together with Speediance hardware). Speediance shall not be liable for damage resulting from failure to follow the operating instructions for Speediance products, nor for any loss or corruption of data caused by the product.

The warranty does not cover the following:

1. Damage caused by factors unrelated to manufacturing, including but not limited to incorrect installation, usage or disassembly, or by failure to follow official instructions or manuals.
2. Direct or indirect damage caused by installation or removal of the product, such as damage to personal property, walls or flooring.
3. Damage caused by regular use or factors unrelated to manufacturing or transportation, such as wear, metal rusting, and decline in functionality or appearance (including but not limited to scratches, dents and discoloration of the plastic).
4. Damage caused by forceful training despite the presence of worn or damaged parts.
5. Damage caused by unauthorized modifications, disassembly, servicing or non-Speediance technical support (such as unsuitable third-party operators, product setup or installation).
6. Damage caused by unauthorized modifications to the electrical circuit, improper use of the battery charger or external power supplies, and by operating the product on an insufficiently powered or defective battery.
7. Damage caused by reliability or compatibility issues when using unauthorized third-party parts.

8. Damage caused intentionally or by unauthorized modifications (including tampering with product operating data).
9. Damage caused by exposure to extreme conditions (such as high temperatures or corrosive environments).
10. Damage caused by electromagnetic interference or interference from other wireless devices.
11. Damage caused by force majeure events, such as fires, flooding, earthquakes or electrical accidents.
12. Damage caused by using non-commercial grade products for commercial purposes, such as for gyms, hotels, multi-residence facilities or personal training studios.
13. Malfunctions of or damage caused by any third-party products, including those integrated into Speediance products at your request.
14. Any software programs, whether supplied with the product or installed after purchase.
15. Parts and products with labels or logos that have been altered or removed.
16. Damage caused by improper storage or transportation of products or by improper use (such as being exposed to fire, immersed in water or struck by lightning).
17. Damage caused by contact with liquids (such as sweat, beverages or rain).
18. Damage or performance issues caused by the use of unofficial, unauthorized or incompatible accessories.
19. Secondary damage or complications resulting from unauthorized repair attempts by the user (even if well-intentioned).
20. Cosmetic aging (such as rusting of metal parts or discoloration of plastic parts) or functional issues caused by extended periods of disuse.
21. Repair requests arising due to a misunderstanding of product functions/performance or unmet expectations (such as workout results failing to meet expectations and other subjective circumstances), unless there is clear evidence of a hardware defect.
22. Accelerated wear or premature component failure resulting from intensive use by multiple users (such as frequent use by more than three users).
23. Structural damage, component deformation or performance failures caused by the user weight or usage intensity exceeding the maximum load stated in the product specifications.
24. Damage caused by improper use (such as suspending heavy objects, use by pets or use of the product as a support tool) or for any purpose other than its intended design.
25. Startup failures or functional issues caused by unsuccessful software/firmware upgrades that are not attributable to Speediance's servers.
26. Mechanical, structural, electronic or cosmetic damage caused by improper storage (such as failure to lock folding mechanisms, placing the product upside down or stacking heavy objects on the product).
27. Interruptions in access, changes to content, functional changes or termination of mobile apps or online services provided for use with the product (such as course subscriptions or live-streaming services).
28. Associated damage caused by failure to promptly replace components that have reached the end of their service life or are expressly designated as consumable parts (such as cables).
29. Warranty requests from subsequent owners after transfer of product ownership (i.e., second-hand transactions), even if the product is still under warranty.
30. Any personal injury, property damage or other consequences caused by failure to comply with product safety warnings and operating instructions.

4. How To Make A Warranty Claim

- In the event of a performance-related issue that is covered by the terms of this warranty policy, please contact Speediance Customer Service at after-sales@speediance.com.
- To obtain prompt assistance, we recommend that you contact us as soon as you notice an issue.
- You must provide valid proof of purchase (such as the order number, invoice or receipt) together with the product serial number to make a warranty claim. Services not covered by Speediance's limited warranty policy may be subject to additional charges.

5. Amendments To And Applicability Of Warranty Terms

Speediance reserves the right to amend this Warranty Policy for the following reasons:
1. Legal and regulatory requirements: To comply with newly enacted or amended laws, regulations, rules and administrative directives.
2. Product technical iterations: Where upgrades in product technology or changes in service models require changes to warranty procedures.
3. Force majeure: Where performance of the original terms is rendered impossible due to natural disasters, policy changes or other force majeure events.
4. Effective date of these amendments: Amendments that reduce your responsibilities, enhance your rights or expand the scope of the warranty shall take effect immediately.
Amendments that narrow the scope of the warranty or impose additional obligations on you will be announced on the official website or communicated by email, and shall apply to products purchased on or after the date of announcement. Products purchased before the date of announcement shall continue to be covered by the warranty terms in effect at the time of purchase.
5. Following these amendments, Speediance may make further changes to the warranty terms and policy for the reasons stated above and publish such changes through the app, official website, product interface or other channels. After the changes are published, you will be granted a 60-day period to lodge an objection. If you have

any objections, you may contact Speediance Customer Service (after-sales@speediance.com) within the 60-day period. If you do not lodge any objections within this period, you shall be deemed to have accepted the revised warranty terms and policy.
Regardless of whether the product is under warranty, if you request a home repair service (including but not limited to on-site inspection, repair or installation of a new product), any resulting service fees (such as transportation and labor costs) shall be borne by you. For more information on service fees, please contact Speediance Customer Service.
Local laws and regulations of the place of purchase shall prevail if they have stricter requirements on after-sales services, warranty periods or consumer rights or compulsory clauses that are more favorable to the consumer.
Email: after-sales@speediance.com
Address: 19/F, Gemdale Viseen Tower A, No. 16 Gaoxin South 10th Road, Gaoxin Community, Yuehai Neighborhood, Nanshan District, Shenzhen, China

---

Manufacturer	Manufacturer: Shenzhen Speediance Living Technology Co., Ltd.
Manufacturer's address	Suite 1901, 1902, 1903, 1905, 1906, 1907, Gemdale Viseen Tower A, No. 16 Gaoxin South 10th Road, Gaoxin Community, Yuehai Neighborhood, Nanshan District, Shenzhen, China
Implemented standard	GB4943.1-2022
FCC ID	2A4WP-GMUA1120A1
IC ID	28295-GMUA1120A1

Speediance app

Product Manual

MADE IN CHINA

FCC Warnning:

This equipment has been tested and found to comply with the limits for a Class B digital device, pursuant to part 15 of the FCC Rules. These limits are designed to provide reasonable protection against harmful interference in a residential installation. This equipment generates, uses and can radiate radio frequency energy and, if not installed and used in accordance with the instructions, may cause harmful interference to radio communications. However, there is no guarantee that interference will not occur in a particular installation. If this equipment does cause harmful interference to radio or television reception, which can be determined by turning the equipment off and on, the user is encouraged to try to correct the interference by one or more of the following measures:

• Reorient or relocate the receiving antenna.
• Increase the separation between the equipment and receiver.
• Connect the equipment into an outlet on a circuit different from that to which the receiver is connected.
• Consult the dealer or an experienced radio/TV technician for help.

Caution: Any changes or modifications to this device not explicitly approved by manufacturer could void your authority to operate this equipment.

This device complies with part 15 of the FCC Rules. Operation is subject to the following two conditions:

(1)This device may not cause harmful interference, and (2) this device must accept any interference received, including interference that may cause undesired operation.

This equipment complies with FCC radiation exposure limits set forth for an uncontrolled environment. This equipment should be installed and operated with minimum distance 20cm between the radiator and your body.

ISED Statement:

- English: This device contains licence-exempt transmitter(s)/receiver(s) that comply with Innovation,Science and Economic Development Canada’s licence-exempt RSS(s). Operation is subject to the following two conditions:

(1) This device may not cause interference.
(2) This device must accept any interference, including interference that may cause undesired operation of the device.

- French:Cet appareil contient des émetteurs/récepteurs exempts de licence qui sont conformes aux CNR exempts de licence d’Innovation, Sciences et Développement économique Canada. Le fonctionnement est soumis aux deux conditions suivantes :

(1) Cet appareil ne doit pas causer d’interférences.
(2) Cet appareil doit accepter toute interférence, y compris les interférences susceptibles de provoquer un fonctionnement indésirable de l’appareil.

This equipment complies with Canada radiation exposure limits set forth for an uncontrolled environment.

This equipment should be installed and operated with minimum distance 20cm between the radiator & your body.

Cet équipement est conforme Canada limites d'exposition aux radiations dans un environnement non contrôlé.

Cet équipement doit être installé et utilisé avec une distance minimale de 20 cm entre le radiateur et votre corps.

The device for operation in the band 5150–5250 MHz is only for indoor use to reduce the potential for harmful interference to co-channel mobile satellite systems.

L'appareil destiné à fonctionner dans la bande 5150-5250 MHz est uniquement destiné à une utilisation en intérieur afin de réduire le potentiel d'interférences nuisibles aux systèmes mobiles par satellite cocanaux.

OWN IT.