整体尺寸：262.5mmX75mm　　单页尺寸：52.5mmX75mm

Owner's Manual

C87B

Safety Instruction

Please Read this manual carefully before using it.

- Keep following this instructions.
- Don' t try to disassemble it by yourself.
- Don' t exposed directly to sunlight, open flames which will cause a potential damage.
- Keep your attention on road and do not operate this product while driving.

Introduction

Features :

- Input 12V-24V
- FM transmitter : 88.0-108.0MHz frequency range
- Bluetooth hands-free call
- Streaming music from smart phone to car audio system via FM transmitting
- Type-C : PD 18W
- Support USB flash drive playing
- Support TF card playing
- Car battery monitor

Here it is:

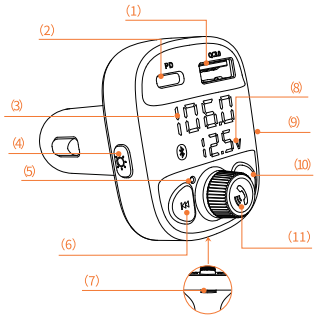

1.QC3.0 charging interface
2.Type-C charging interface
3.LED display
4.Ambient light awitch
5.Microphone
6.Previous piece
7.Micro SD Port
8.Battery voltage display
9.USB interface
10.Next track
11.Multi-function key

LED Indicator	Status
12.5	Car battery voltage
bt	C87B Bluetooth ready to pair
106.0	FM transmitting frequency

Get it ready for playing

①Plug C87B into your car cigarette lighter socket.

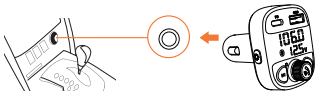

②LED display light on, it will shows: 13.5 - bt - 106.0
③Bluetooth connect:
After LED displays " bt", means it is ready to pair with a voice prompt : " Waiting for connection".

On your smart pone, enable Bluetooth function, search available devices, select "C87B"and pair with it. Once connected, there is a voice prompt : " Bluetooth connection success".

④Turn on FM on your car radio , and find a vacant (unoccupied) channel. Then go to adjust the frequency on C87B to match the frequency on your car radio.

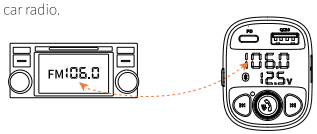

⑤Adjust the FM transmitter frequency Press and hold multifunction knob button until the frequency display flickering, rotate the knob button to adjust the fm transmitting frequency to be as same as frequency on your car radio.

Play music

Play music on your phone:

After step 1-5, you can start playing on your smart phone, the music will streaming by Bluetooth A2DP function , from your phone via FM transmitting to car radio, and come out from car stereo system.

Play / Pause	Press
Previous / Next track	Press ⏮ / ⏭
Volume U30	rotate

Play music from USB flash drive:

Plug USB flash drive into the right USB port with " ♫ " icon. C87B will start to recognize and play automatically.

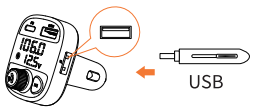

Play/pause	Press
Previous / Next track	Press ⏮ / ⏭
USb	USB flash drive ready to play (when you plug in a USB flash drive)
tF	TF card ready to play (when you insert a TF card)
001	Song 001 playing
Volume(U00-U30)	rotate

Play music from TF card:

Insert TF card to TF card slot, C87B will start to recognize it with display " tF " and start playing automatically. All operations are same as USB flash drive playing mode.

How to switch playing among bt - USb - tF
Press " ⏭ " and hold until LED displays bt or tF (or USb), then playing will transfer to mode which it shows.

Atmosphere lamp key (☼)
Short press this key to switch the seven monochromatic color light and off the light, long press this key to automatically change the light

Hands-Free Call

After you get ready for playing ,you can also start to use hands-free function.

Answer a incoming call	Press
Reject a incoming call	Press and hold
Hang up a calling	Press
Recall last incoming/outgoing call	Quickly press twice

Under music playing status(bt/ tF / USb flash drive), if there is a call coming in,it will switch to call mode automatically,after hung up,it will switch back to playing mode automatically.

Charge your device

- QC3.0 5V/2.4A 9V/2A 12V/1.5A charging port
- Type-C PD+ Type-C PD 18W Support PD3.0/ QC3.0 / QC2.0/FCP/AFC/Apple2.4A/BC1.2

Specification

DC input : 12V-24V
Total Output : 36W
Bluetooth V5.0
Bluetooth connect distance : 10m
Audio format : MP3 , WMA, FLAC , WAV
FM transmitting distance : ≥2M
USB capacity support : ≤ 64GB
Working temperature range : -20 °C to 40°C
Storage temperature range : -40 °C to 75 °C

This device complies with Part 15 of the FCC Rules. Operation is subject to the following two conditions: (1) this device may not cause harmful interference, and (2) this device must accept any interference received, including interference that may cause undesired operation

NOTE: This equipment has been tested and found to comply with the limits for a Class B digital device, pursuant to Part 15 of the FCC Rules. These limits are designed to provide reasonable protection against harmful interference in a residential installation. This equipment generates, uses and can radiate radio frequency energy and, if not installed and used in accordance with the instructions, may cause harmful interference to radio communications. However, there is no guarantee that interference will not occur in a particular installation.
If this equipment does cause harmful interference to radio or television reception, which can be determined by turning the equipment off and on, the user is encouraged to try to correct the interference by one or more of the following measures:
-- Reorient or relocate the receiving antenna.
-- Increase the separation between the equipment and receiver.
-- Connect the equipment into an outlet on a circuit different from that to which the receiver is connected.
-- Consult the dealer or an experienced radio/TV technician for help.

Warning: changes or modifications not expressly approved by the party responsible for compliance could void the user's authority to operate the equipment