HYDROPONICS GROWING SYSTEM SETUP GUIDE

IGS-67

Components of the Smart Garden

1x	8x Planting brackets	8x Germination Dome	8x 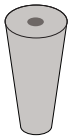 Growth Sponge
1x 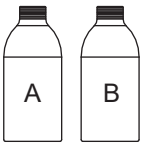 Nutrient bottle A/B	8x 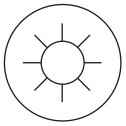 Pod label	1x Plug adapter	1x Manual

Components of the Smart Garden

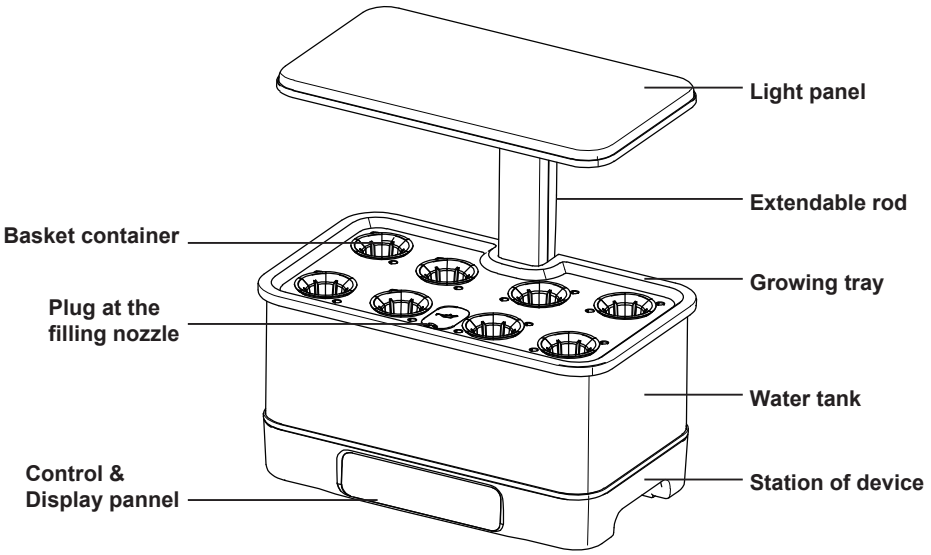

NOTE: **Choose plant seeds that can grow under the light panel to its maximum height (12.6in).**

EASY SET UP

POWER	When inserting the plug into the power source, the machine will make a long"Di" sound and this icon of the touch panel will Flickering like breath, indicating that the power is on. and the machine is in standby mode;Touch the button once, the machine will automatically turn on with the machine in "VEG" planting mode. NOTE: If there is not enough water in the water tank when the machine is turned on, you will hear a Long Beep sound for 30 seconds.(after 30 seconds will turn off automatic) This is an alarm sound to indicate that there is not enough water in the water tank, so need to fill up the water.

PLANT	**Touch once**	When you press the button, the machine will enter the"Flower&Fruit" growing mode (red and white LED) automati-cally and the indicator of this button will display during the working period.Including auto on and off timer works on a 24-hour cycle. The light is on for 16 hours, enters sleeping mode for 8 hours, and the button-on the indicator of this button will flash slowly. After that, the machine will automatically light on at the same time the next day.When you press the Plant button again, the machine will enterthe "Veg&Herbs" growing mode (blue LED) automatically and the indicator of this button will display during the working period.Including auto on and off timer works on a 24-hour cycle. The light is on for 16 hours, enters sleeping mode for 8 hours,and the indicator of this button will flash slowly. After that, theh ydroponic growing system will automatically light on at the same time the next day.
	Long touch 3 seconds	Hold down this button 3 seconds ,the system will come to brightness adjustable mode, the (000) will filickering and indicates current brightness value(the default value is 080 level of the power on), press up or down key to adjust the brightenss . If the brightness reaches the maximum(100) or minimum(010) value, then press the button, the system will no any adjust.

PUMP	**Touch once**	After pressing the Power button, the indicator of Pump button will be on at the same time and the pump will automatically enter the working cycle of 30-minutes on and 30-minutes off. If you press the Pump button once, then the button indicator will flash and immediately enter12-hours sleep mode. After the sleep mode is completed, the pump will enter the working cycle of 30-minutes on and 30-minutes off again.

SETUP	**Touch once**	In the standby mode,The plant days will automatically increase everyday.Press once , the number of"PLANT DAYS" on the screen will start to flash, and the number of days can be manually adjusted. This number will flash for 10 seconds, then automatically stop flashing and confirm the current number, or within 10 seconds of flashing, press the button again,the number of "PLANT DAYS" on the screen will stop flashing and confirm the current number.
	Touch once more	In the setup mode, if touch once more button, the system will shift to temperature's unit mode, you can use buttom for shift "Fahrenheit" or "Celsius" display.
	Long touch 3 seconds	In the standby mode, Long press for 3 seconds , the“Indicator for internet” marker ———————— will start to flashfor 3 mins, in this time, you can scan this device on "Smart Life" app by your phone, if found and connected to APPthis icon will fast flash 3 times and the icon will be lighting immediately; if no found or connected to APP, the icon will disappear after 3 mins.

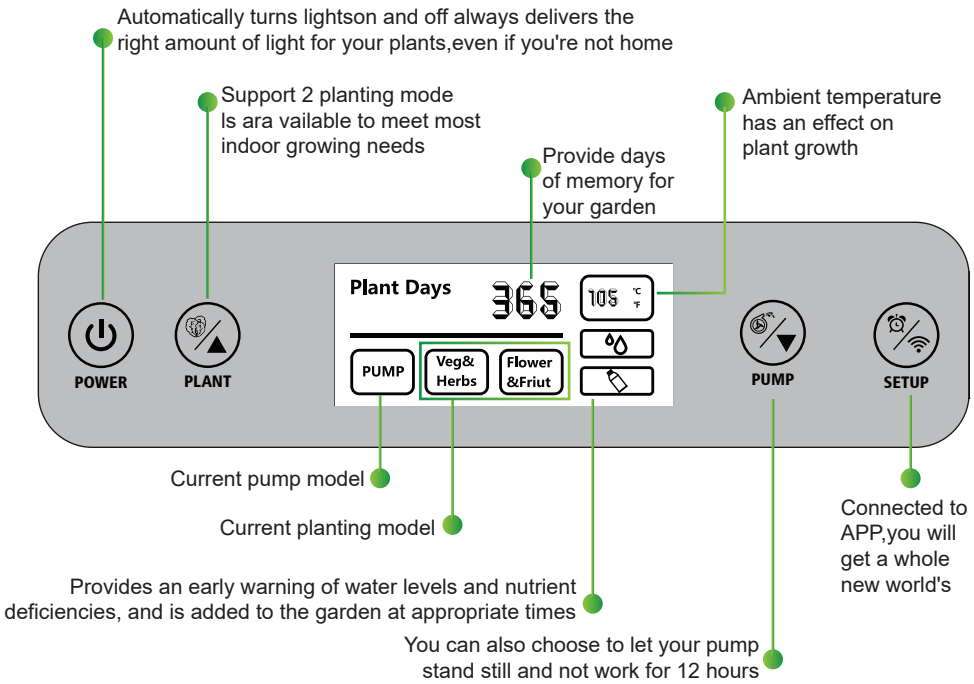

Components of the Smart Garden

1. Take your machine out of the box. Remove the packing remove the growing tray, take all the accessories out of the water tank.

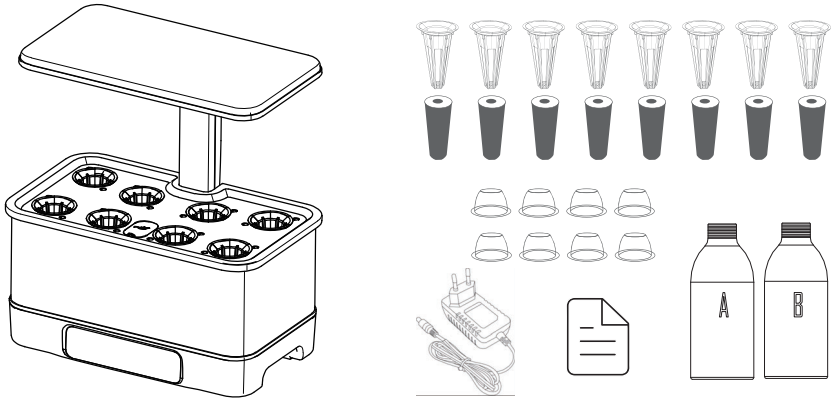

2. Install extendable rod to water tank and Light panel, place the growing tray on the top of water tank.

Step 1:

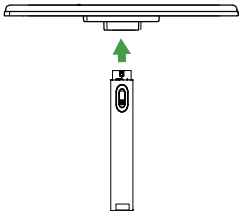

Step 2:

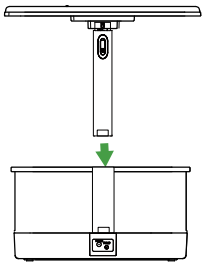

Step 3:

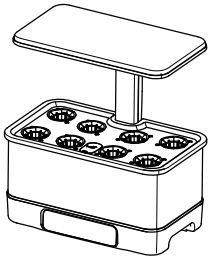

3. Install extendable rod to water tank and Light panel, place the growing tray on the top of water tank.

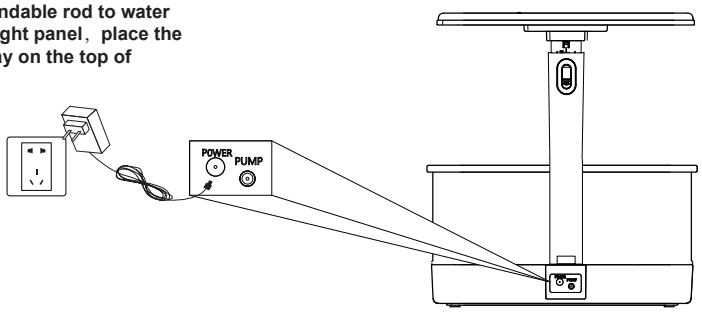

4. Prepare your plant food

4.1 Fill the bottle of plant food A and plant food B with water. Keep shaking both bottles until the plant food have completely dissolved. Each 5ml of mixed plant food solution A and B should be combined
with 1 Litre water.

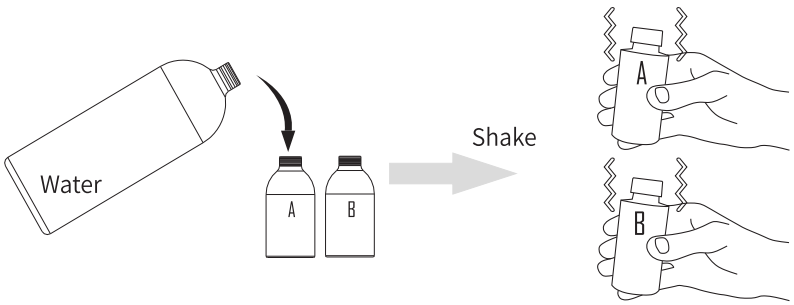

4.2 Use the cap of the plant food as a measure, pour a cap of plant food A into a jug and dissolve with 5ml of water. Then add the mixed plant food solution into 1 Litre of water and stir until completely dissolved. Repeat the step with plant food B.

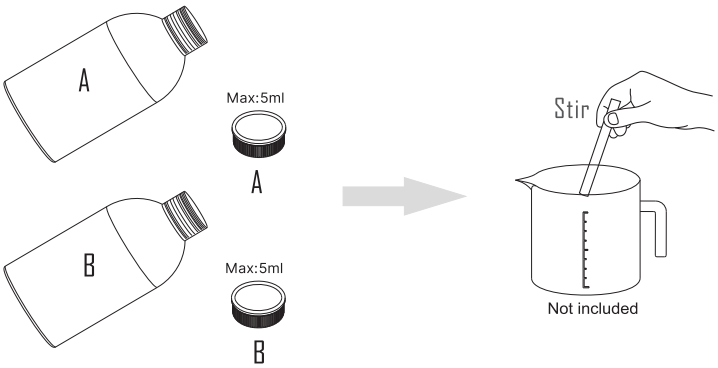

Water	Nutrient
1L	5ml A + 5ml B
2L	10ml A + 10ml B
3L	15ml A + 15ml B
4L	20ml A + 20ml B
5L	25ml A + 25ml B

NOTE: The unopened plant food can be stored for 2 years in a cool dry place. If you used plant method 1 to make plant solution, the dissolved plant food can be preserved for 5 months.

5. Pour the well-mixed solution into water tank
(It is recommended that the initial wateraddition should not exceed 2.5 liters).

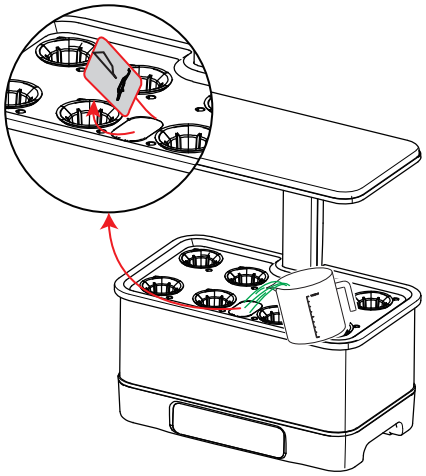

6. Push the button for adjust the height of the lamp to up or down.

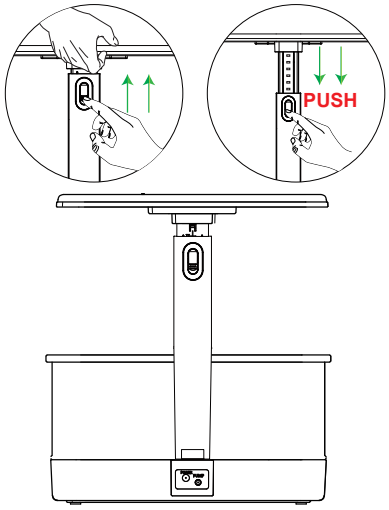

7. Put the sponges into the white baskets and then insert them into the pods of the growing tray, 2-3 seeds in each sponge are the best.

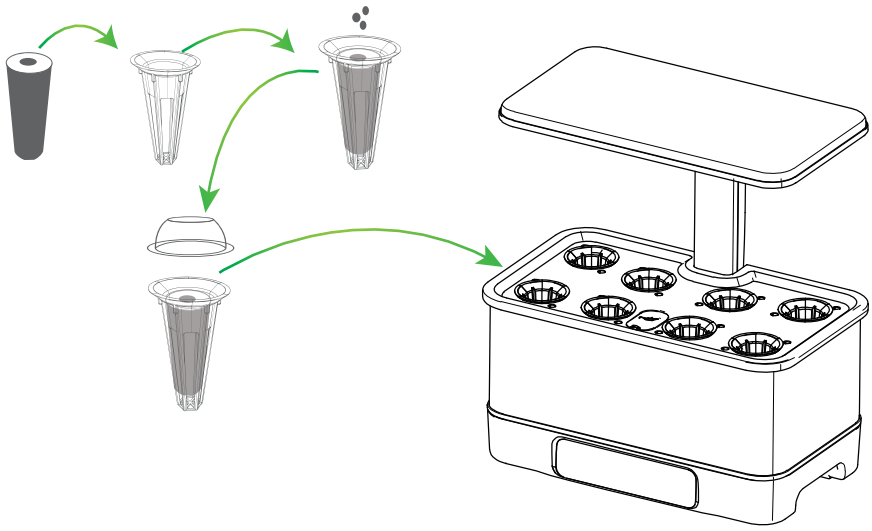

How To Clear a Water Pump

How to clear a water pump

1.Gently unhook the small latch of the water pump and open thecover above the pump.

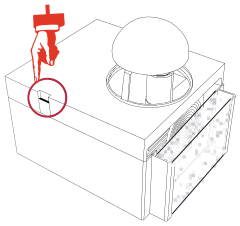

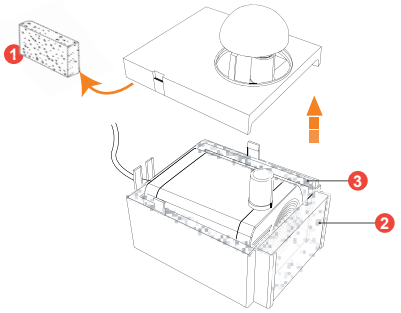

2.Take out the sponge and the water pump body, and rinsethem thoroughly with clean water.

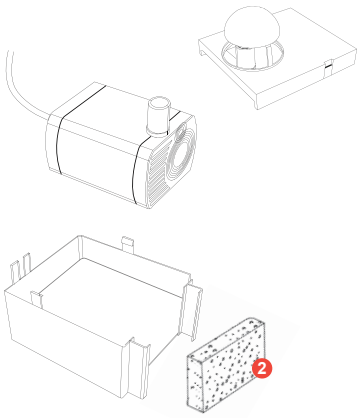

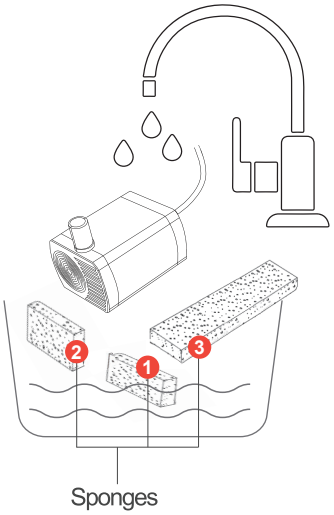

Note 1:Do not use any detergent as they can disruptthe nutrient balance

Note 2:Be sure do not to lose the sponge inside the water pump:

Reason 1.Prevent plant roots or other debris from entering the water pump.

Reason 2.Reduce the noise when the water pump is working.

HOW TO FIND AND INSTALL Smart Life APP

1.you can scan this QR code or APP STROE for installing "Smart Life"APP to mobile device.

NOTE

If the app store requires mobile phone authorization is because the APP has the free function of plant diary and needs to take pictures. This authorization is only for the use of the APP.

2.Long press SETUP button for 3 seconds , The device will make a long beep sound and come to"scan mode" for wifi connection.

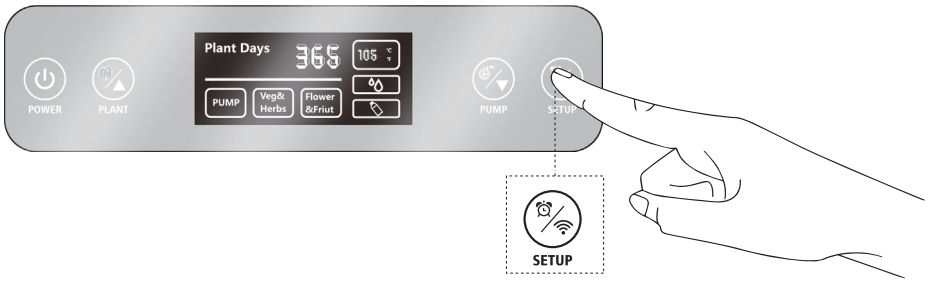

If you are unable to successfully connect to the WiFi, please check the following issues:

A.Ensure that you have entered the correct WiFi password. Check if the password entered in the input field is accurate, including letter case, password length, etc.

B.Consult your router service provider to determine if your network combines both 5GHZ and 2.4GHz frequencies. If it does, ask them to split your WiFi into two separate SSIDs with different passwords. This will ensure that the device connects to the 2.4GHz WiFi.

3.Open the Smart Life app and follow the guidelines to setup the network .

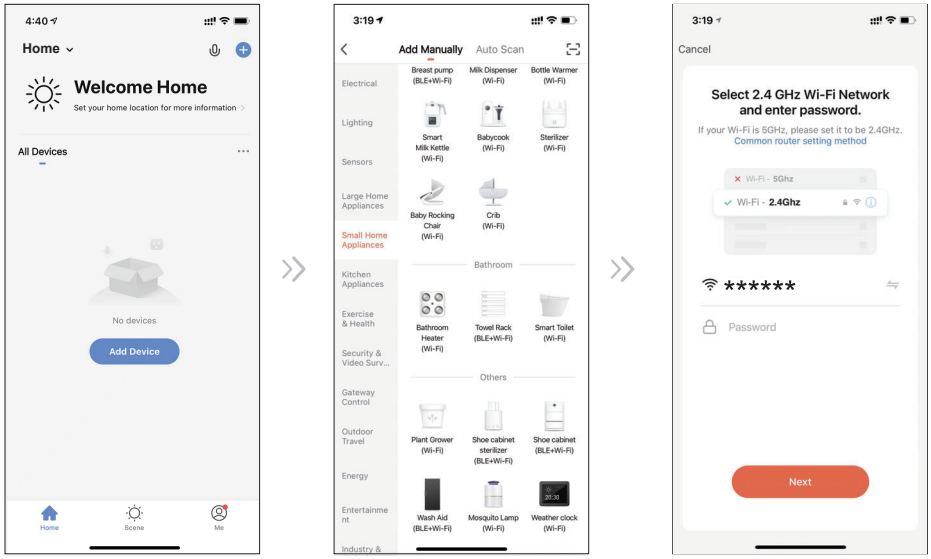

4.Function introduction

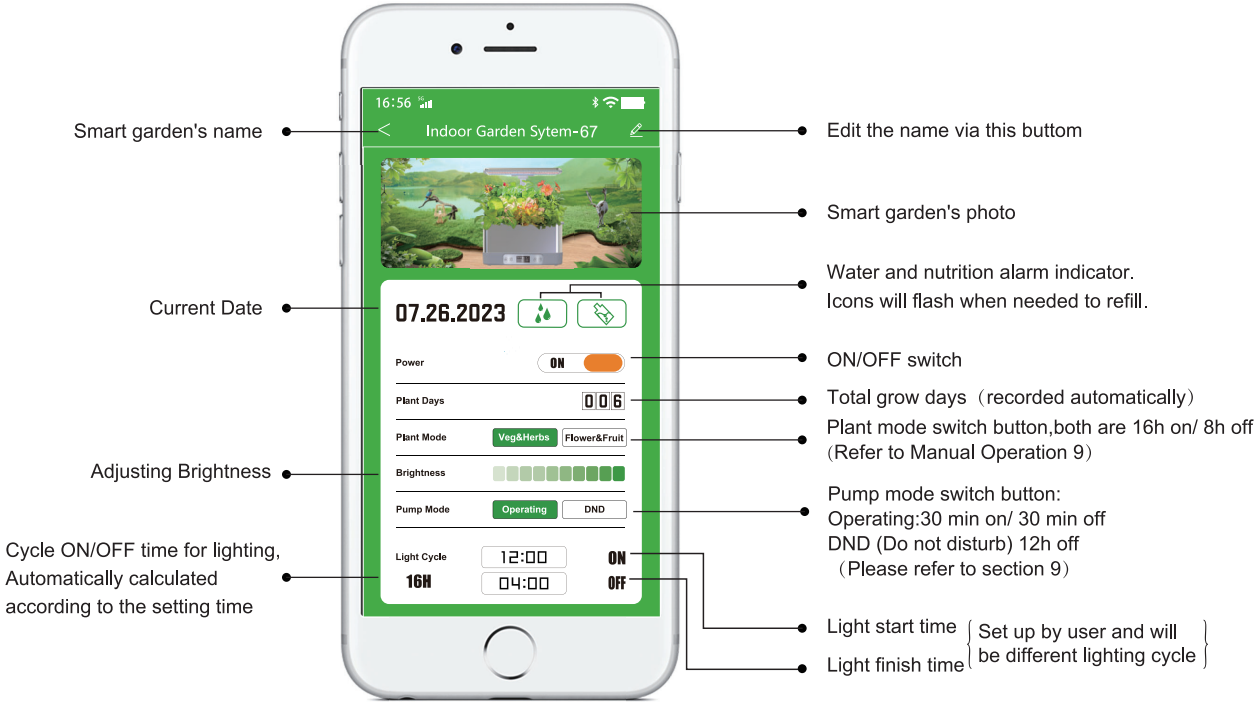

The Most Important:

1: After showing successful connection in the software Smart Life APP, you can disconnect the Bluetooth, cell phone positioning, WIFI function. As long as the cell phone has a network, you can control the hydroponic system from far away; For Example: you can sit in the company office to control the hydroponic system at home;

FAQ

1. Why do only a few of the plants grow and once grown, they quickly wither?

a. The seeds you purchase make a diff erence. For best results, purchase seeds from reliable-manufacturers and avoid purchasing seeds that are not suitable for water hydroponic devices.
b. Ensure you are using the correct proportion of nutrient solution to water, LED light distancefrom the plants and temperature as stated in the user guide.

2. Does it kill the plant to remove it from a sponge (if I want to move it to a pot, for example)?

Normally, it won't,you'd better wait until it's vigorous to improve survival rates.

3. Why the LED light can not be turned on?

Push or re-insert the rod down into the bottom until you hear a "Beep" sound, and then press the "POWER" button, the light will be on.

4. How to clean the water pump?

Step 1. Turn the power off
Step 2.Remove the extendable rod and the top cover of the water tank.
Step 3. Take out the sponge in front of the water pump and rinse it with water.Any washing liquid will harm the nutrition balance. (if it is very dirty, please rinse the water pump all together
Step 4.Install those back and restart the machine.

5.If you are unable to successfully connect to the WiFi,please check the following issues:

A. Ensure that you have entered the correct WiFi password.Check if the password entered in the input field is accurate, including letter case password length, etc.
B. Consult your router service provider to determine if your networkcombines both 5GHz and 2.4GHz freauencies.If it does. ask them to split your WiFi into two separate SSIDs with different passwords. This will ensure that the device connects to the 2.4GHz WiFi.
C. Place your router, mobile phone, and device as close as possible.

FCC WARNING

This device complies with part 15 of the FCC Rules. Operation is subject to the following two conditions:
(1) this device may not cause harmful interference, and (2) this device must accept
any interference received, including interference that may cause undesired operation.
Any changes or modifications not expressly approved by the party responsible for compliance could void the user's authority to operate the equipment.

NOTE: This equipment has been tested and found to comply with the limits for a Class B digital device, pursuant to Part 15 of the FCC Rules. These limits are designed to provide reasonable protection against harmful interference in a residential installation. This equipment generates, uses and can radiate radio frequency energy and, if not installed and used in accordance with the instructions, may cause harmful interference to radio communications.
However, there is no guarantee that interference will not occur in a particular installation.
If this equipment does cause harmful interference to radio or television reception,
which can be determined by turning the equipment off and on, the user is encouraged to try to correct the interference by one or more of the following measures:

-- Reorient or relocate the receiving antenna.
-- Increase the separation between the equipment and receiver.
-- Connect the equipment into an outlet on a circuit different from that to which the receiver is connected.
-- Consult the dealer or an experienced radio/TV technician for help.

To maintain compliance with FCC’s RF Exposure guidelines, This equipment should be installed and operated with minimum distance between 20cm the radiator your body: Use only the supplied antenna.