PROPEL EV

WWW.RIDEPROPEL.COM

OPERATION MANUAL

FOR

PIVOT

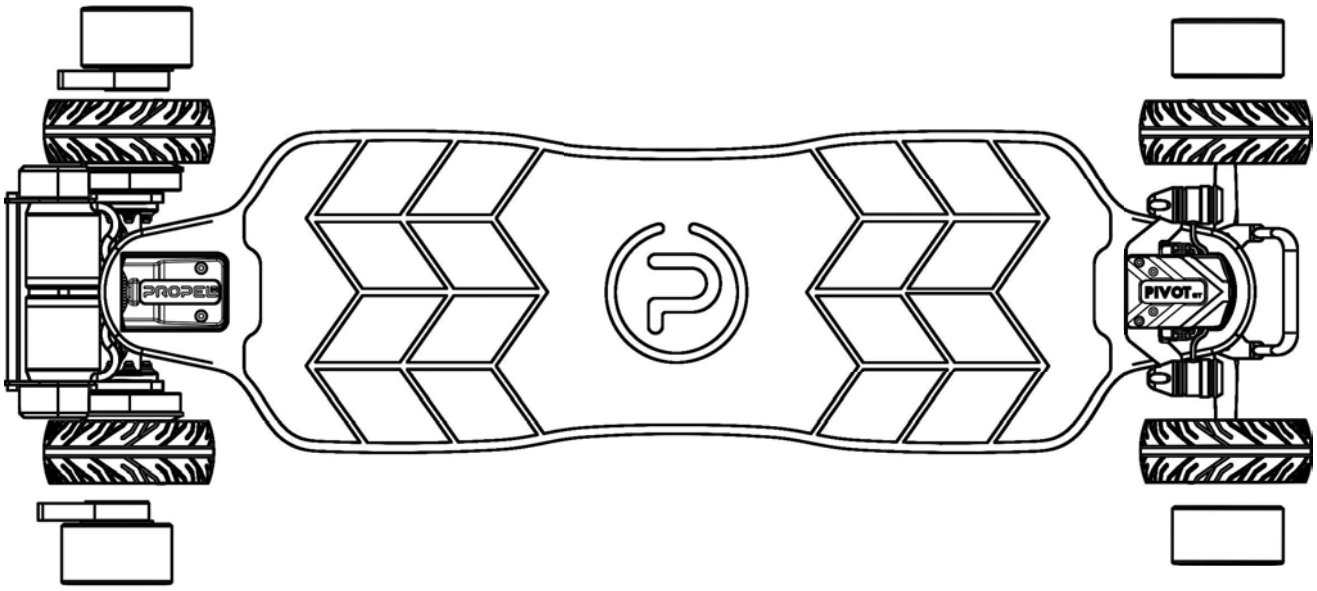

QUICK NAVIGATION

CONTENTS

PIVOT COMPONENTS 1

PRE-RIDE CHECKLIST 2

POWER ON/OFF 3

REMOTE CONTROL 4

CHANGING WHEELS 6

FCC WARNING 7

NOTE

ALL PICTURES ARE FOR ILLUSTRATION AND ILLUSTRATION ONLY. DIFFERENT SERIES OF PIVOT PRODUCTS MAY DIFFER IN APPEARANCE AND MATERIAL. PLEASE REFER TO THE ACTUAL PRODUCT.

PIVOT COMPONENTS

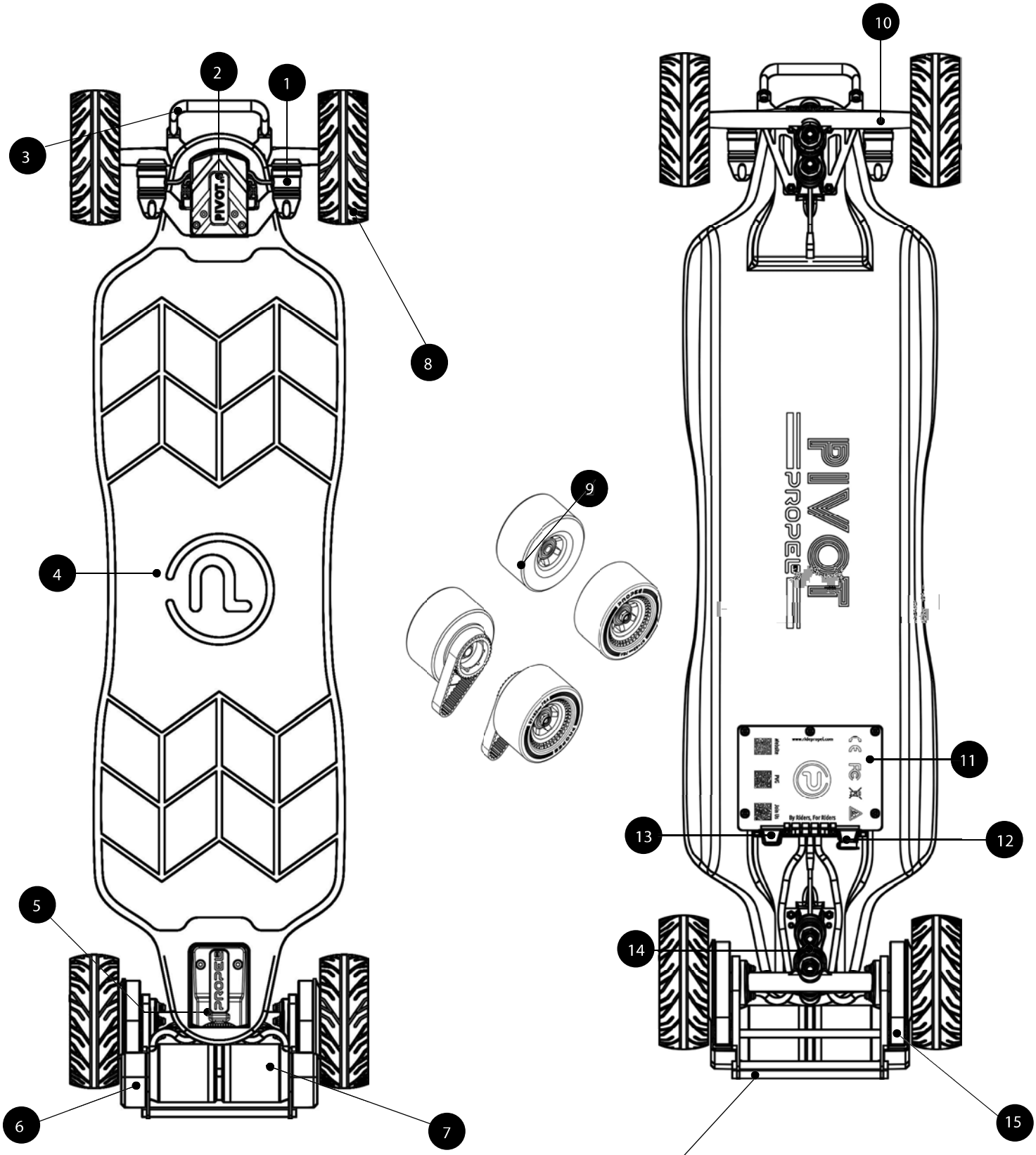

1. HEADLIGHT(OPTIONAL)
2. FRONT BADGE
3. PULL BAR(OPTIONAL)
4. DECK
5. TAIL LIGHT
6. BELT GUARD
7. MOTOR
8. AT WHEEL
9. PU WHEEL
10. DKP TRUCK
11. INTERNAL ACCESS PANEL/HEAT SINK
12. CHARGING PORT
13. POWER BUTTON
14. BUSHING
15. BELT
16. MOTOR PROTECTION BRACKET

PRE-RIDE CHECKLIST

BEFORE EACH RIDE, INSPECT YOUR BOARD AND REMOTE FOR DAMAGE. DO NOT RIDE IF DAMAGED.

CHECK WHETHER THE PARTS ARE DEFORMED OR WORN.

CHECK WHETHER THE SCREWS ARE LOOSE BEFORE USE AND OFTEN THROUGHOUT OWNERSHIP.

AFTER THE SKATEBOARD IS STARTED, CHECK FOR ABNORMAL SOUNDS. DO NOT USE IT UNTIL THE CAUSE OF THE ABNORMAL SOUND IS FOUND AND RESOLVED.

CHECK BOTH THE FRONT AND REAR TRUCKS AND THAT ALL FOUR WHEELS ARE SECURE.

BE SURE TO MAINTAIN YOUR TIRE PRESSURE.

PROPERLY SECURE YOUR HELMET AND PROTECTIVE PADS.

MAKE SURE YOUR BOARD AND REMOTE BATTERIES ARE FULLY CHARGED.

READ THE SAFETY INSTRUCTIONS IN THE PACKAGE CAREFULLY AND FOLLOW IT.

PUSH THE BOARD TO START A FANTASTIC RIDE

POWER ON/OFF

ROLLING START: This board is equipped with “rolling start” which means you can shove/push the board ahead and once it has reached a speed that is over 5km/h it will turn itself on (You will hear a beep).

POWER ON: The power button is a self-reset switch, which is installed at the bottom of the PIVOT, close to the motor side.

POWER OFF: Press the power button or leave the skateboard stationary for 5 minutes, and the skateboard will automatically turn off.

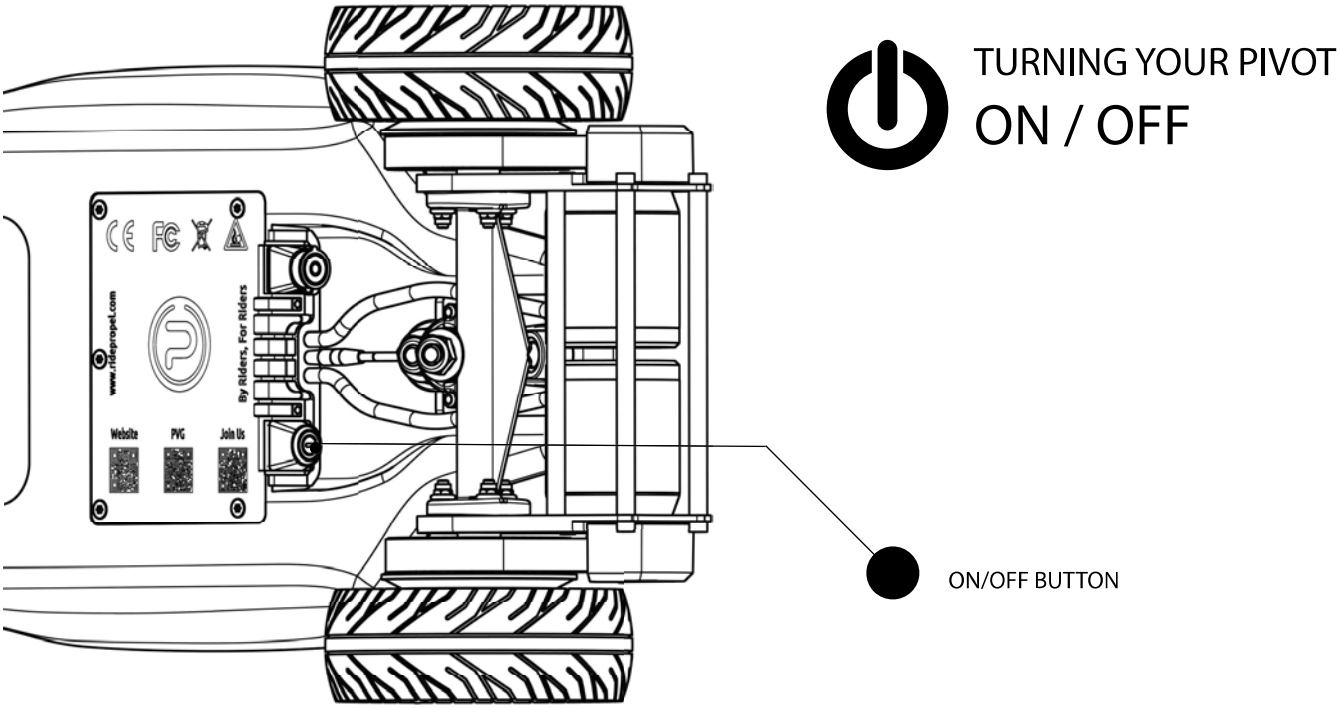

REMOTE CONTROL

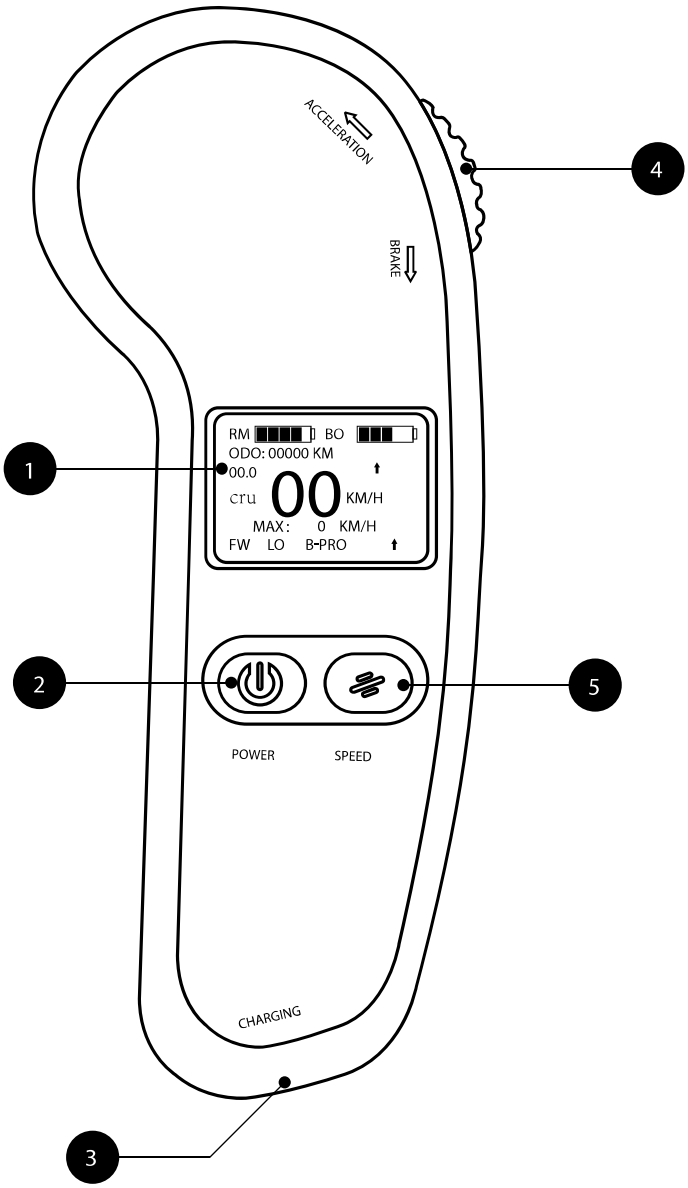

1. LCD DISPLAY SCREEN
2. POWER BUTTON
3. CHARGER PORT
4. ACCELERATE/BRAKE WHEEL
5. SPEED/FUNCTION BUTTON

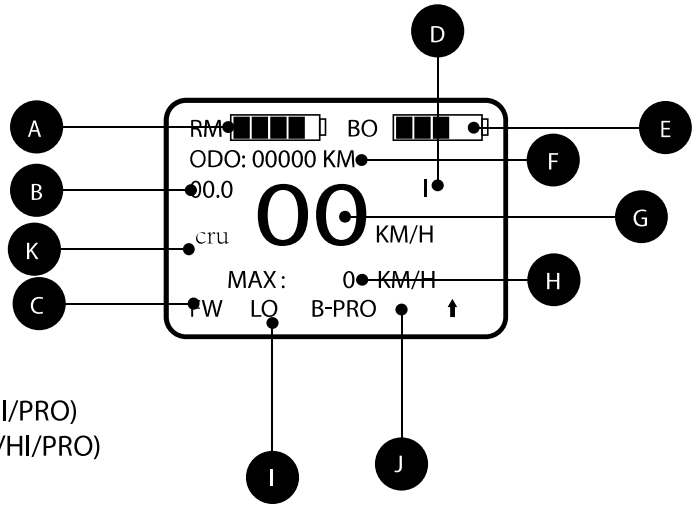

A. REMOTE BATTERY
B. TRIP DISTANCE
C. DRIVE MODE (FW/RW)
D. CURRENT INDICATION
E. BOARD BATTERY

F. TOTAL DISTANCE
G. SPEED
H. TOP SPEED
I. SPEED LEVEL(LO/MI/HI/PRO)
J. BRAKE LEVEL(B-LO/MI/HI/PRO)
K. CRUISE MODE

REMOTE PAIRING

1. Begin with the board and the remote turned off.

2. Turn on the board by depressing the power button, and release. The power button should illuminate.

3. Depress power button again and hold for 5-7 seconds utill it begins flashing, depress. The flashing power button means it's ready to pair.

4. Turn on remote.

5. Press both buttons for 1 second, simultaneously, release. (You'll see the battery meter populate)

6. Board is now paired.

REMOTE FUNCTIONS

(1) Scroll wheel

Push the wheel forward to accelerate, and push the wheel backward to slow down.

(2) Cruise control

During acceleration, short press the power button once to switch to the cruise mode. Pull the acceleration/deceleration wheel to end the cruise state. In the constant speed cruising state, if the skateboard and the remote control are disconnected, the skateboard will stop slowly.

NOTE

The cruise control function is an advanced function.
Please use it with caution before you are familiar with it. Please do not perform special actions during the cruise control. Please end the cruise control function before you need to change gears or perform other operations.

(3) Vibration

The remote control will vibrate in the following two situations:

- When the skateboard battery is less than 25%.
- When the remote control fails to connect to the skateboard.

Note: The safe wireless control distance between the remote control and the skateboard is 2 meters.

CHANGING WHEELS

The wheel replacement of PIVOT 2-IN-1 is very simple.

1. Loosen the bolt next to the wheel.
2. Take the wheel and gear out.
3. Install the new wheel.
4. Tighten the nut.

NOTE: PIVOT's default wheel size and gear ratio are pre-calculated for you to make wheel changing easier and simpler. Our stock PU wheel and AT wheel can share the same configuration, so you don't need to adjust the position of the motor or any parameters within the remote.

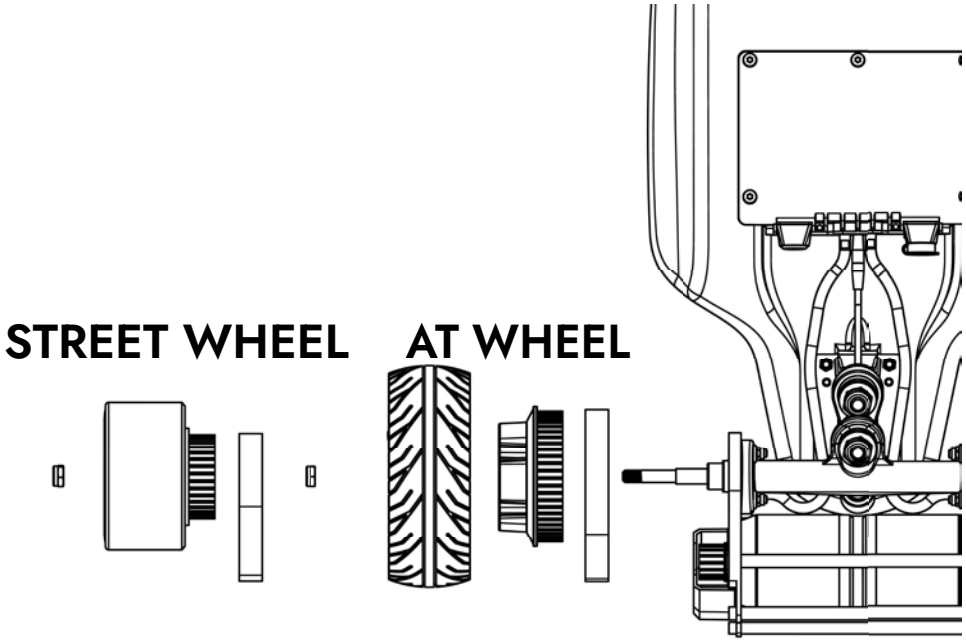

NOTE

For other third party wheel options please consult the third party wheel manufacturer, check their adaptation tables, check our accessory store, or send an email to services@ridepropel.com with any question you may have. We are here to help.

FCC WARNING

This device complies with part 15 of the FCC Rules. Operation is subject to the following two conditions:
(1) this device may not cause harmful interference, and
(2) this device must accept any interference received, including interference that may cause undesired operation.
Any changes or modifications not expressly approved by the party responsible for compliance could void the user's authority to operate the equipment.
NOTE: This equipment has been tested and found to comply with the limits for a Class B digital device, pursuant to Part 15 of the FCC Rules. These limits are designed to provide reasonable protection against harmful interference in a residential installation. This equipment generates, uses and can radiate radio frequency energy and, if not installed and used in accordance with the instructions, may cause harmful interference to radio communications. However, there is no guarantee that interference will not occur in a particular installation.
If this equipment does cause harmful interference to radio or television reception,
which can be determined by turning the equipment off and on, the user is encouraged to try to correct the interference by one or more of the f ollowing measures:
– Reorient or relocate the receiving antenna.
– Increase the separation between the equipment and receiver.
– Connect the equipment into an outlet on a circuit different from that to which the receiver is connected.
– Consult the dealer or an experienced radio/TV technician for help.
The device has been evaluated to meet general RF exposure requirement. The device can be used in portable exposure condition without restriction

PROPEL EV

WWW.RIDEPROPEL.COM

EMAIL:SERVICES@RIDEPROPEL.COM / MKT@RIDEPROPEL.COM