TEST REPORT

Report No.:	BCTC2307246741E
Applicant:	ShanTou ChengHai XinYanMeng Toys Co., Ltd.
Product Name:	Toys series
Model/Type reference:	XYM08-5
Tested Date:	2023-07-19 to 2023-07-26
Issued Date:	2023-07-26

Shenzhen BCTC Testing Co., Ltd.

FCC ID: 2A556-XYM20092

Product Name:	Toys series
Trademark:	N/A
Model/Type Ref.:	XYM08-5 791416 .RCS-6/2073, XYM08-6, XYM08-7, XYM08-8, XYM08-9, XYM08-10, XYM08-11, XYM08-12, XYM08-13, XYM08-14, XYM08-15, XYM08-16, XYM08-17, XYM08-18, XYM08-19, XYM08-20
Prepared For:	ShanTou ChengHai XinYanMeng Toys Co., Ltd.
Address:	Chenghai District, Shantou City, Guangdong Province, China
Manufacturer:	ShanTou ChengHai XinYanMeng Toys Co., Ltd.
Address:	Chenghai District, Shantou City, Guangdong Province, China
Prepared By:	Shenzhen BCTC Testing Co., Ltd.
Address:	1-2/F., Building B, Pengzhou Industrial Park, No.158, Fuyuan 1st Road, Zhancheng, Fuhai Subdistrict, Bao'an District, Shenzhen, Guangdong, China
Sample Received Date:	2023-07-19
Sample tested Date:	2023-07-19 to 2023-07-26
Issue Date:	2023-07-26
Report No.:	BCTC2307246741E
Test Standards:	FCC Part15.247 ANSI C63.10-2013
Test Results:	PASS
Remark:	This is SRD-2.4GHz radio test report.

Tested by:

Lei Chen

Lei Chen/Project Handler

Approved by:

Zero Zhou/Reviewer

The test report is effective only with both signature and specialized stamp.This result(s) shown in this report refer only to the sample(s) tested. Without written approval of Shenzhen BCTC Testing Co., Ltd, this report can't be reproduced except in full.The tested sample(s) and the sample information are provided by the client.

Table Of Content

Test Report Declaration Page
1. Version 5
2. Test Summary 6
3. Measurement Uncertainty 7
4. Product Information And Test Setup 8
4.1 Product Information 8
4.2 Test Setup Configuration 9
4.3 Support Equipment 9
4.4 Channel List 10
4.5 Test Mode 11
4.6 Table of parameters of text software setting 11
5. Test Facility And Test Instrument Used 12
5.1 Test Facility 12
5.2 Test Instrument Used 12
6. Conducted Emissions 14
6.1 Block Diagram Of Test Setup 14
6.2 Limit 14
6.3 Test procedure 14
6.4 EUT Operating Conditions 14
6.5 Test Result 15
7. Radiated Emissions 16
7.1 Block Diagram Of Test Setup 16
7.2 Limit 17
7.3 Test procedure 18
7.4 EUT operating Conditions 19
7.5 Test Result 20
8. Radiated Band Emission Measurement And Restricted Bands Of Operation 24
8.1 Block Diagram Of Test Setup 24
8.2 Limit 24
8.3 Test Procedure 25
8.4 EUT Operating Conditions 25
8.5 Test Result 26
9. Power Spectral Density Test 27
9.1 Block Diagram Of Test Setup 27
9.2 Limit 27
9.3 Test procedure 27
9.4 EUT Operating Conditions 27
9.5 Test Result 28
10. Bandwidth Test 30
10.1 Block Diagram Of Test Setup 30
10.2 Limit 30
10.3 Test procedure 30
10.4 EUT operating Conditions 30
10.5 Test Result 31
11. Peak Output Power Test 33
11.1 Block Diagram Of Test Setup 33
11.2 Limit 33

11.3 Test Procedure 33
11.4 EUT Operating Conditions 33
11.5 Test Result 33
12. 100 kHz Bandwidth Of Frequency Band Edge 34
12.1 Block Diagram Of Test Setup 34
12.2 Limit 34
12.3 Test procedure 34
12.4 EUT operating Conditions 34
12.5 Test Result 35
13. Antenna Requirement 37
13.1 Limit 37
13.2 Test Result 37
14. EUT Photographs 38
15. EUT Test Setup Photographs 39

(Note: N/A Means Not Applicable)

1. Version

Report No.	Issue Date	Description	Approved
BCTC2307246741E	2023-07-26	Original	Valid

2. Test Summary

The Product has been tested according to the following specifications:

No.	Test Parameter	Clause No.	Results
1	Conducted Emission	15.207	N/A
2	6dB Bandwidth	15.247 (a)(2)	PASS
3	Peak Output Power	15.247 (b)	PASS
4	Radiated Spurious Emission	15.247 (d), 15.205	PASS
5	Power Spectral Density	15.247 (e)	PASS
6	Restricted Band of Operation	15.205	PASS
7	Band Edge (Out of Band Emissions)	15.247(d)	PASS
8	Antenna Requirement	15.203	PASS

3. Measurement Uncertainty

Where relevant, the following measurement uncertainty levels have been estimated for tests performed on the Product as specified in CISPR 16-4-2. This uncertainty represents an expanded uncertainty expressed at approximately the 95% confidence level using a coverage factor of k=2.

No.	Item	Uncertainty
1	3m chamber Radiated spurious emission(30MHz-1GHz)	U=4.3dB
2	3m chamber Radiated spurious emission(9KHz-30MHz)	U=3.7dB
3	3m chamber Radiated spurious emission(1GHz-18GHz)	U=4.5dB
4	3m chamber Radiated spurious emission(18GHz-40GHz)	U=3.34dB
5	Conducted Emission (150kHz-30MHz)	U=3.20dB
6	Conducted Adjacent channel power	U=1.38dB
7	Conducted output power uncertainty Above 1G	U=1.576dB
8	Conducted output power uncertainty below 1G	U=1.28dB
9	humidity uncertainty	U=5.3%
10	Temperature uncertainty	U=0.59℃

4. Product Information And Test Setup

4.1 Product Information

Model/Type reference:	XYM08-5 791416 .RCS-6/2073, XYM08-6, XYM08-7, XYM08-8, XYM08-9, XYM08-10, XYM08-11, XYM08-12, XYM08-13, XYM08-14, XYM08-15, XYM08-16, XYM08-17, XYM08-18, XYM08-19, XYM08-20
Model differences:	All the model are the same circuit and RF module, except model names
Hardware Version:	N/A
Software Version:	N/A
Operation Frequency:	2410MHz-2473MHz
Type of Modulation:	GFSK
Number Of Channel:	6CH
Antenna installation:	Wire antenna
Antenna Gain:	0.98dBi
Ratings:	DC 3V

4.2 Test Setup Configuration

See test photographs attached in *EUT TEST SETUP PHOTOGRAPHS* for the actual connections between Product and support equipment.

Conducted Emission:

E-1
EUT

Radiated Spurious Emission

E-1
EUT

4.3 Support Equipment

No.	Device Type	Brand	Model	Series No.	Note
E-1	Toys series	N/A	XYM08-5	N/A	EUT

Notes:

1. All the equipment/cables were placed in the worst-case configuration to maximize the emission during the test.

2. Grounding was established in accordance with the manufacturer's requirements and conditions for the intended use.

4.4 Channel List

Channel Number	Frequency (MHz)	Channel Number	Frequency (MHz)	Channel Number	Frequency (MHz)	Channel Number	Frequency (MHz)
1	2410	2	2415	3	2427	4	2437
5	2445	6	2473				

4.5 Test Mode

To investigate the maximum EMI emission characteristics generates from EUT, the test system was pre-scanning tested base on the consideration of following EUT operation mode or test configuration mode which possible have effect on EMI emission level. Each of these EUT operation mode(s) or test configuration mode(s) mentioned above was evaluated respectively.

For All Mode	Description	Modulation Type
Mode 1	CH 1	GFSK
Mode 2	CH 5	
Mode 3	CH 6	
Mode 4	Transmiting (Radiated emission)	

Note:

(1) The measurements are performed at the highest, middle, lowest available channels.

(2) Fully-charged battery is used during the test

4.6 Table of parameters of text software setting

During testing channel & power controlling software provided by the customer was used to control the operating channel as well as the output power level. The RF output power selection is for the setting of RF output power expected by the customer and is going to be fixed on the firmware of the final end product power parameters

Test software Version	N/A		
Frequency	2410 MHz	2445 MHz	2473 MHz
Parameters	DEF	DEF	DEF

5. Test Facility And Test Instrument Used

5.1 Test Facility

All measurement facilities used to collect the measurement data are located at Shenzhen BCTC Testing Co., Ltd. Address: 1-2/F., Building B, Pengzhou Industrial Park, No.158, Fuyuan 1st Road, Zhancheng, Fuhai Subdistrict, Bao'an District, Shenzhen, Guangdong, China. The site and apparatus are constructed in conformance with the requirements of ANSI C63.4 and CISPR 16-1-1 other equivalent standards.
FCC Test Firm Registration Number: 712850
FCC Designation Number: CN1212
ISED Registered No.: 23583
ISED CAB identifier: CN0017

5.2 Test Instrument Used

RF Conducted Test					
Equipment	**Manufacturer**	**Model#**	**Serial#**	**Last Cal.**	**Next Cal.**
Power Metter	Keysight	E4419	\	May 15, 2023	May 14, 2024
Power Sensor (AV)	Keysight	E9300A	\	May 15, 2023	May 14, 2024
Signal Analyzer20kHz-26.5GHz	Keysight	N9020A	MY49100060	May 15, 2023	May 14, 2024
Spectrum Analyzer 9kHz-40GHz	R&S	FSP 40	\	May 15, 2023	May 14, 2024

Radiated Emissions Test (966 Chamber01)					
Equipment	**Manufacturer**	**Model#**	**Serial#**	**Last Cal.**	**Next Cal.**
966 chamber	ChengYu	966 Room	966	May 15, 2023	May 14, 2026
Receiver	R&S	ESR3	102075	May 15, 2023	May 14, 2024
Receiver	R&S	ESRP	101154	May 15, 2023	May 14, 2024
Amplifier	Schwarzbeck	BBV9744	9744-0037	May 15, 2023	May 14, 2024
TRILOG Broadband Antenna	Schwarzbeck	VULB9163	942	May 29, 2023	May 28, 2024
Loop Antenna(9KHz -30MHz)	Schwarzbeck	FMZB1519B	00014	May 31, 2023	May 30, 2024
Amplifier	SKET	LAPA_01G18 G-45dB	\	May 15, 2023	May 14, 2024
Horn Antenna	Schwarzbeck	BBHA9120D	1541	May 31, 2023	May 30, 2024
Amplifier(18G Hz-40GHz)	MITEQ	TTA1840-35-HG	2034381	May 15, 2023	May 14, 2024
Horn Antenn(18GH z-40GHz)	Schwarzbeck	BBHA9170	00822	May 31, 2023	May 30, 2024
Spectrum Analyzer9kHz-40GHz	R&S	FSP40	100363	May 15, 2023	May 14, 2024
Software	Frad	EZ-EMC	FA-03A2 RE	\	\

6. Conducted Emissions

6.1 Block Diagram Of Test Setup

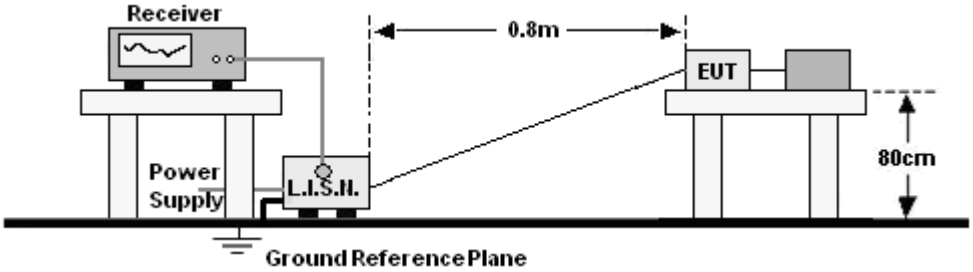

6.2 Limit

Frequency (MHz)	Limit (dBuV)	
	Quas-peak	Average
0.15 -0.5	66 - 56 *	56 - 46 *
0.50 -5.0	56.00	46.00
5.0 -30.0	60.00	50.00

Notes:
1. *Decreasing linearly with logarithm of frequency.
2. The lower limit shall apply at the transition frequencies.

6.3 Test procedure

Receiver Parameters	Setting
Attenuation	10 dB
Start Frequency	0.15 MHz
Stop Frequency	30 MHz
IF Bandwidth	9 kHz

a. The Product was placed on a nonconductive table 0.8 m above the horizontal ground reference plane, and 0.4 m from the vertical ground reference plane, and connected to the main through Line Impedance Stability Network (L.I.S.N).

b. The RBW of the receiver was set at 9 kHz in 150 kHz ~ 30MHz with Peak and AVG detector in Max Hold mode. Run the receiver's pre-scan to record the maximum disturbance generated from Product in all power lines in the full band.

c. For each frequency whose maximum record was higher or close to limit, measure its QP and AVG values and record.

6.4 EUT Operating Conditions

The EUT was configured for testing in a typical fashion (as a customer would normally use it). The EUT has been programmed to continuously transmit during test. This operating condition was tested and used to collect the included data.

6.5 Test Result

The EUT is powered by the DC only, the test item is not applicable.

7. Radiated Emissions

7.1 Block Diagram Of Test Setup

（A）Radiated Emission Test-Up Frequency Below 30MHz

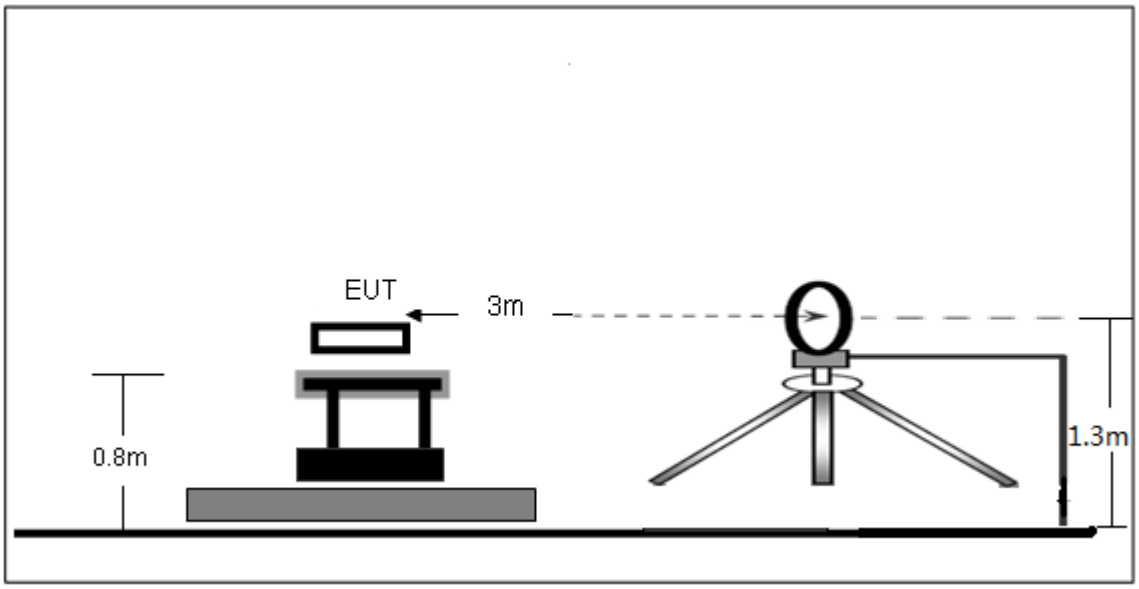

（B）Radiated Emission Test-Up Frequency 30MHz~1GHz

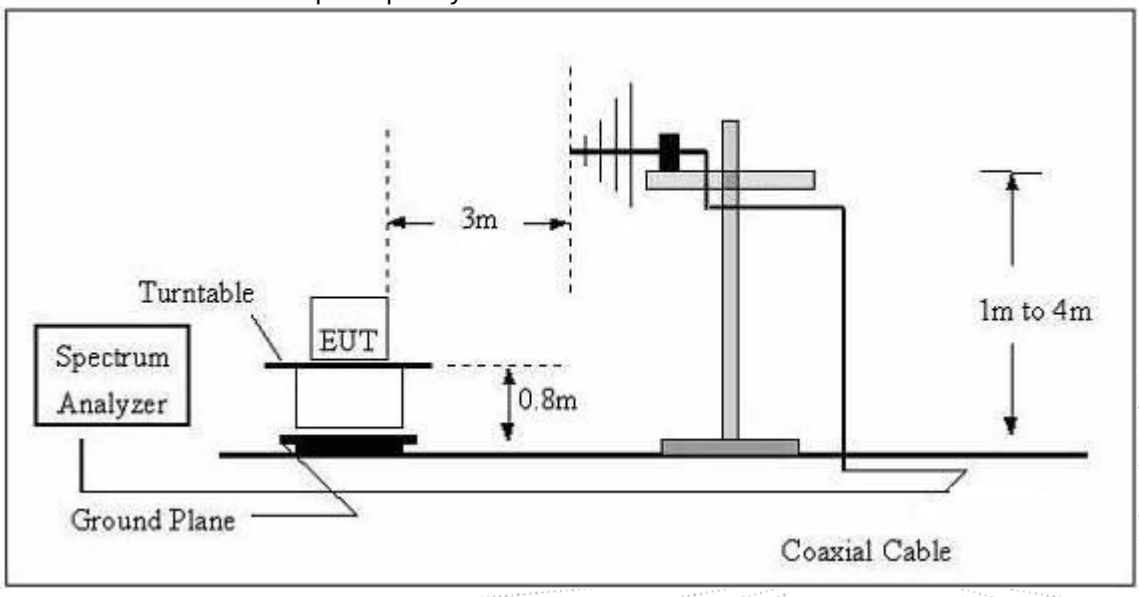

（C）Radiated Emission Test-Up Frequency Above 1GHz

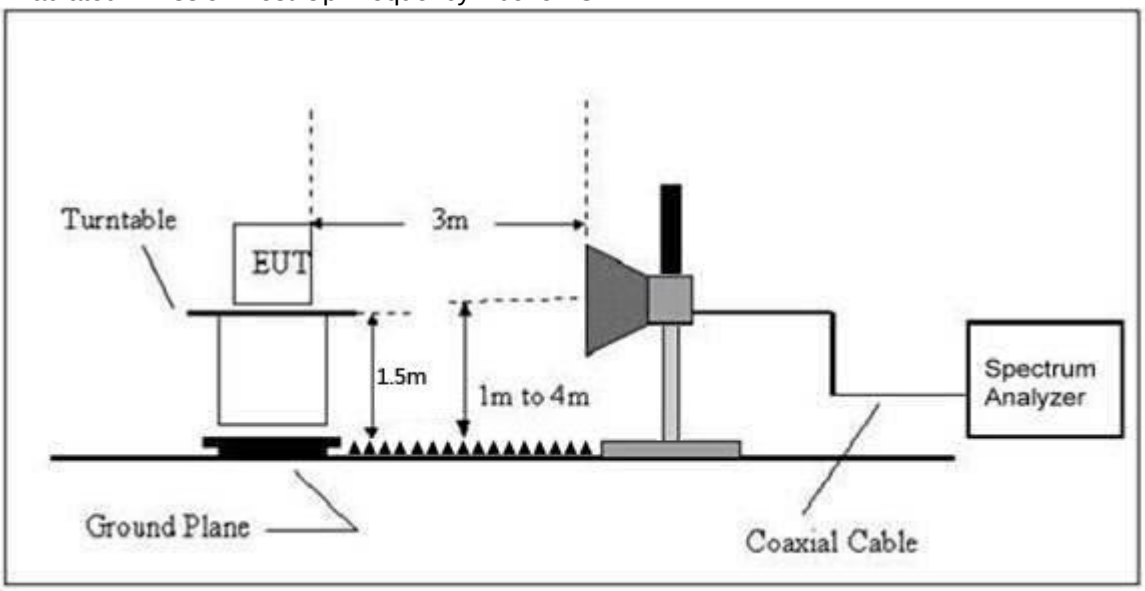

7.2 Limit

20dBc in any 100 kHz bandwidth outside the operating frequency band. In case the emission fall within the restricted band specified on 15.205(a), then the 15.209(a) limit in the table below has to be followed.

Frequency	Field Strength	Distance	Field Strength Limit at 3m Distance	
(MHz)	uV/m	(m)	uV/m	dBuV/m
0.009 ~ 0.490	2400/F(kHz)	300	10000 * 2400/F(kHz)	$20\log^{(2400/F(kHz))} + 80$
0.490 ~ 1.705	24000/F(kHz)	30	100 * 24000/F(kHz)	$20\log^{(24000/F(kHz))} + 40$
1.705 ~ 30	30	30	100 * 30	$20\log^{(30)} + 40$
30 ~ 88	100	3	100	$20\log^{(100)}$
88 ~ 216	150	3	150	$20\log^{(150)}$
216 ~ 960	200	3	200	$20\log^{(200)}$
Above 960	500	3	500	$20\log^{(500)}$

Limits Of Radiated Emission Measurement (Above 1000MHz)

Frequency (MHz)	Limit (dBuV/m) (at 3M)	
	Peak	Average
Above 1000	74	54

Notes:
(1)The limit for radiated test was performed according to FCC PART 15C.
(2)The tighter limit applies at the band edges.
(3) Emission level (dBuV/m)=20log Emission level (uV/m).

Frequency Range Of Radiated Measurement (For unintentional radiators)

Highest frequency generated or Upper frequency of measurement used in the device or on which the device operates or tunes (MHz)	Range (MHz)
Below 1.705	30
1.705 – 108	1000
108 – 500	2000
500 – 1000	5000
Above 1000	5th harmonic of the highest frequency or 40 GHz, whichever is lower

7.3 Test procedure

Receiver Parameter	Setting
Attenuation	Auto
9kHz~150kHz	RBW 200Hz for QP
150kHz~30MHz	RBW 9kHz for QP
30MHz~1000MHz	RBW 120kHz for QP

Spectrum Parameter	Setting
1-25GHz	RBW 1 MHz /VBW 1 MHz for Peak, RBW 1 MHz / VBW 10Hz for Average

Below 30MHz test procedure as below:
a. The EUT was placed on the top of a rotating table 0.8 meters above the ground at a 3 meter semi-anechoic chamber. The table was rotated 360 degrees to determine the position of the highest radiation.
b. The EUT was set 3 meters away from the interference-receiving antenna, The antenna installation height is determined by the antenna center being 1.3 meters above the ground.
c. The antenna center height is 1.3 meters above the ground to determine the maximum value of the field strength. Measurements shall be performed with the loop antenna placed vertically, in turn, in two polarizations (the measurement axis specified below is the line segment connecting the projections on the ground plane of the centre of the loop antenna and the centre of the EUT arrangement):
coaxial (loop plane perpendicular to the ground plane and to the measurement axis);
coplanar (loop plane perpendicular to the ground plane and coplanar with the measurement axis).
d. For each suspected emission, the EUT was arranged to its worst case , the rotatable table was turned from 0 degrees to 360 degrees to find the maximum reading.
e. The test-receiver system was set to Peak Detect Function and Specified Bandwidth with Maximum Hold Mode.
f. If the emission level of the EUT in peak mode was 10dB lower than the limit specified, then testing could be stopped and the peak values of the EUT would be reported. Otherwise the emissions that did not have 10dB margin would be re-tested one by one using peak, quasi-peak or average method as specified and then reported in a data sheet.

30M-1GHz test procedure as below:
a. The EUT was placed on the top of a rotating table 0.8 meters above the ground at a 3 meter semi-anechoic chamber. The table was rotated 360 degrees to determine the position of the highest radiation.
b. The EUT was set 3 meters away from the interference-receiving antenna, which was mounted on the top of a variable-height antenna tower.

c. The antenna height is varied from one meter to four meters above the ground to determine the maximum value of the field strength. Both horizontal and vertical polarizations of the antenna are set to make the measurement.
d. For each suspected emission, the EUT was arranged to its worst case and then the antenna was tuned to heights from 1 meter to 4 meters (for the test frequency of below 30MHz, the antenna was tuned to heights 1 meter) and the rotatable table was turned from 0 degrees to 360 degrees to find the maximum reading.
e. The test-receiver system was set to Peak Detect Function and Specified Bandwidth with Maximum Hold Mode.
f. If the emission level of the EUT in peak mode was 10dB lower than the limit specified, then testing could be stopped and the peak values of the EUT would be reported. Otherwise the emissions that did not have 10dB margin would be re-tested one by one using peak, quasi-peak or average method as specified and then reported in a data sheet.
Above 1GHz test procedure as below:
g. Different between above is the test site, change from Semi- Anechoic Chamber to fully Anechoic Chamber and change form table 0.8 metre to 1.5 metre(Above 18GHz the distance is 1 meter and table is 1.5 metre).
h. Test the EUT in the lowest channel ,the middle channel ,the Highest channel.
Note:
Both horizontal and vertical antenna polarities were tested and performed pretest to three orthogonal axis. The worst case emissions were reported.

Above 1GHz test procedure as below:

a.The EUT was placed on the top of a rotating table 1.5 meters above the ground at a 3 meter camber. The table was rotated 360 degrees to determine the position of the highest radiation.

b.The EUT was set 3 meters away from the interference-receiving antenna, which was mounted on the top of a variable-height antenna tower.

c.The antenna height is varied from one meter to four meters above the ground to determine the maximum value of the field strength. Both horizontal and vertical polarizations of the antenna are set to make the measurement.

d.For each suspected emission, the EUT was arranged to its worst case and then the antenna was tuned to heights from 1 meter to 4 meters and the rota table was turned from 0 degrees to 360 degrees to find the maximum reading.

e.The test-receiver system was set to Peak Detect Function and Specified Bandwidth with Maximum Hold Mode.

f. If the emission level of the EUT in peak mode was 10dB lower than the limit specified, then testing could be stopped and the peak values of the EUT would be reported. Otherwise the emissions that did not have 10dB margin would be re-tested one by one using peak, quasi-peak or average method as specified and then reported in a data sheet.

g. Test the EUT in the lowest channel, the middlest channel, the Highest channel.

Note:

Both horizontal and vertical antenna polarities were tested and performed pretest to three orthogonal axis. The worst case emissions were reported.

7.4 EUT operating Conditions

The EUT was configured for testing in a typical fashion (as a customer would normally use it). The EUT has been programmed to continuously transmit during test. This operating condition was tested and used to collect the included data.

7.5 Test Result

Below 30MHz

Temperature:	26℃	Relative Humidity:	24%
Pressure:	101 kPa	Test Voltage:	DC 3V
Test Mode:	Mode 4		

Freq.	Reading	Limit	Margin	State
(MHz)	(dBuV/m)	(dBuV/m)	(dB)	P/F
--	--	--	--	PASS
--	--	--	--	PASS

Note:
The amplitude of spurious emissions which are attenuated by more than 20dB below the permissible value has no need to be reported.
Distance extrapolation factor =40 log (specific distance/test distance)(dB);
Limit line = specific limits(dBuv) + distance extrapolation factor.

Between 30MHz – 1GHz

Temperature:	26 ℃	Relative Humidity:	54%
Pressure:	101KPa	Phase :	Horizontal
Test Mode:	Mode 4	Test Voltage :	DC 3V

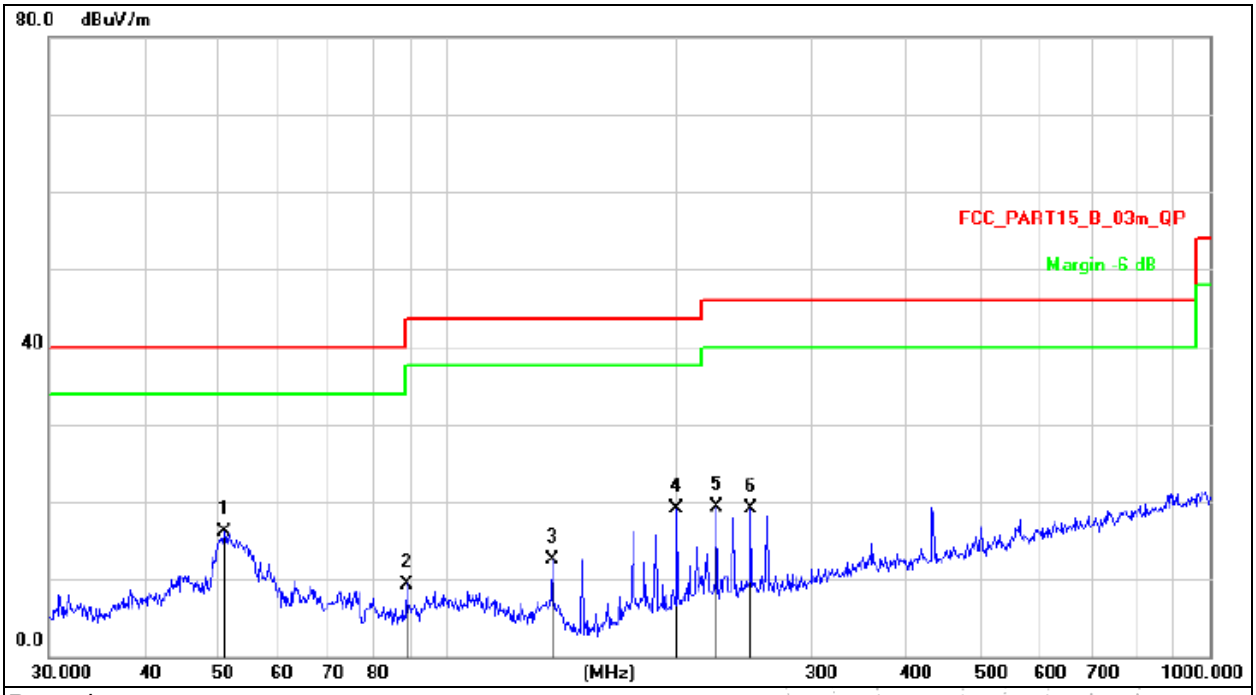

Remark:
1. Factor = Antenna Factor + Cable Loss – Pre-amplifier.
2. Measurement = Reading Level + Correct Factor
3. Over = Measurement - Limit

No.	Mk.	Freq.	Reading Level	Correct Factor	Measure-ment	Limit	Over	
		MHz	dBuV	dB	dBuV/m	dB/m	dB	Detector
1	*	50.9420	31.74	-15.73	16.01	40.00	-23.99	QP
2		88.3421	29.02	-19.62	9.40	43.50	-34.10	QP
3		137.4202	32.81	-20.22	12.59	43.50	-30.91	QP
4		199.9856	36.50	-17.37	19.13	43.50	-24.37	QP
5		225.3080	35.89	-16.59	19.30	46.00	-26.70	QP
6		250.3012	34.97	-15.82	19.15	46.00	-26.85	QP

Temperature:	26 ℃	Relative Humidity:	54%
Pressure:	101KPa	Phase :	Vertical
Test Mode:	Mode 4	Test Voltage :	DC 3V

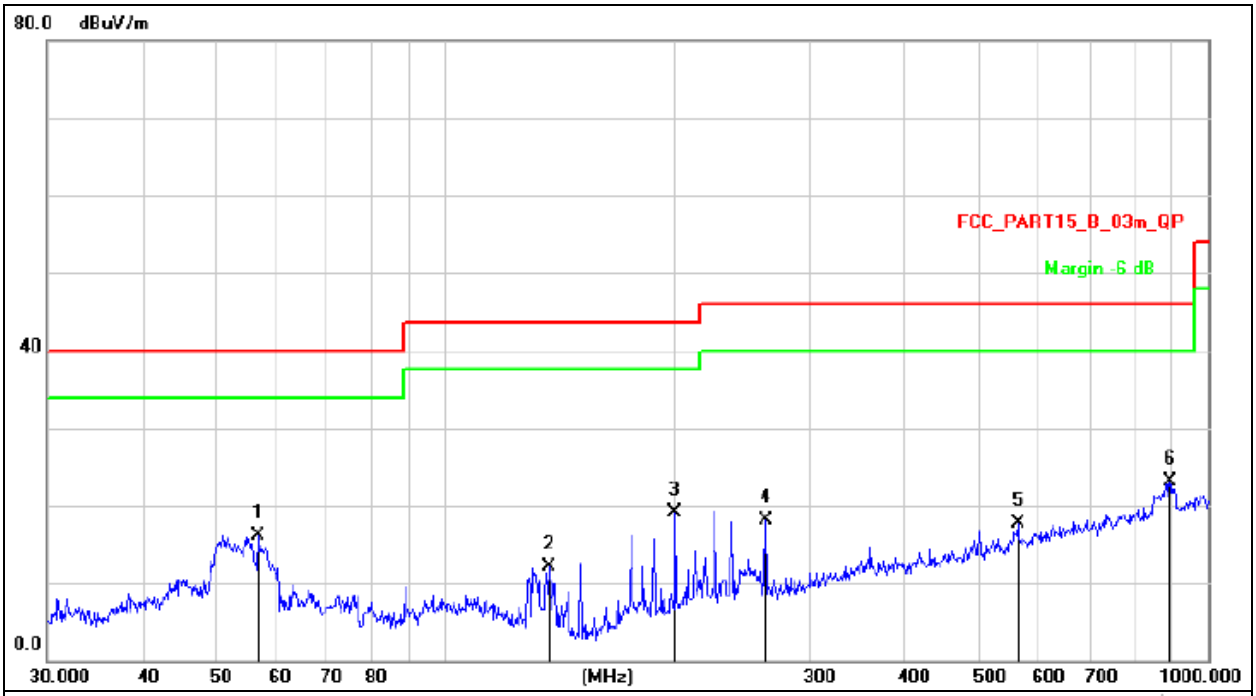

Remark:
1. Factor = Antenna Factor + Cable Loss – Pre-amplifier.
2. Measurement = Reading Level + Correct Factor
3. Over = Measurement - Limit

No.	Mk.	Freq.	Reading Level	Correct Factor	Measure-ment	Limit	Over	
		MHz	dBuV	dB	dBuV/m	dB/m	dB	Detector
1		56.7916	32.67	-16.61	16.06	40.00	-23.94	QP
2		136.4598	32.18	-20.16	12.02	43.50	-31.48	QP
3		199.9856	36.50	-17.37	19.13	43.50	-24.37	QP
4		262.8955	33.70	-15.51	18.19	46.00	-27.81	QP
5		562.6624	26.91	-9.24	17.67	46.00	-28.33	QP
6	*	890.7278	27.72	-4.69	23.03	46.00	-22.97	QP

Between 1GHz – 25GHz

GFSK							
Polar (H/V)	Frequency (MHz)	Reading Level (dBuV/m)	Correct Factor (dB)	Measure-ment (dBuV/m)	Limits (dBuV/m)	Over (dB)	Detector Type
Low channel							
V	4820.00	52.93	-10.81	42.12	74.00	-31.88	PK
V	4820.00	44.85	-10.81	34.04	54.00	-19.96	AV
V	7230.00	45.21	-2.98	42.23	74.00	-31.77	PK
V	7230.00	34.25	-2.98	31.27	54.00	-22.73	AV
H	4820.00	48.06	-10.81	37.25	74.00	-36.75	PK
H	4820.00	37.51	-10.81	26.70	54.00	-27.30	AV
H	7230.00	43.79	-2.98	40.81	74.00	-33.19	PK
H	7230.00	35.52	-2.98	32.54	54.00	-21.46	AV
Middle channel							
V	4890.00	49.84	-10.59	39.25	74.00	-34.75	PK
V	4890.00	41.03	-10.59	30.44	54.00	-23.56	AV
V	7335.00	41.25	-2.6	38.65	74.00	-35.35	PK
V	7335.00	32.58	-2.6	29.98	54.00	-24.02	AV
H	4890.00	47.22	-10.59	36.63	74.00	-37.37	PK
H	4890.00	36.76	-10.59	26.17	54.00	-27.83	AV
H	7335.00	39.70	-2.6	37.10	74.00	-36.90	PK
H	7335.00	31.59	-2.6	28.99	54.00	-25.01	AV
High channel							
V	4946.00	52.36	-10.42	41.94	74.00	-32.06	PK
V	4946.00	41.86	-10.42	31.44	54.00	-22.56	AV
V	7419.00	44.62	-2.3	42.32	74.00	-31.68	PK
V	7419.00	34.63	-2.3	32.33	54.00	-21.67	AV
H	4946.00	50.29	-10.42	39.87	74.00	-34.13	PK
H	4946.00	40.96	-10.42	30.54	54.00	-23.46	AV
H	7419.00	42.65	-2.3	40.35	74.00	-33.65	PK
H	7419.00	35.22	-2.3	32.92	54.00	-21.08	AV

Remark:

1.Emission Level = Meter Reading + Factor,Factor = Antenna Factor + Cable Loss – Pre-amplifier. Over= Emission Level - Limit

2.If peak below the average limit, the average emission was no test.

3. In restricted bands of operation, The spurious emissions below the permissible value more than 20dB

4. The amplitude of spurious emissions which are attenuated by more than 20dB below the permissible value has no need to be reported.

8. Radiated Band Emission Measurement And Restricted Bands Of Operation

8.1 Block Diagram Of Test Setup

Radiated Emission Test-Up Frequency Above 1GHz

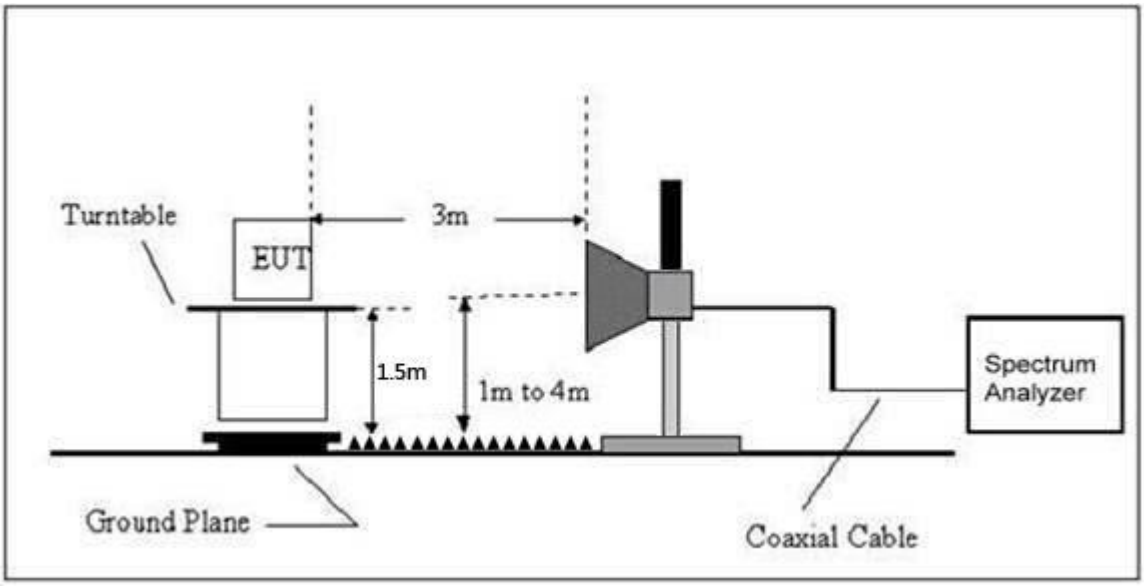

8.2 Limit

FCC Part15 C Section 15.209 and 15.205

(a) Except as shown in paragraph (d) of this section, only spurious emissions are permitted in any of the frequency bands listed below:

MHz	MHz	MHz	GHz
0.090-0.110	16.42-16.423	399.9-410	4.5-5.15
[1]0.495-0.505	16.69475-16.69525	608-614	5.35-5.46
2.1735-2.1905	16.80425-16.80475	960-1240	7.25-7.75
4.125-4.128	25.5-25.67	1300-1427	8.025-8.5
4.17725-4.17775	37.5-38.25	1435-1626.5	9.0-9.2
4.20725-4.20775	73-74.6	1645.5-1646.5	9.3-9.5
6.215-6.218	74.8-75.2	1660-1710	10.6-12.7
6.26775-6.26825	108-121.94	1718.8-1722.2	13.25-13.4
6.31175-6.31225	123-138	2200-2300	14.47-14.5
8.291-8.294	149.9-150.05	2310-2390	15.35-16.2
8.362-8.366	156.52475-156.52525	2483.5-2500	17.7-21.4
8.37625-8.38675	156.7-156.9	2690-2900	22.01-23.12
8.41425-8.41475	162.0125-167.17	3260-3267	23.6-24.0
12.29-12.293	167.72-173.2	3332-3339	31.2-31.8
12.51975-12.52025	240-285	3345.8-3358	36.43-36.5
12.57675-12.57725	322-335.4	3600-4400	([2])
13.36-13.41			

Limits Of Radiated Emission Measurement (Above 1000MHz)

Frequency (MHz)	Limit (dBuV/m) (at 3M)	
	Peak	Average
Above 1000	74	54

Notes:
(1)The limit for radiated test was performed according to FCC PART 15C.
(2)The tighter limit applies at the band edges.
(3) Emission level (dBuV/m)=20log Emission level (uV/m).

8.3 Test Procedure

Receiver Parameter	Setting
Attenuation	Auto
Start Frequency	2300MHz
Stop Frequency	2520
RB / VB (emission in restricted band)	1 MHz / 1 MHz for Peak, 1 MHz / 10Hz for Average

Above 1GHz test procedure as below:

a.The EUT was placed on the top of a rotating table 1.5 meters above the ground at a 3 meter camber. The table was rotated 360 degrees to determine the position of the highest radiation.

b.The EUT was set 3 meters away from the interference-receiving antenna, which was mounted on the top of a variable-height antenna tower.

c.The antenna height is varied from one meter to four meters above the ground to determine the maximum value of the field strength. Both horizontal and vertical polarizations of the antenna are set to make the measurement.

d.For each suspected emission, the EUT was arranged to its worst case and then the antenna was tuned to heights from 1 meter to 4 meters and the rota table was turned from 0 degrees to 360 degrees to find the maximum reading.

e.The test-receiver system was set to Peak Detect Function and Specified Bandwidth with Maximum Hold Mode.

f. If the emission level of the EUT in peak mode was 10dB lower than the limit specified, then testing could be stopped and the peak values of the EUT would be reported. Otherwise the emissions that did not have 10dB margin would be re-tested one by one using peak, quasi-peak or average method as specified and then reported in a data sheet.

g. Test the EUT in the lowest channel, the middlest channel, the Highest channel.

Note:

Both horizontal and vertical antenna polarities were tested and performed pretest to three orthogonal axis. The worst case emissions were reported.

8.4 EUT Operating Conditions

The EUT was configured for testing in a typical fashion (as a customer would normally use it). The EUT has been programmed to continuously transmit during test. This operating condition was tested and used to collect the included data.

8.5 Test Result

	Polar (H/V)	Frequency (MHz)	Reading Level (dBuV/m)	Correct Factor (dB)	Measure-ment (dBuV/m)	Limits (dBuV/m)		Result
					PK	PK	AV	
GFSK	Low Channel							
	H	2390.00	52.85	-19.46	33.39	74.00	54.00	PASS
	H	2400.00	57.21	-19.42	37.79	74.00	54.00	PASS
	V	2390.00	52.86	-19.46	33.40	74.00	54.00	PASS
	V	2400.00	53.77	-19.42	34.35	74.00	54.00	PASS
	High Channel							
	H	2483.50	52.91	-19.05	33.86	74.00	54.00	PASS
	H	2500.00	49.34	-18.98	30.36	74.00	54.00	PASS
	V	2483.50	51.20	-19.05	32.15	74.00	54.00	PASS
	V	2500.00	47.10	-18.95	28.15	74.00	54.00	PASS

Remark:

1. Emission Level = Meter Reading + Factor,

Factor = Antenna Factor + Cable Loss – Pre-amplifier.

Over= Emission Level - Limit

2. If the PK measured levels comply with average limit, then the average level were deemed to comply with average limit.

3 In restricted bands of operation, The spurious emissions below the permissible value more than 20dB

4. The amplitude of spurious emissions which are attenuated by more than 20dB below the permissible value has no need to be reported.

9. Power Spectral Density Test

9.1 Block Diagram Of Test Setup

9.2 Limit

FCC Part15 (15.247), Subpart C				
Section	**Test Item**	**Limit**	**Frequency Range (MHz)**	**Result**
15.247	Power Spectral Density	8 dBm (in any 3KHz)	2400-2483.5	PASS

Limits Of Radiated Emission Measurement (Above 1000MHz)

9.3 Test procedure

1. Set analyzer center frequency to DTS channel center frequency.
2. Set the span to 1.5 times the DTS bandwidth.
3. Set the RBW to: 3 kHz
4. Set the VBW ≥ 3 x RBW.
5. Detector = peak.
6. Sweep time = auto couple.
7. Trace mode = max hold.
8. Allow trace to fully stabilize.
9. Use the peak marker function to determine the maximum amplitude level within the RBW.
10. If measured value exceeds limit, reduce RBW (no less than 3 kHz) and repeat.

9.4 EUT Operating Conditions

The EUT tested system was configured as the statements of 4.6 Unless otherwise a special operating condition is specified in the follows during the testing.
Note: Power Spectral Density(dBm)=Reading+Cable Loss

9.5 Test Result

Temperature:	26 ℃	Relative Humidity:	54%
Pressure:	101KPa	Test Voltage :	DC 3V

Frequency	Power Spectral Density(dBm/3kHz)	Limit (dBm/3kHz)	Result
2410 MHz	-15.542	8	PASS
2445 MHz	-15.881	8	PASS
2473 MHz	-15.916	8	PASS

Low channel

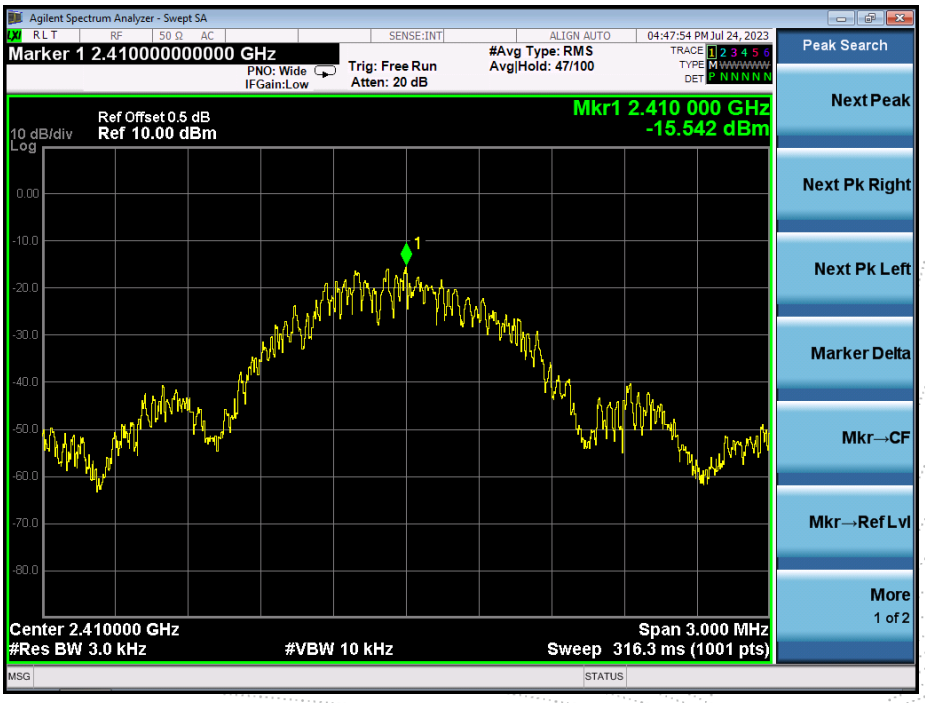

Middle channel

High channel

10. Bandwidth Test

10.1 Block Diagram Of Test Setup

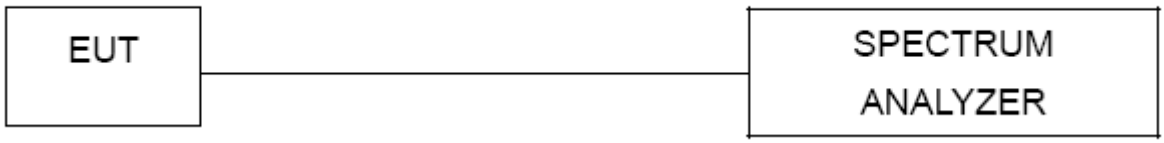

10.2 Limit

FCC Part15 (15.247) , Subpart C				
Section	Test Item	Limit	Frequency Range (MHz)	Result
15.247(a)(2)	Bandwidth	>= 500KHz (-6dB bandwidth)	2400-2483.5	PASS

10.3 Test procedure

1. Set RBW = 100 kHz.
2. Set the video bandwidth (VBW) ≥ 3 x RBW.
3. Detector = Peak.
4. Trace mode = max hold.
5. Sweep = auto couple.
6. Allow the trace to stabilize.
7. Measure the maximum width of the emission that is constrained by the frequencies associated with the two outermost amplitude points (upper and lower frequencies) that are attenuated by 6 dB relative to the maximum level measured in the fundamental emission.

10.4 EUT operating Conditions

The EUT tested system was configured as the statements of 4.6 Unless otherwise a special operating condition is specified in the follows during the testing.

Note: Power Spectral Density(dBm)=Reading+Cable Loss

10.5 Test Result

Temperature:	26 ℃	Relative Humidity:	54%
Pressure:	101KPa	Test Voltage :	DC 3V

Frequency (MHz)	-6dB bandwidth (MHz)	Limit (kHz)	Result
2410 MHz	0.710	500	Pass
2445 MHz	0.740	500	Pass
2473 MHz	0.751	500	Pass

Low channel

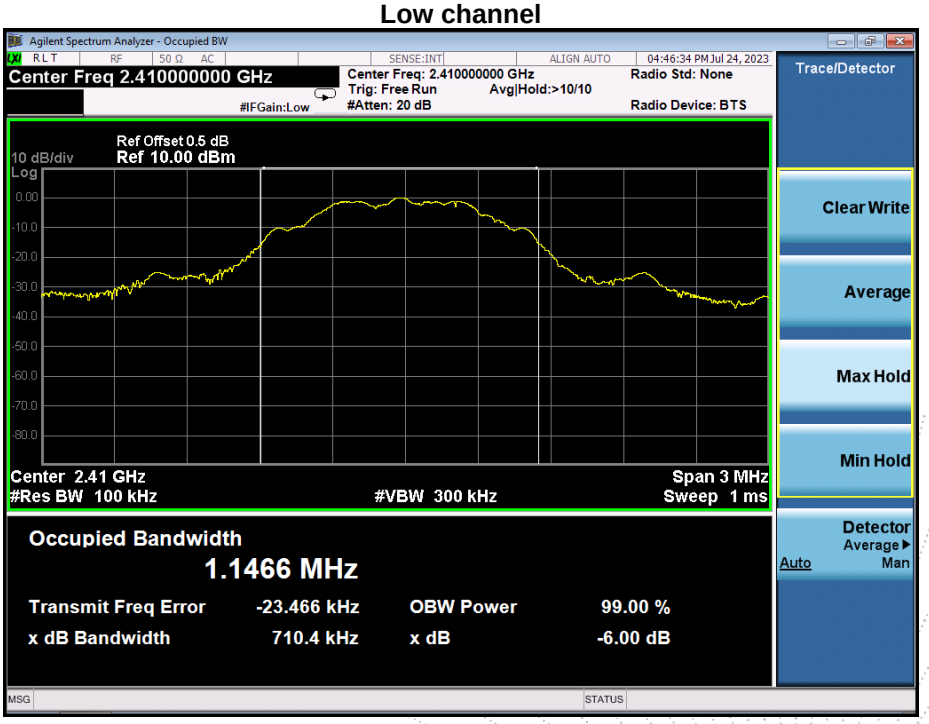

Middle channel

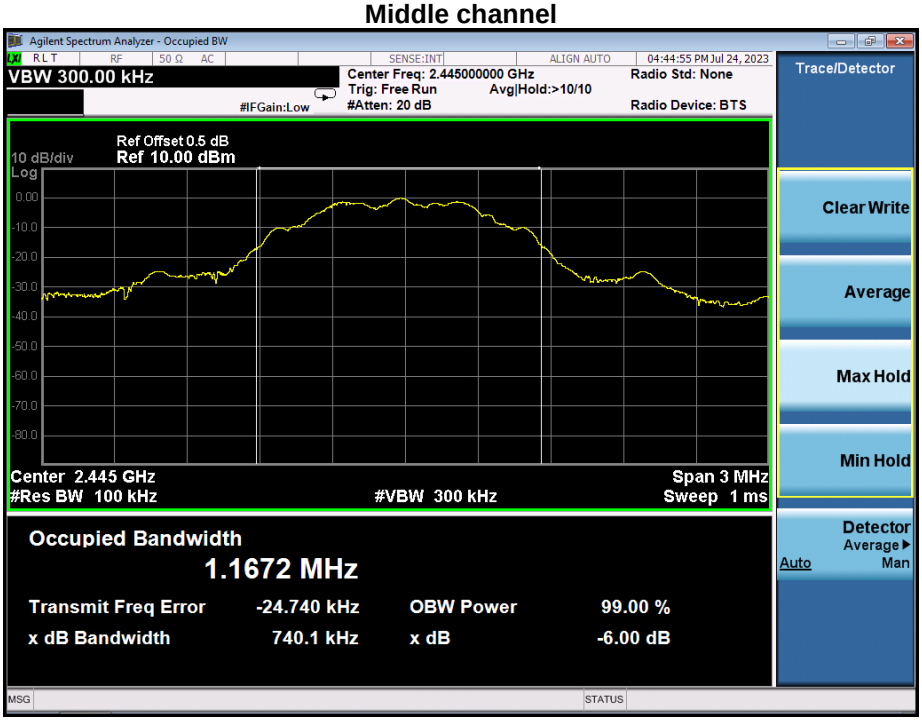

High channel

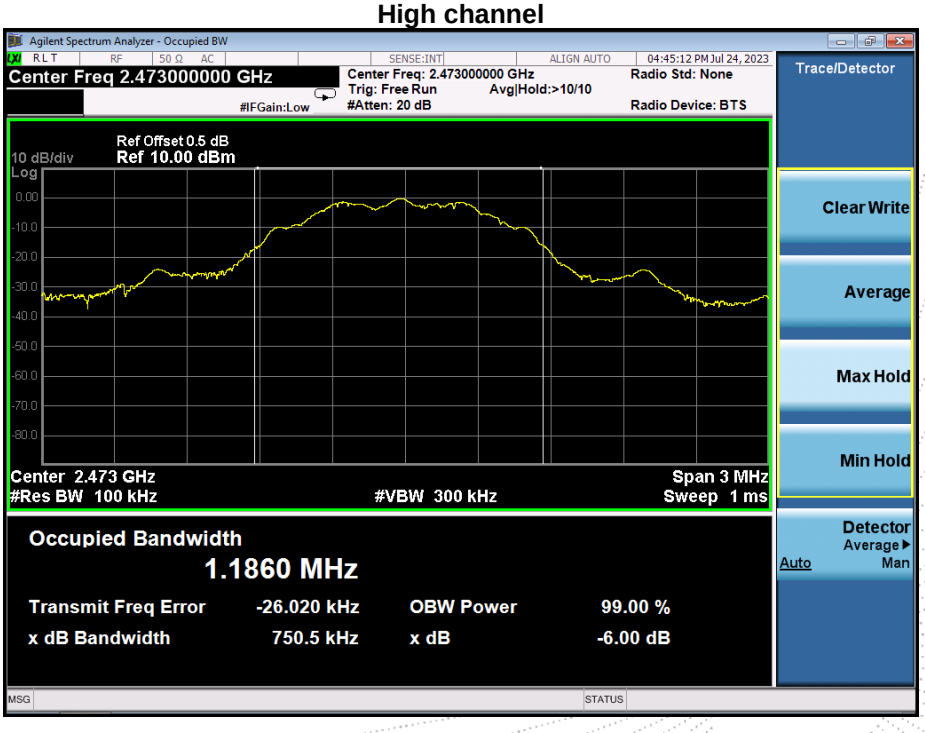

11. Peak Output Power Test

11.1 Block Diagram Of Test Setup

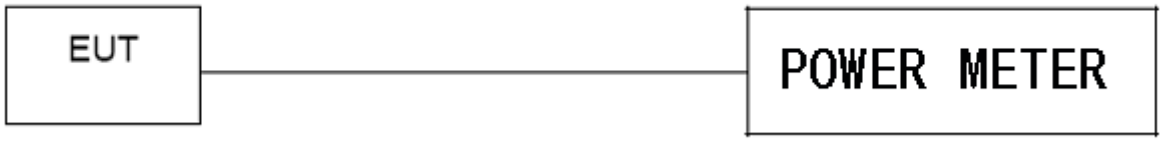

11.2 Limit

FCC Part15 (15.247) , Subpart C				
Section	Test Item	Limit	Frequency Range (MHz)	Result
15.247(b)(3)	Peak Output Power	1 watt or 30dBm	2400-2483.5	PASS

11.3 Test Procedure

a. The EUT was directly connected to the Power meter

11.4 EUT Operating Conditions

The EUT tested system was configured as the statements of 4.6 Unless otherwise a special operating condition is specified in the follows during the testing.

Note: Power Spectral Density(dBm)=Reading+Cable Loss

11.5 Test Result

Temperature:	26 ℃	Relative Humidity:	54%
Pressure:	101KPa	Test Voltage :	DC 3V

	Frequency	Maximum Conducted Output Power(PK) (dBm)	Conducted Output Power Limit(dBm)
GFSK	2410 MHz	0.727	30
	2445 MHz	0.714	30
	2473 MHz	0.613	30

12. 100 kHz Bandwidth Of Frequency Band Edge

12.1 Block Diagram Of Test Setup

12.2 Limit

In any 100 kHz bandwidth outside the frequency band in which the spread spectrum intentional radiator is operating, the radio frequency power that is produced by the intentional radiator shall be at least 20 dB below that in the 100 kHz bandwidth within the band that contains the highest level of the desired power, based on either an RF conducted or a radiated measurement.

12.3 Test procedure

Using the following spectrum analyzer setting:

a) Set the RBW = 100KHz.

b) Set the VBW = 300KHz.

c) Sweep time = auto couple.

d) Detector function = peak.

e) Trace mode = max hold.

f) Allow trace to fully stabilize.

12.4 EUT operating Conditions

The EUT tested system was configured as the statements of 4.6 Unless otherwise a special operating condition is specified in the follows during the testing.

Note: Power Spectral Density(dBm)=Reading+Cable Loss

12.5 Test Result

Temperature:	26 ℃	Relative Humidity:	54%
Pressure:	101KPa	Test Voltage :	DC 3V

GFSK: Band Edge, Left Side

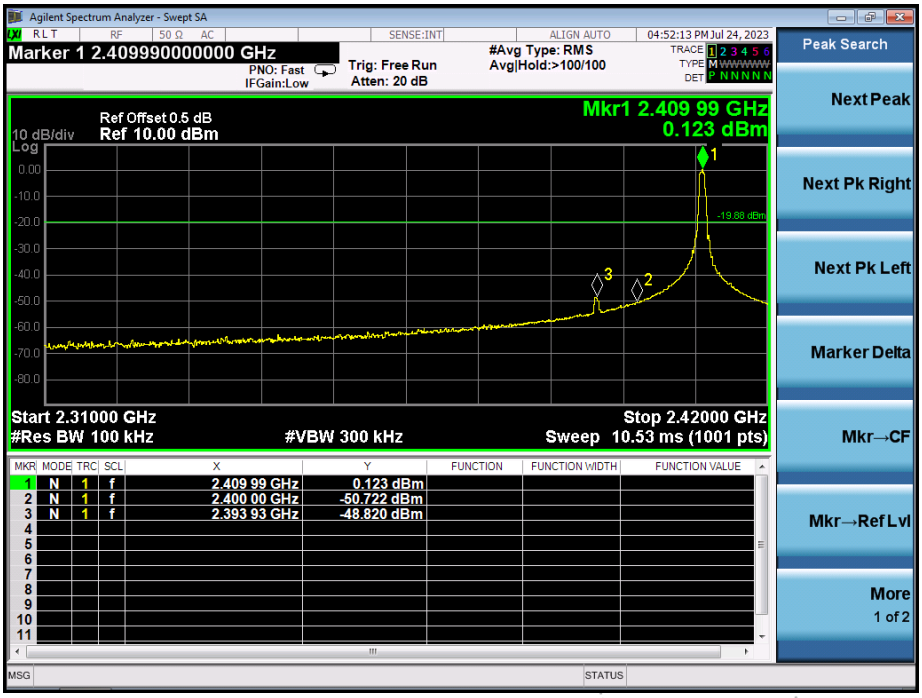

GFSK: Band Edge, Right Side

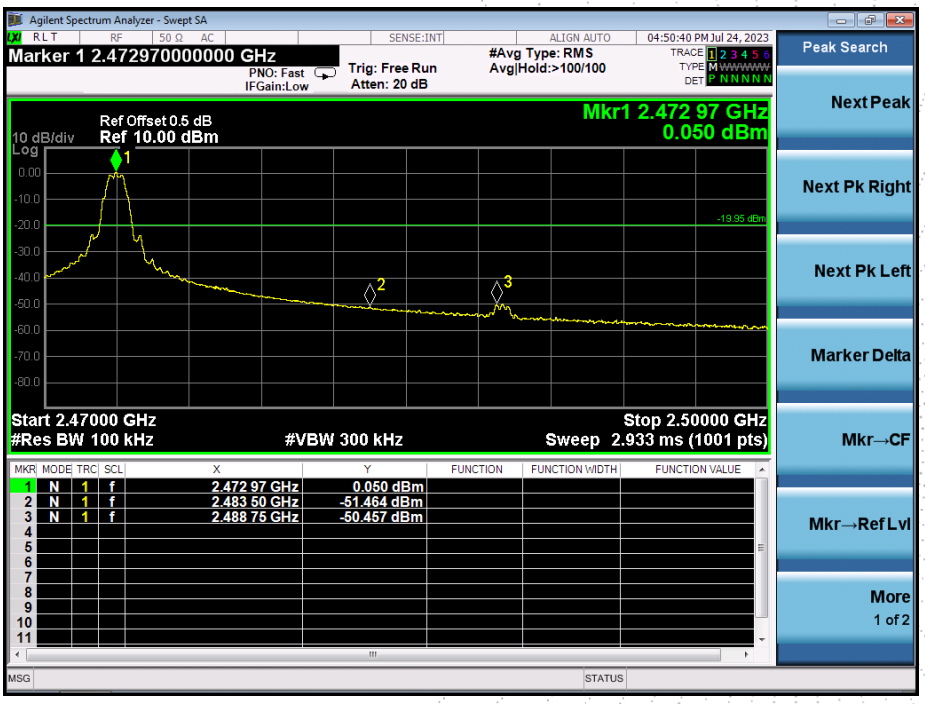

Conducted Emission Measurement
GFSK

Low Channel 2403MHz

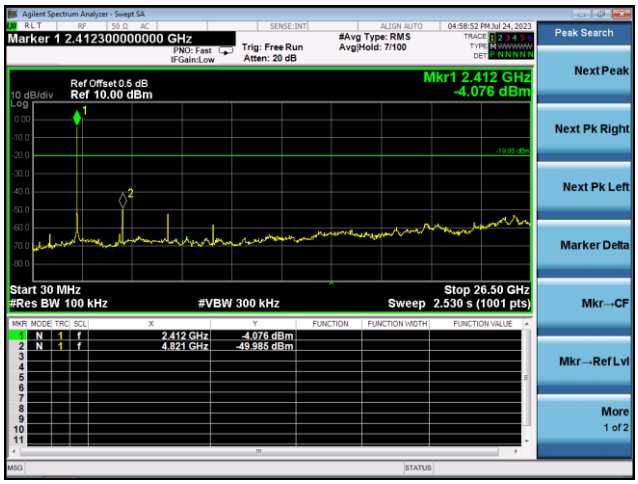

Middle Channel 2442MHz

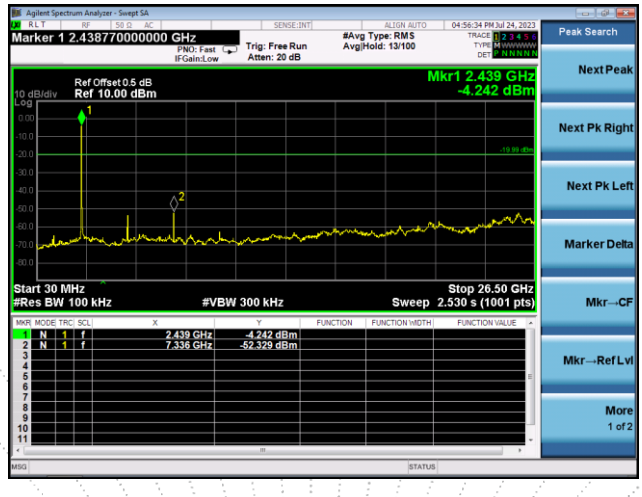

High Channel 2480MHz

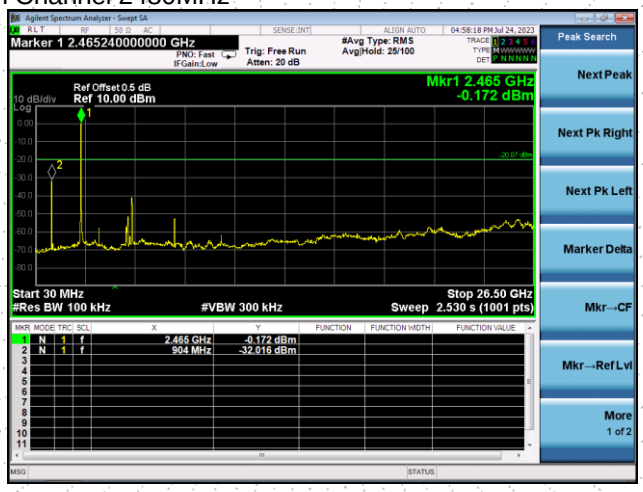

13. Antenna Requirement

13.1 Limit

15.203 requirement: For intentional device, according to 15.203: an intentional radiator shall be designed to ensure that no antenna other than that furnished by the responsible party shall be used with the device.

13.2 Test Result

The EUT antenna is Wire antenna, fulfill the requirement of this section.

14. EUT Photographs

EUT Photo

NOTE: Appendix-Photographs Of EUT Constructional Details

15. EUT Test Setup Photographs

Radiated Measurement Photos

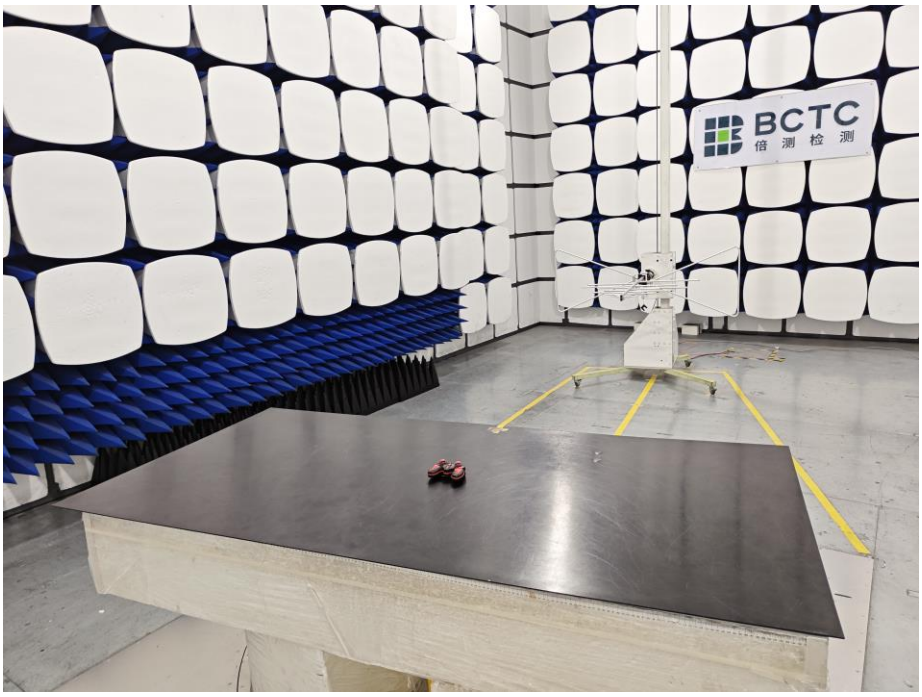

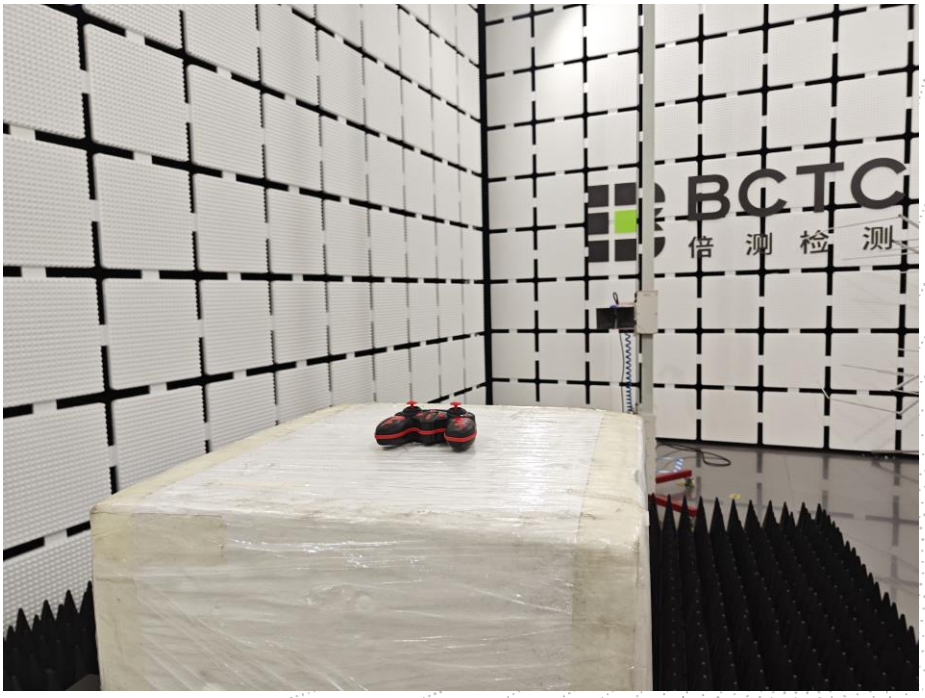

STATEMENT

1. The equipment lists are traceable to the national reference standards.

2. The test report can not be partially copied unless prior written approval is issued from our lab.

3. The test report is invalid without the "special seal for inspection and testing".

4. The test report is invalid without the signature of the approver.

5. The test process and test result is only related to the Unit Under Test.

6. Sample information is provided by the client and the laboratory is not responsible for its authenticity.

7. The quality system of our laboratory is in accordance with ISO/IEC17025.

8. If there is any objection to this test report, the client should inform issuing laboratory within 15 days from the date of receiving test report.

Address:
1-2/F., Building B, Pengzhou Industrial Park, No.158, Fuyuan 1st Road, Zhancheng, Fuhai Subdistrict, Bao'an District, Shenzhen, Guangdong, China

TEL：400-788-9558

P.C.: 518103

FAX：0755-33229357

Website：http://www.chnbctc.com

E-Mail：bctc@bctc-lab.com.cn

※※※※※ **END** ※※※※※