Email: support@sgproaudio.com

SGPRO®

Model:V2

USER MANUAL

Digital Saxophone Wireless Microphone

Please read this manual carefully before use.

WARNING

ANNOUNCMENTS

- Do place receiver in open space, so that it can receive signal better;
- Do not throw the device;
- Do not place the device under rain or drop it into the water;
- Keep the device away from sunshine or electromagnetic field;
- Do insert batteries in the right way, and remove them if device is idle for a long time;
- Cut off the power supply before battery replacement;
- Pull out power adaptor from the power supply if the receiver is idle for long time;
- Do not take apart device without permission, in case users are injured;
- The Device doesn't contain any part for self refitting, otherwise, the warranty will be void;
- Use a soft cloth to clean the device, if there's any stubborn stain, clean it with neutral detergent but not volatile gasoline or thinner;
- Keep at least 30CM space around device for better ventilating;
- Do not cover ventilation hole with paper, tablecloth or curtain;
- Do not put fire on the device like burning candle;
- Keep device the away from water drops, or any liquid container such a vase;
- Do not use new and old batteries at the same time, besides, replace them with the same kind of batteries; Discarding batteries to specific recycling bin;
- Working temperature: 5℃- 60℃;

- Please try the below methods to solve interfered problem when using wireless microphones
- Adjust place or direction of the antenna;
- Keep away from radio or TV;
- Do not plug in same electrical socket outlet with radio or TV;
- The best angle is 45℃ for mouth and microphone when speech, in order to reduce affected by airflow from the mouth;
- Using 1 microphone when 1 sound input, otherwise sound will be mixed;
- Keep a distance of mouth and microphone less than 15CM because of cardioid pickup, otherwise bass is not good;

COPYRIGHT:
All Right Reserved.

CONTENTS

Brief Introduction..... 2
Main Features..... 2
Parts (Receiver)..... 3
Receiver screen.....4
Handheld Mic Operation 7
Saxophone Mic operation..... 9
Bodypack Operation..... 10
Receiver operation.....10
Technique Specification.....12
Warning 14

REMINDER

Please do read this manual carefully before using this product. Wireless microphones can scatter radio energy, please do follow the instruction to install and operate in case causing harmful influence. Do abide local radio regulations when using wireless microphones. We can offers you frequency of 902-928MHz products, and please choose specific range according to the local radio regulations; otherwise, you will take full responsibility of all consequences.

I.BRIEF INTRODUCTION

Wireless microphone system is very easy to install and convenient to use, the first choice for singers. This model adopts intelligent cryptographic hardware, to achieve unique sound and RF performance. Frequencies group, colorful TFT display, and humanized menu make it easy for single or multi-sets installation.

II.MAIN FEATURES

- Optional UHF band 902-928MHz
- Unique digital 16 bit ID pilot technology, no crosstalk disturbance even in same frequency;
- Ultra- short audio latency
- Audio sampling mode: 48K
- Frequency response: 30-20KHz
- The receiver use a colorful TFT display and menu settings
- Auto frequency scanning and frequency spectrum display
- Built-in 12 band EQ & ECHO function
- Built-in HI / LO transmitter power
- Ideal distance reach 262 feet (80 meters)

SAXOPHONE TRANSMITTER

- Carrier Frequency: UHF902-928MHz, optional
- Bandwidth: 26MHz
- Frequency Switch: IR SYNC
- Output Power: 10mW
- Harmonic Radiation: <-50 dBc
- Battery: Built-in lithium battery
- Battery Life: >3h

- Warnings of Receiver installation
- Beyond 1 meter more away from the wall
- Beyond 1 meter more away from the floor
- Antenna fully pull out, or will effect receiving signal

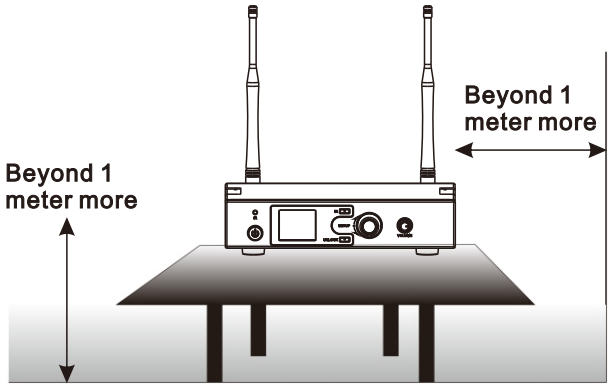

- See below RECHARGEABLE picture, use charge cable to connect (17) and saxophone transmitter's rechargeable port to recharge. When fully charged it will be cut off automaticaly

Rechargeable Operation

If use extra charger to recharge, Max can't more than 5V 2A

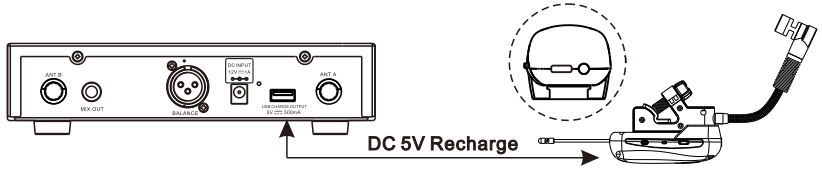

VIII. TECHNICAL SPECIFICATION

RECEIVER

- Carrier Frequency: UHF 902-928MHz
- Bandwidth: 26MHz
- Channel Bandwidth: 300KHz
- Dynamic Range: 96dB
- Distortion: <0.1%
- Frequency Response: 30-20KHz/±2dB
- Signal/ Noise Ratio: 96dB
- Receiving Sensitivity: <3ms
- Power Supply: DC12 1A
- Audio Output: 1x 6.3mm, 1x XLR balance output

III.PARTS(RECEIVER)

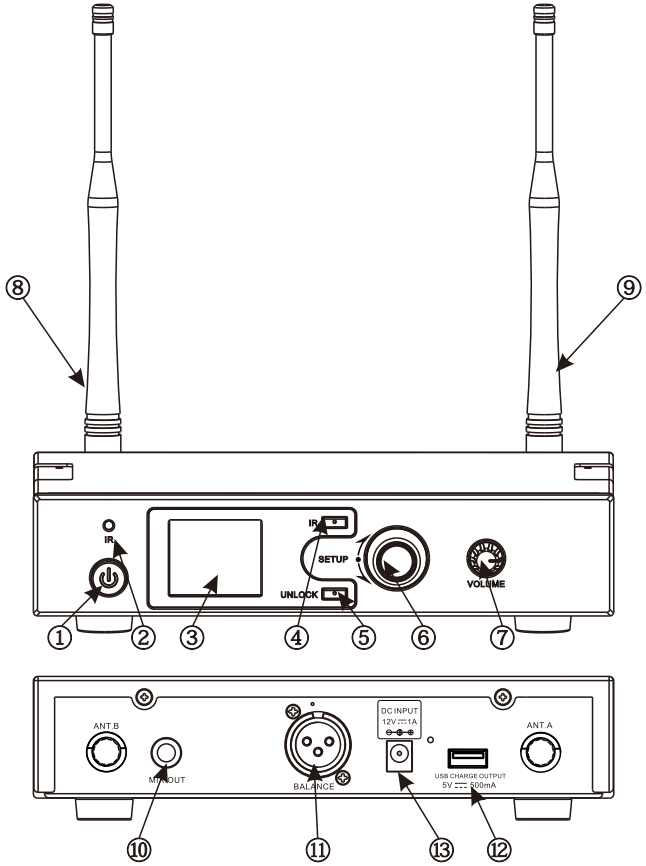

1. POWER
2. IR
3. TFT WINDOW
4. IR
5. UNLOCK
6. SETUP
7. VOLUME
8. ANTENNA-A
9. ANTENNA-B
10. MIX. OUT
11. BALANCE
12. USB CHARGE OUTPUT
13. DC INPUT

V. RECEIVER SCREEN

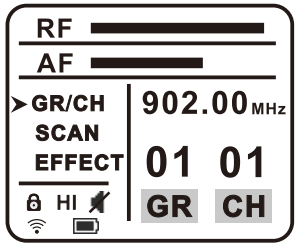

RF
AF

RF: Indicate signal intensity, the longer length of the color, the stronger signal.

AF: Indicate audio level, the longer length of the color, the stronger signal.

GR/CH: GR: Group: Indicate the current frequency group.
CH: Channel: Indicate the current frequency channel.

SCAN: Auto scan. Automatically scan up or down to search for available frequency until the desired frequency is reached can be set under SCAN function.

EFFECT: Audio Effect Setting menu and condition.

LOCK: Receiver in LOCK status.

MUTE: Receiver in MUTE status.

IR ICON: When flashing indicates now is sending SYNC signal.

Battery:Indicate the handheld microphone battery status.

- Balance output: connect the audio cable(attached) to the MIX. OUT socket (11) while the other side connects to MIX. IN or AUX. In socket of the audio mixer or power amplifier.
- Connect the USB charge cable
  Connect the charging cable (attached) to USB socket (12) while the other end side connect to the saxophone microphone
- Turn on the power button (1) , TFT screen (3) is lighting,
  the receiver is in working statue.
  Note: Before turn on the receiver, turn the volume control knob (7) to the minimum volume, adjust the volume as needed when the receiver is working.
- Select function by adjusting the SETUP knob (6) (Function details refer to the instruction of receiver TFT LCD display function)
- See below IR SYNC picture, long press IR button under unlock status, receiver start sending the signal, automatically turn to work after completion.

SNYC Operation

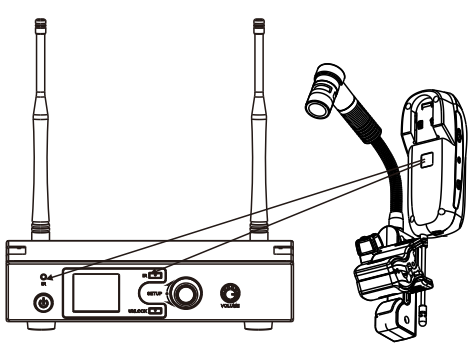

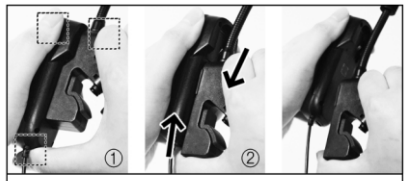

Note! The transmitter's IR WINDOW is hidden, you need to remove the mic head from the transmitter as above pictures operation.

1.Hold the mic with its antenna facing downward
2.Hold the transmitter upward and pull off the mic

SNYC IR operation shows as above picture. Boot up the receiver, and then long-press IR BUTTON for 3 seconds till the IR indicator light flashing and transmit IR signal, meanwhile, boot up microphone and keep saxophone's IR window close to the receiver's IR window. Then receiver's IR light stop flashing after SYNC successfully, and the RF signal will show on the receiver.

VII.BODYPACK OPERATION

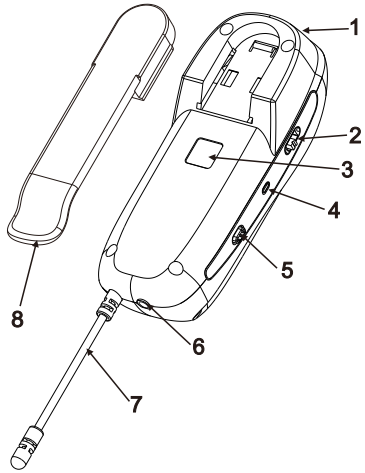

1. Audio input
2. attenuation switch
3. IR window
4. Indicator light
5. Power switch
6. Rechargeable port
7. Antenna
8. Bodypack clip

▸ **AUDIO INPUT**

Support to connect external wired microphone or sound source equipment. For example, lapel mic, headset mic, MP3, mobile phone and so on.

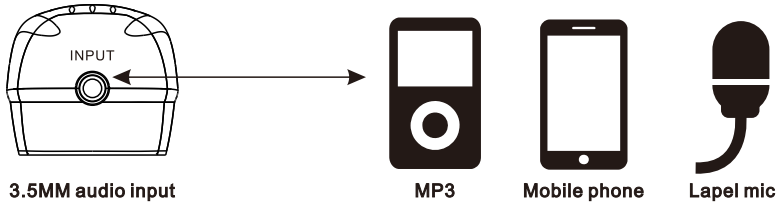

VIII. RECEIVER OPERATION

- Pull out the antennas(8) (9) and keep their angle 90° with receiver.
- Power supply connection:
  Connect power supply with DC input(13), make sure local power supply matches the item needed.
- Audio output connection:
  MIX output: connect one end of the attached audio cable into OUT. MIX port (10), meanwhile connect the other end into MIX IN or AUX IN port of mixer or speaker.

Display function operation

When the receiver working, long press UNLOCK to unlocked the system before setting. The initial setup from channel adjustment, below is the operation of the product.

Note: the below setting is under unlock status, long press UNLOCK before setting.

● Channel setting mode

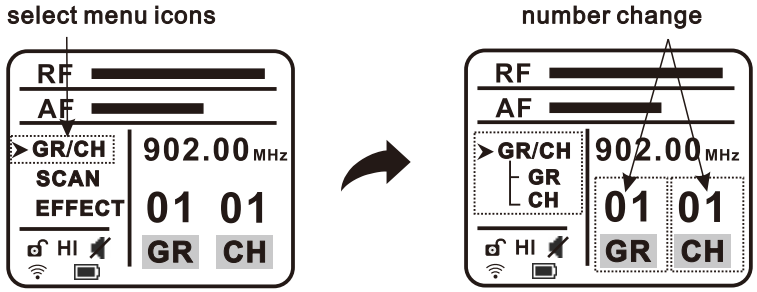

● Scan available channels mode

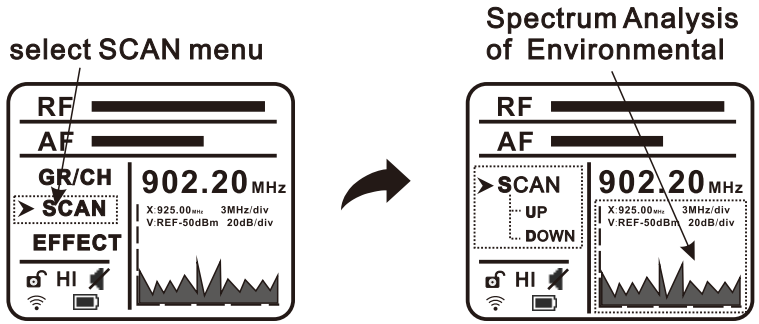

●EFFECT SETTING

Select EFFECT menu

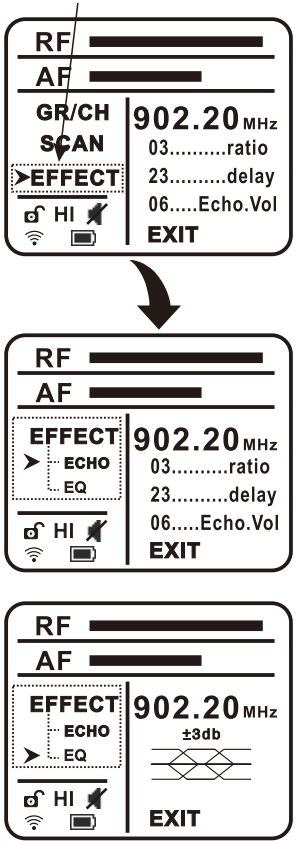

ECHO 03.....ratio 23.....delay 06..Echo.Vol	Ratio: Echo proportion
	Delay: Delay level
	Echo.vol: Echo volume

EQ ±3db ±6db	Bass Increase
	Bass Decay
	Medium Increase
	Medium Decay
	Tremble Increase
	Tremble Decay
	By Pass
EXIT	EXIT

VI. SAXOPHONE WIRELESS TRANSMITTER

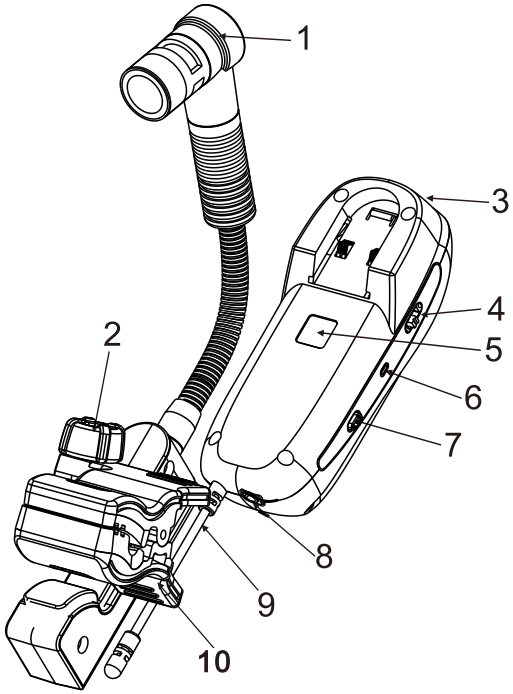

1. Capsule
2. Nail
3. Audio input
4. attenuation switch
5. IR window
6. Indicator light
7. Power switch
8. Recharge port
9. Antenna
10. Saxophone Clamp

FCC Warnning:

This equipment has been tested and found to comply with the limits for a Class B digital device, pursuant to part 15 of the FCC Rules. These limits are designed to provide reasonable protection againstharmful interference in a residential installation. This equipment generates, uses and can radiateradio frequency energy and, if not installed and used in accordance with the instructions, maycause harmful interference to radio communications. However, there is no guarantee thatinterference will not occur in a particular installation. If this equipment does cause harmfulinterference to radio or television reception, which can be determined by turning the equipmentoff and on, the user is encouraged to try to correct the interference by one or more of thefollowing measures:

- Reorient or relocate the receiving antenna.
- Increase the separation between the equipment and receiver.
- Connect the equipment into an outlet on a circuit different from that to which the receiver is connected.
- Consult the dealer or an experienced radio/TV technician for help.

Caution: Any changes or modifications to this device not explicitly approved by manufacturer could void your authority to operate this equipment.

This device complies with part 15 of the FCC Rules. Operation is subject to the following two conditions:

(1)This device may not cause harmful interference, and (2) this device must accept any interference received, including interference that may cause undesired operation.

This equipment complies with FCC radiation exposure limits set forth for an uncontrolled environment. This equipment should be installed and operated with minimum distance 0cm between the radiator and your body.