5) Click on "Adjust the Scanned Image Quality" on the bottom left corner of the above picture, the advanced properties interface will pop up, then users can set the scan; After finishing the settings, click on the "OK" button, then "Scan" button to start scan.

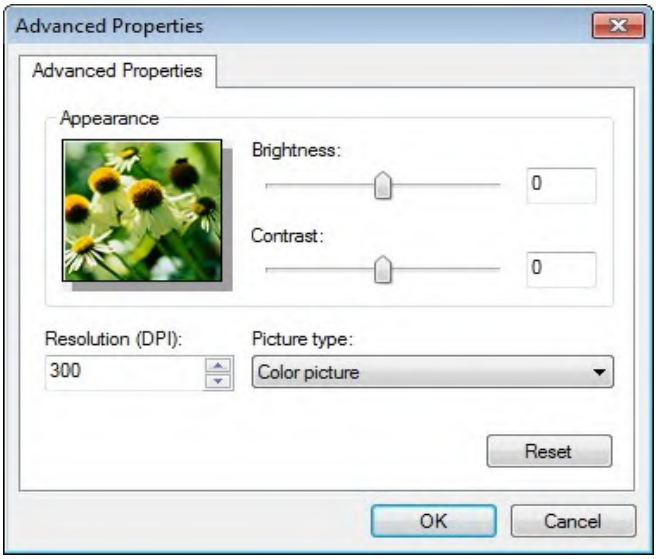

2. Photoshop

Operation Steps:

1) Launch Photoshop, click "File"- "Import" on the top left conrner and select WIA Scan, as is shown below:

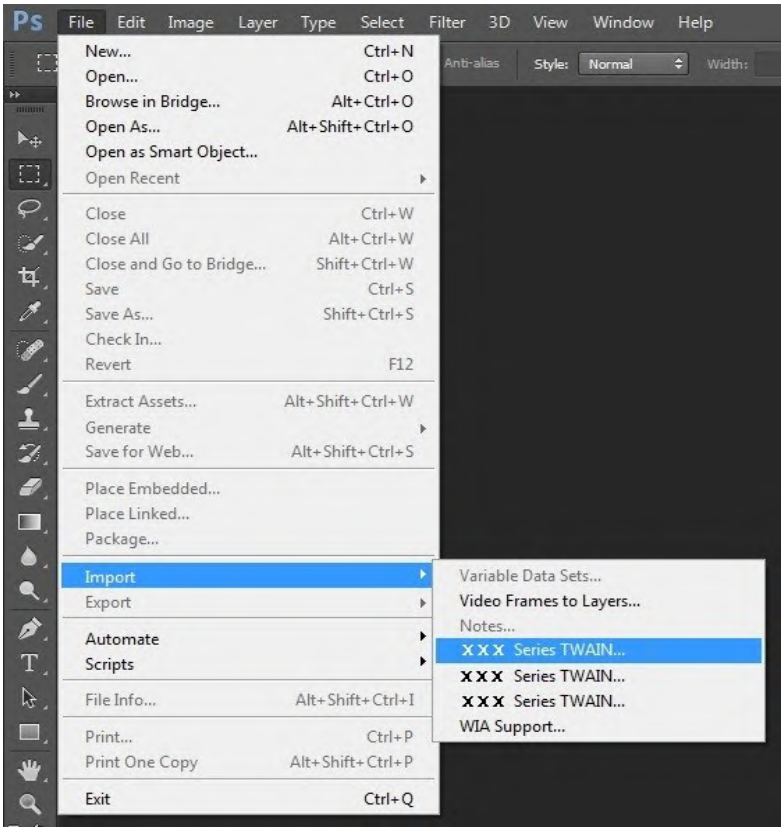

2) After the window pops up, please refer to Step 4 and Step 5 of 9.1.3.1 to see the specific operation steps.

9.1.3.2.WIA 2.0 Scan (Windows Vista / Windows Server 2008 and later versions)

Operation Steps:

1. Click on "Start"- "All Programs"- "Device and Printer" on the left bottom of the desktop.

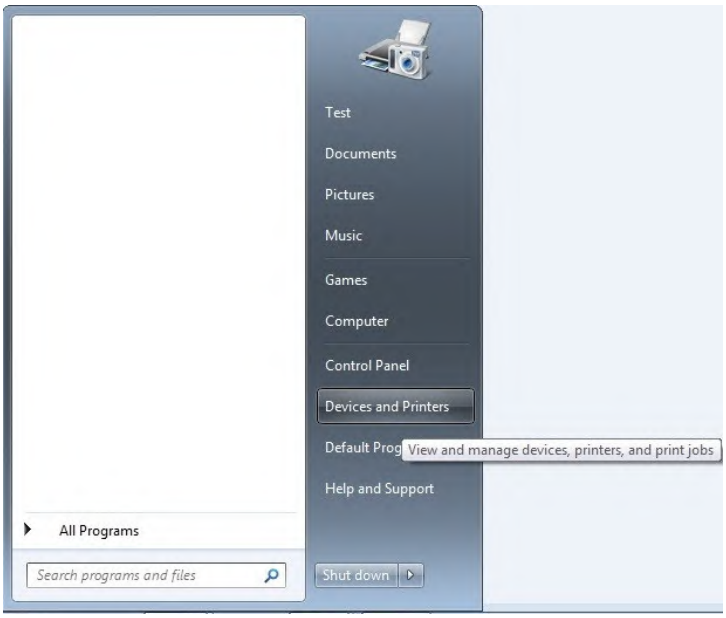

2. When the pop-up window appears, select the printer you want to use, and right click the mouse.

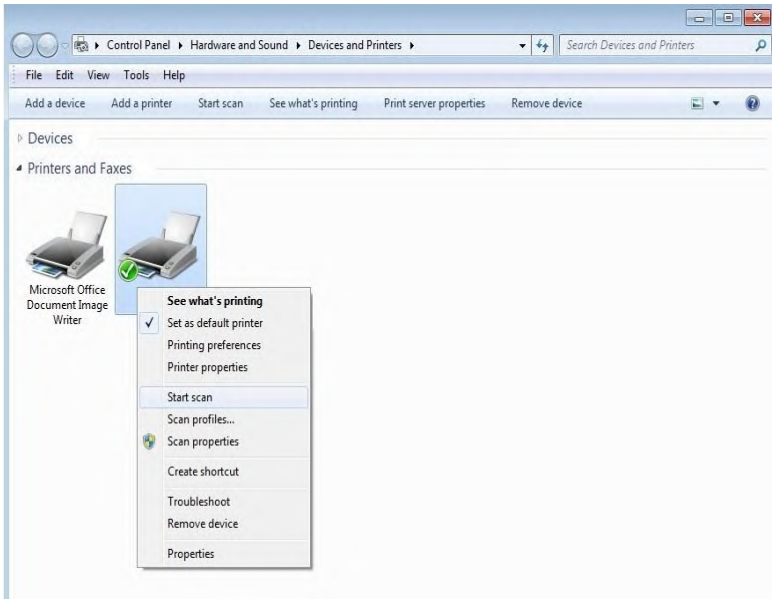

3. Click on "Start Scan" in the above option bar.

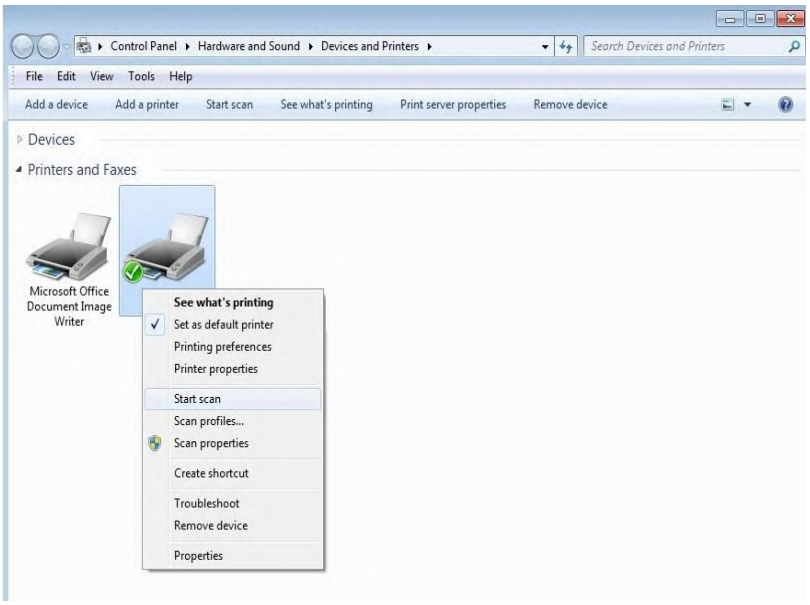

4. After the window pops up, set the scan and click "Scan" on the bottom right corner and start scan.

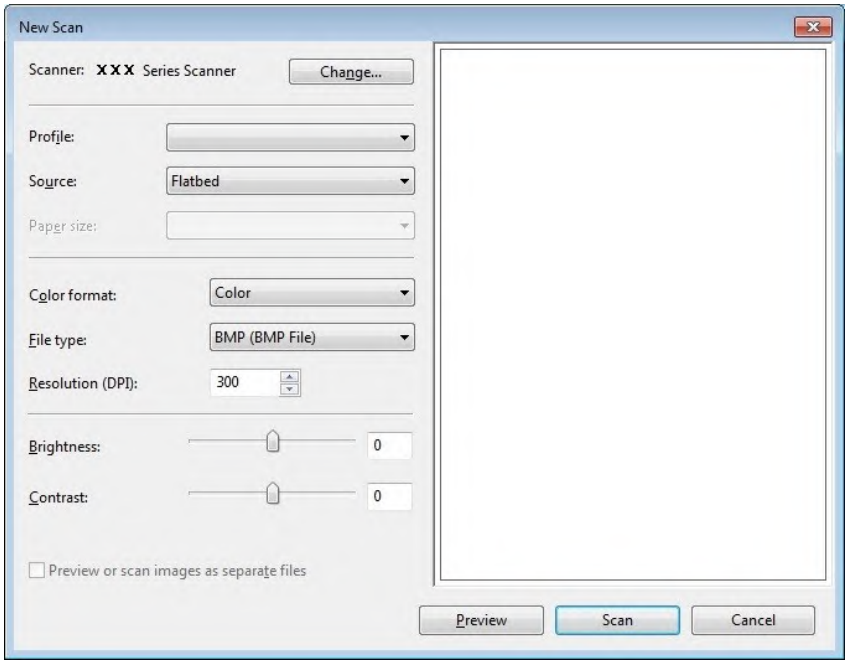

9.2. macOS System Scan

9.2.1. ICA Scan

9.2.1.1. Open ICA via "Print and Scan"

Operation Steps:

1. After installing the printer driver, click "System Preferences" icon on the bottom left corner of the computer desktop.

2. After the window pops up, click on "Print and Scan".

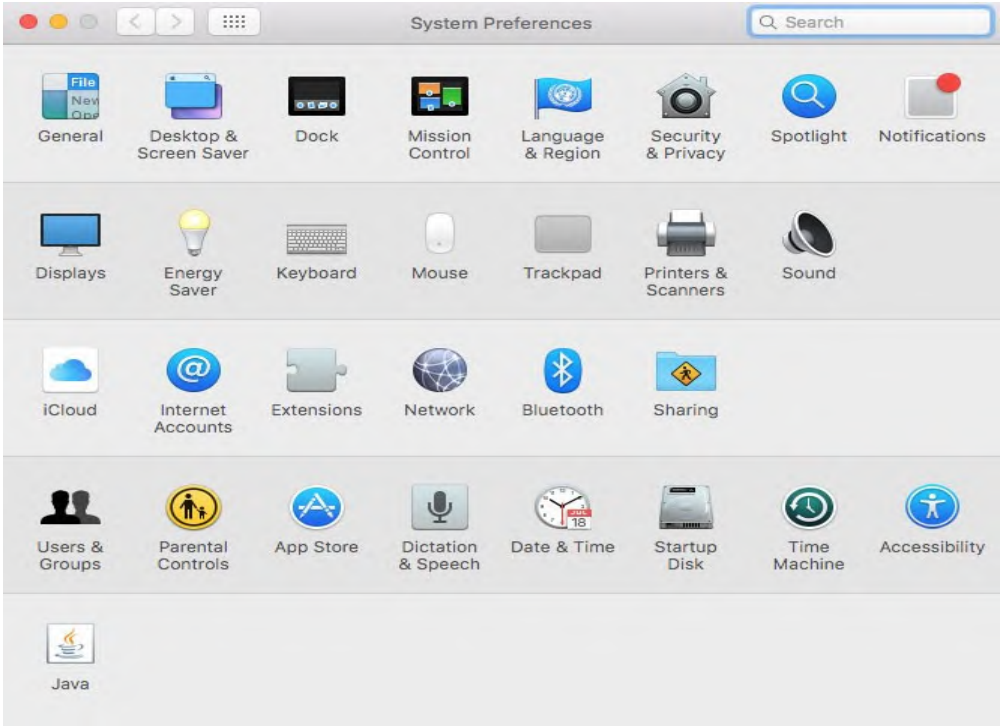

3. After the window pops up, click on "Scan".

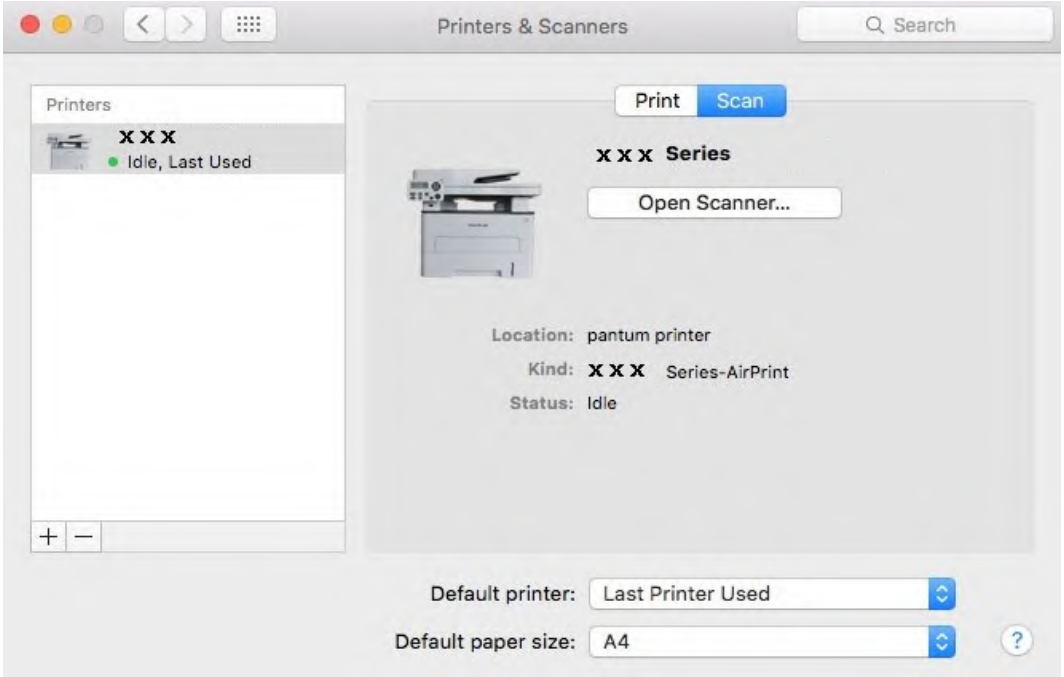

4. Click on "Open Scanner" and the scan window will pop up.

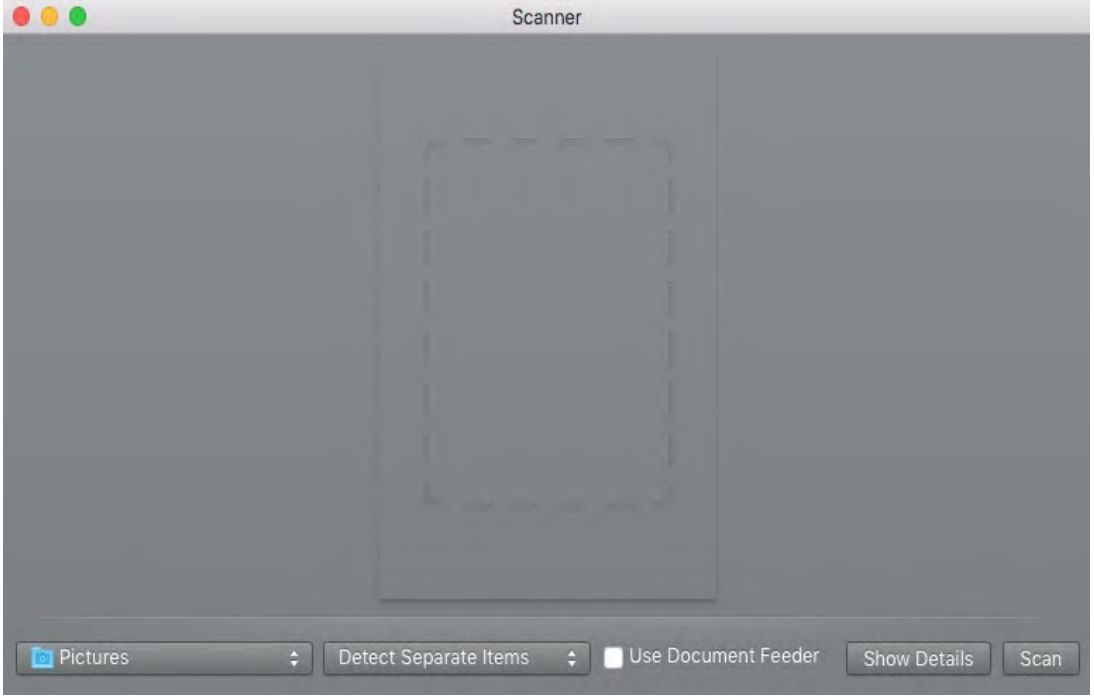

5. Click on "Show Details" on the bottom right corner to set the scan parameters.

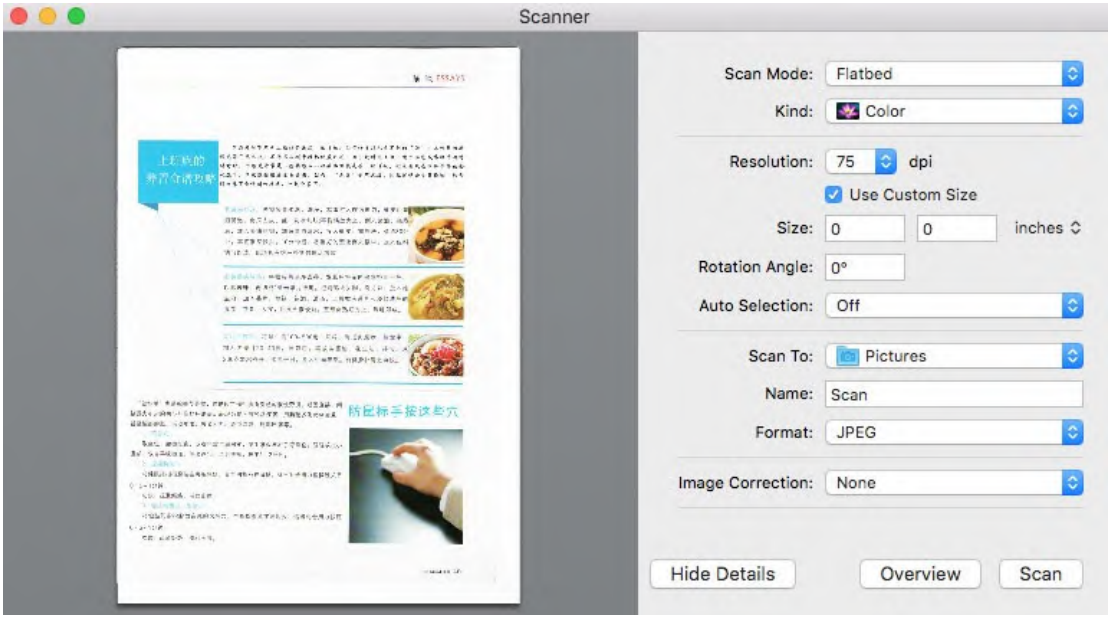

6. Click on "Scan" on the bottom right corner and start scan.

9.2.1.2. Call CIA through applications

Operation Steps:

1. Click on "Finder" icon on the bottom left corner of the computer desktop, or use keyboard shortcuts command+shift+C to open the window. Find "Image Capture" in "Applications" (or conduct keyboard shortcuts command+shift+A to directly switch to "Applications") and click to launch the application.

2. After selecting the printer in the left list, set the scan parameters in the right list. Click on "Scan" on the bottom right corner and start scan.

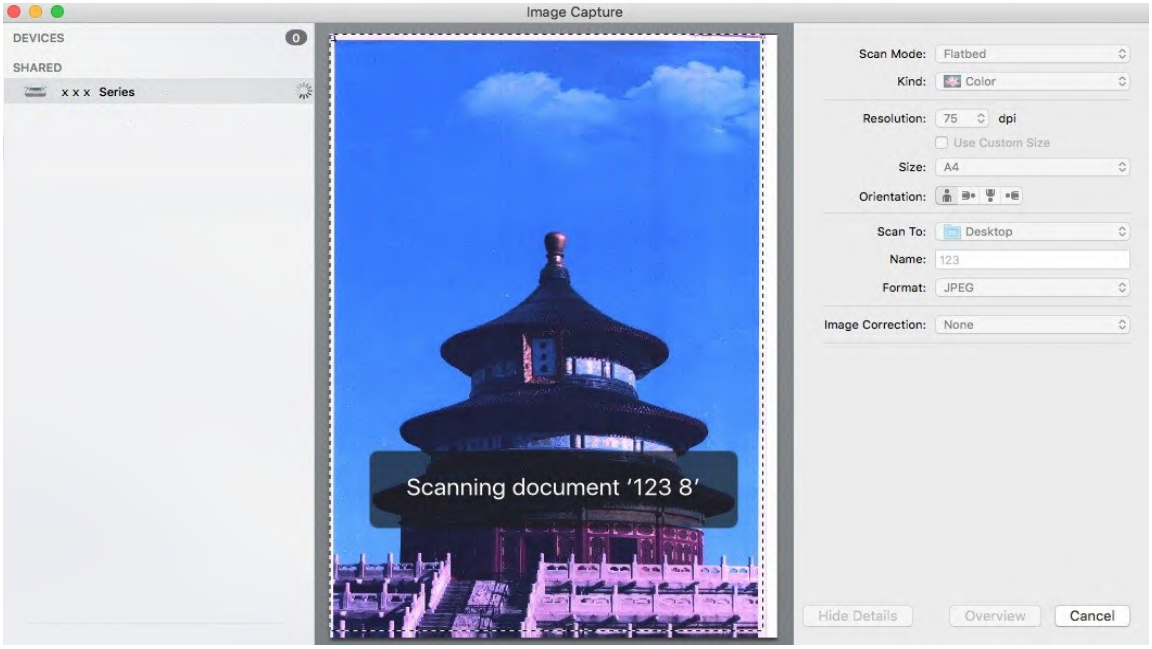

9.2.2. TWAIN Scan

Take Photoshop as an example.

Operation Steps:

1. Launch Photoshop, click on "File" – "Import" on the top left corner and select TWAIN Scan, as is shown below:

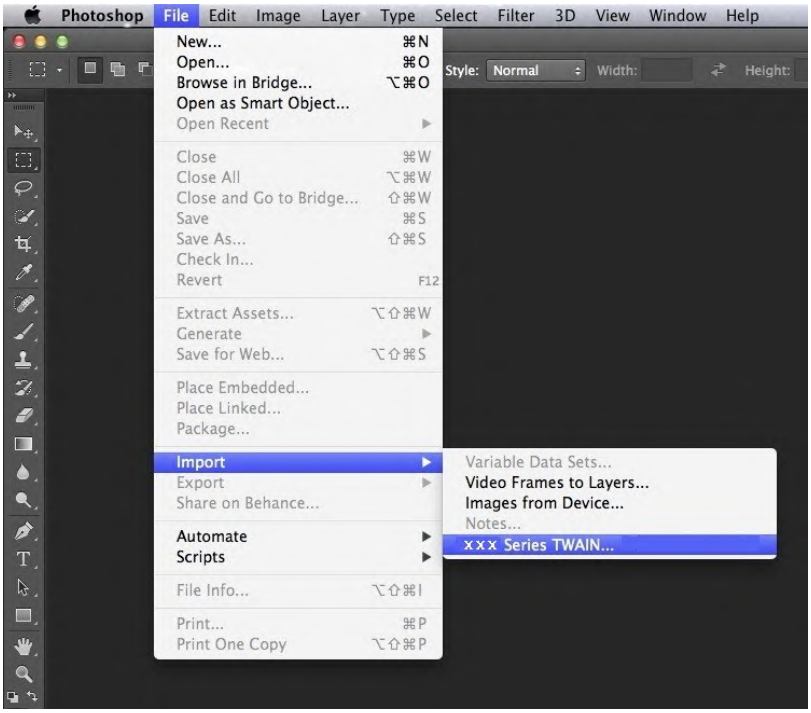

2. After the window pops up, please refer to Step 4 of 9.1.2.1 to see the specific operation steps.

9.3. Push Scan

This section is mainly to introduce how to scan files to PC, E-mail, FTP and USB with the printer's control panel.

Note: • The one-page file scanned to PC, E-mail or FTP could be saved in PDF, TIFF or JPEG; if scanned to USB, it could be saved in PDF and JPEG.

• Under merge scan mode, a file scanned to PC or USB will be saved in PDF be default; if scanned to E-mail or FTP, it will be saved in PDF, TIFF or JPEG.

9.3.1. Scan to PC

You may operate the printer's control panel to scan a file to PC. (Only support connection method of USB connection line.)

1. Be sure the printer and the computer are both switched on and connected with each other properly.

2. Put an original on the glass platen or into the ADF (please see Chapter 2.5 for how to put an original).

3. Press "Scan" and then "▲" or "▼" on control panel to select "One-page Scan" or "Merge Scan"; then, press OK.

4. Press "Menu" and then "OK" to enter the "Scan Setting" interface.

5. Press "▲" or "▼" to select "Scan To" options; then, press OK.

6. Press "▲" or "▼" to select "Scan to PC" and then press OK; press "Start" to begin scanning.

7. For merge scan, please put files to be scanned on the glass platen and then press "Start" to scan the next page (directly continuous scanning is available if scanning with the ADF).

9.3.2. Scan to E-mail

You may scan a black-white or color file as an appendix to the e-mail application, with specific operation steps as follow:

1. Be sure the printer and the computer are both switched on and connected with each other properly.

2. Please see Chapter 6.2.3.1 to configure the SMTP Client.

3. Please see Chapter 6.2.3.2 to configure the e-mail address book (for machine with the fax feature, alternatively, see Chapter 12.6).

4. Put an original on the glass platen or into the ADF (please see Chapter 2.5 for how to put an original).

5.Press "Scan" button on the control panel, and press "▲" or "▼" to select "Single Page Scan" or "Merge Scan", then press "OK" button.

6. Press "Menu" and then "OK" to enter the "Scan Setting" interface.

7. Press "▲" or "▼" to select "Scan To" options; then, press OK.

8. Press "▲" or "▼" to select "Scan to E-mail" and press "OK" button.

9. Press “▲” or “▼" to select "E-mail Address Book" or "Group Mail" and press "OK" button.

10. Press “▲” or “▼" to select address or group and then press "OK" button; press "Start" button to start scan.

11. For merge scan, please put files to be scanned on the glass platen and then press "Start" to scan the next page (directly continuous scanning is available if scanning with the ADF).

Please follow these instructions on the settings for group emails:

Set the group name for group e-mail sending by webpage, and set the members, i.e.the receivers, in the group of group email. After finishing scanning, firmware will send the scanned documents to the mail server. Then mail server sends the documents to every member of the group.

9.3.3. Scan to FTP

Be sure the user is in an Internet-connected environment in scanning files to FTP server. If you want to scan large files, you may need to input the server address, user name and password to log in the server, with specific operation steps as below:

1. Be sure the printer and the computer are both switched on and connected with each other properly.

2. Please see Chapter 6.2.3.3 to configure the FTP address book (for machine with the fax feature, alternatively, see Chapter 12.7).

3. Put an original on the glass platen or into the ADF (please see Chapter 2.5 for how to put an original).

4.Press "Scan" button on the control panel, and press “▲” or “▼" to select "Single Page Scan" or "Merge Scan", then press "OK" button.

5. Press "Menu" and then "OK" to enter the "Scan Setting" interface.

6. Press "▲" or "▼" to select "Scan To" options; then, press OK.

7. Press “▲” or “▼" to select "Scan to FTP" and press "OK" button.

8. Press “▲” or “▼" to select the server and press "OK" button; Press "Start" button to start scan.

9. For merge scan, please put files to be scanned on the glass platen and then press "Start" to scan the next page (directly continuous scanning is available if scanning with the ADF).

9.3.4. Scan to U disk

This printer supports scanning files to USB without a computer. Before operation, please make sure the USB has enough storage space. The specific operation steps are as follow:

1. Insert the USB into the printer's front USB interface.

2. Put an original on the glass platen or into the ADF (please see Chapter 2.5 for how to put an original).

3.Press "Scan" button on the control panel, and press "▲" or "▼" to select " Single Page Scan" or " Merge Scan", then press "OK" button.

4. Press "Menu" and then "OK" to enter the "Scan Setting" interface.

5. Press "▲" or "▼" to select "Scan To" options; then, press OK.

6. Press "▲" or "▼" to select "Scan to USB" and then press "OK"; press "Start" to begin scanning.

7. For merge scan, please put files to be scanned on the glass platen and then press "Start" to scan the next page (directly continuous scanning is available if scanning with the ADF).

The printer will create a folder named GG IMAGEScan in which all scanned files are saved in PDF or JPG.

Note:• USB formats supported: FAT and FAT32 for Windows system and MS-DOS (FAT) for macOS system.

9.4. Cancel Scan Job

During the scanning, two ways are available to cancel the job:

1. Press "Cancel" button on the control panel to cancel the job.

2. Click Cancel button on the scan progress bar interface of the computer to cancel the job.

10. Fax

10.1. Connect Devices

Note:• Some functions are not available depending on different printer models. If you have any questions, please contact the Customer Service.

• " LINE " port is used to connect fax with telephone line.

• " "port is used to connect external telephone.

Note:• It is recommended to use the traditional analog phone service (PSTN: Public Switched Telephone Network) in connecting telephone line. If a digital environment (for examples, DSL, PBX, ISDN or VoIP) used, please be sure to use a proper filter and configure digital settings correctly. For more information, please contact your digital service provider.

10.2. Fax Settings

You may follow the steps below to execute fax settings.

1. Press "Fax" and then "Menu" to enter the "Menu Setting" interface.

2. Press OK button to enter the Fax setting interface.

3. Choose the Fax option you want to set by pressing the page up and down keys.

4. Here can be a total of 16 settings, set the standard as follows:

No.	Options	Description
1	Resolution	You may select the faxing definition from options of “Standard, Fine, Super Fine and Image”. It defaults to “Standard”.
2	Original Size	You can select the desired size of the document to be Faxed. The available options are A4, Letter and Legal.
3	Luminosity	You can adjust the luminosity of Fax documents manually or automatically.
4	Fax Name	Input the fax name and save it.
5	Fax Number	Input the fax number and save it.
6	Group Sending	With the feature of multi-address sending, it supports inputting several numbers to be faxed one by one, with the ability of up to 20 fax numbers sent to at the same time.
7	Delay Sending	With the feature of delay in sending, you may set the fax number and delay time of sending (within 24 hours), making the fax sent upon the time set. 30 fax jobs at most supported now.
8	Forward the Received	After enabling "Forward to Fax", please set the number to be forwarded; upon receiving the fax, it will forward to the number set immediately; if enabling "Forward and Print" at the same time, the printer will automatically print a copy of fax job for saving after receiving the fax.
9	Send Settings	You can use the options in Send Settings to set the parameters for sending Fax.
10	Receive Settings	You can use the options in Receive Settings to set the parameters for receiving Fax.
11	Compatibility	If Fax is sent or received abnormally due to disturbance on telephone line, try to switch to VOIP compatibility mode.

12	Country / Region	To adapt to different telephone lines in different countries, settings on different countries or regions are needed.
13	Fax Report	You can use the options in Fax Report to print the Fax report as you need.
14	Active Job	Query for the list of all Faxes for Delay sending and you can press the Cancel button to delete a Delay sending job.
15	Communication record	Inquire the latest 30 times of Fax sending/ receiving.
16	Contacts	You can edit the contacts, group numbers, and print the contacts as well as the list of group numbers from Contacts.

10.3. Fax Functions

10.3.1. Send Fax

10.3.1.1. Auto fax sending

1. Put an original on the glass platen or into the ADF (please see Chapter 2.5 for how to put an original).
2. Press the Fax button and use the number buttons to enter the Fax number.

3. Press the Start button to start scanning the document.
4. If the original is put on the glass platen, the printer will give a prompt of "Scan the Next Page" after scanning one page. If the next page exists, please remove the original scanned and put the next page on the glass platen; then, press "Start". After all pages have been scanned, please press "OK".

5) After all scanning complete, activate the fax to send.

Note:• In order to prevent damage to this product, do not use a manuscript with correction tape, correction fluid, paper clips or staples on it. In addition, do not load photos, small manuscripts or brittle manuscripts into the automatic document feeder.

10.3.1.2. Manual fax sending

1. Put an original on the glass platen or into the ADF (please see Chapter 2.5 for how to put an original).
2. Press the Fax button and use the number buttons to enter the Fax number.
3. Press "Speaker" or pick up the receiver to input the fax number.

4. After hearing the fax prompt, press "Start" to confirm sending.

• If the party called receives the call, you may have a voice communication; after confirming the fax sending and hearing the fax prompt, press "Start" to begin sending.

10.3.2. Receive Fax

You have two ways to receive Fax, and the default for the printer is Fax mode.

Fax mode: determine each call from the calling party as a fax. When arriving the ring count set, it gives fax receiving signals and receives the fax automatically.

Telephone mode: determine each call from the calling party as a call. With this mode, you may need to pick up the receiver manually and then press “Start” on control panel to receive the fax.

10.3.2.1. Auto receiving under fax mode

In receiving the fax, the machine answers the call with the set ring count and then receive the fax automatically. The ring count defaults to 4 times.

To change the ring count, please see Chapter 10.2 and Chapter 15.

To adjust the ring volume, please see Chapter 12.1.8.

10.3.2.2. Manual receiving under telephone mode

Under telephone mode, there are 3 ways to receive a fax when there is a fax call:

1. Press “Start” on control panel and then the machine begins to receive.

2. Pick up the receiver or press “Speaker” and then “Start” on control panel; the machine begins to receive.

3. Use remote receiving method (only for external telephone), and after picking up the receiver, press "*90" on telephone panel and then the machine begins to receive.

Note:• The default for remote code is "*90". You can modify it by the path “Menu"——"Fax Settings"——"
Receive Settings"——“Remote Code”——“Turn On”——edit.
• If the toner in cartridge runs low, the printing job of fax received may not be completed perfectly. Please
replace with a new toner cartridge or find out the " Low in Toner, Continue to Print" option among the fax
receiving setting options and then set it as "On" for continuous printing.

10.3.3. Set the interference and the telephone line compatibility of VoIP system

If the fax is sent or received abnormally due to interference to telephone line, please improve the fax receiving and sending with the following methods.

1. Switch to VOIP Compatible mode with panel setting.

Please follow steps below to set :

1) After the machine is ready, press "Fax“ and then ”Menu“ to enter the ”Menu Settings" interface.

2) Press "OK" to enter the "Fax Settings" interface; next, press "OK".

3) Press "▲" or "▼" to find out the "Compatibility" option and then press "OK".

4) Press "▲" or "▼" to select "VoIP". Then, the VoIP Compatible mode is switched to.

2. Try to resend the fax in off-peak hours.

3. Consult your VoIP provider on if the network setting on fax transmission could be optimized.

10.3.4. Other Fax Functions

For settings on fax, please see Chapter 10.2 and Chapter 15.

1. Group Sending

This printer supports sending one original to several fax numbers, with the ability of up to 20 fax numbers sent to at the same time.

2. Delay Sending

You can enable Delay sending of Fax through the Control Panel. When this process is complete, the printer will scan the document to the memory, and get back to Ready state.

3. Active Job

You may check or delete the delay sending jobs stored currently with the "Active Job" menu.

4. Receive and forward

You can forward the Fax you receive. When you receive a Fax job, it will be stored in memory at first. Then the printer dials the Fax number you have specified and send the Fax. If a fax fails to be forwarded due to busy line or line failure, This printer will print a copy of fax contents to be forwarded for backup. (If the Redial feature is set, it will print after redialing) .

Please enable "Forward and Print" in enabling the forward function if there is a need of printing the fax contents to be forwarded.

5. Automatic Redial

If the number you have dialed is busy or is not responding when you send a Fax, the machine will automatically redial the number. You can set the redial attempts and interval.

6. Auto Shrink

When the paper size of the received Fax does not match the size specified in the printer, the received Fax will be shrinked according to the user-defined paper size to match the paper size in the printer.

If you disable the Auto Shrink option, the Fax will be printed at full size across multiple pages. Auto Shrink is turned on by default.

Note:
- Make sure that the default paper size setting is consistent with the size of the medium loaded in the paper tray.
- Receive in memory: in case of paper out or paper jam, This printer supports storing all faxes under receiving into its memory automatically; after handling the paper out or paper jam, it will print all of them automatically.

7. Speed dial

You may edit the quick-dial and group-dial numbers in the address book for quickly dialing in sending a fax.

1) Speed Dial Number

In the Fax interface, press the Contacts button to enter the speed dial interface, enter the speed dial number, and the system will automatically search for it. If the speed dial number exists, the corresponding information is displayed, then press the Start button to begin the Faxing; If the speed dial number does not exist, an error message is displayed; You can store 200 speed dial numbers at the maximum.

2) Group Dial Number

In a fax interface, press "Menu" key, then press "OK" button, enter the fax parameter setting interface, select Contacts - Group calls, enter the group call interface ,select the group dial to enter the group dial interface, select one of the groups, and press the Start button to begin group

Faxing. You can set a maximum of 10 groups for Group Dial with up to 99 numbers in each group.

10.4. PC-Fax

PC-Fax function allows you to send a document from your computer as a Fax.PC-Fax supports Windows system only. In this chapter, a Word file is taken as the example to show you how to operate.

10.4.1. Sending Fax with PC-Fax

1. Open the document to be faxed.
2. Click "File" and then "Print".
3. Select a printer named after the end of Fax and then click "Printer Properties"; next, set "Paper" and "Quality" of PC-Fax sending on the "Fax Settings" popup.

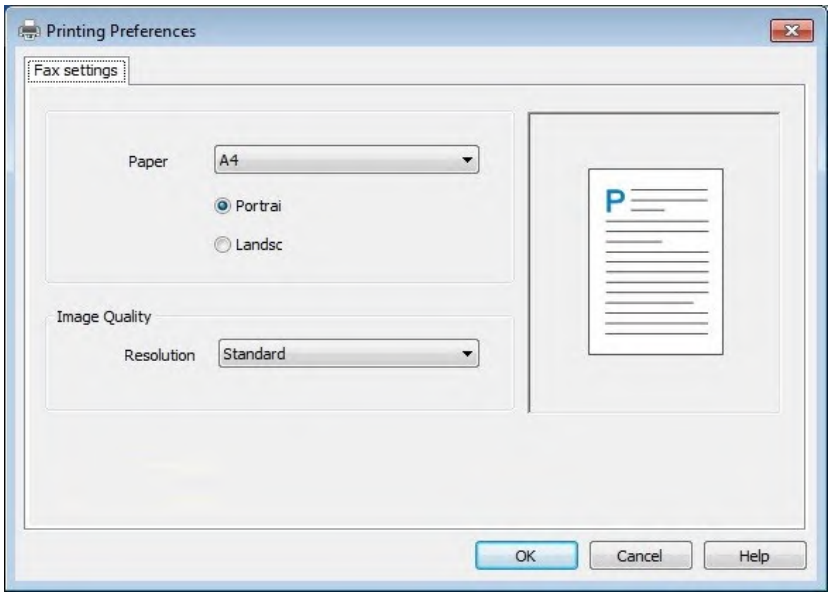

4. Click "Print" to present the "Send Fax" interface.

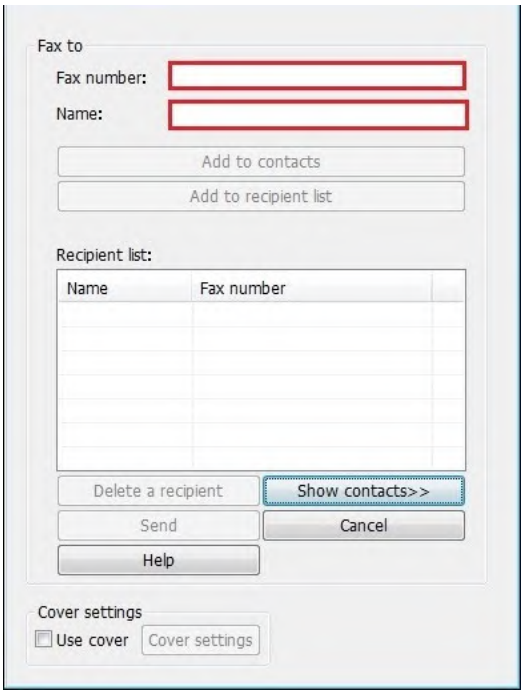

5. Enter the Name and Fax Number, then click Add to recipient list; If you want to send the Fax to multiple addresses, you can continue to enter their Name and Fax Number, then click Add to recipient list.

6. Click Send to start sending the Fax.

11. Mobile Print (applicable to Wi-Fi models)

11.1. AirPrint mobile print

Only printers that support AirPrint function can realize AirPrint printing. Please check if there is AirPrint mark on the packaging of the printer, in order to identify if the printer supports AirPrint function.

11.1.1. Operating systems supported by AirPrint mobile print

Applicable to iOS 7.0 or higher versions.

11.1.2. Preliminary preparations

1. A printer that has wireless network function.
2.iOS device mobile printing.

11.1.3. How to use AirPrint mobile printing

The printing steps may varied by applications, taking PDF as an example for explanation.

1. Turn on printer power.
2. Connect the iOS mobile device with wireless network of the printer (Please refer to Chapter 5 for how to connect).
3. Open the files you need to print in the format of PDF on the iOS device.
4. Click .
5. Tap "print".
6. Please make sure the GG IMAGE printer is selected.

If you select other printers (or no printer), please click printer option and then select your GG IMAGE printer.

7. Set printing parameters such as number of copies to print.
8. Tap "print".

Note: • If printing fails, please inspect if the iOS device is connected to the wireless network where the printer is connected to.

• If the iOS device cannot detect any printer, please inspect if power of the printer is turned on and if the printer is turned on.

12. General Settings

This Chapter mainly introduces some general settings.

Note:• The panel appearance may be a little different due to difference in type or function. All diagrams are only for reference.

12.1. System Settings

12.1.1. Ink saving setting

You can select the save toner mode which can reduce toner consumption and reduce printing cost. When save toner mode is “on”, the printed color will be lighter. Save toner mode is “off” by default.

1. Press "Menu" to enter the menu setting interface.
2. Press "▲" or "▼" to select "System Setting" and then press "OK".

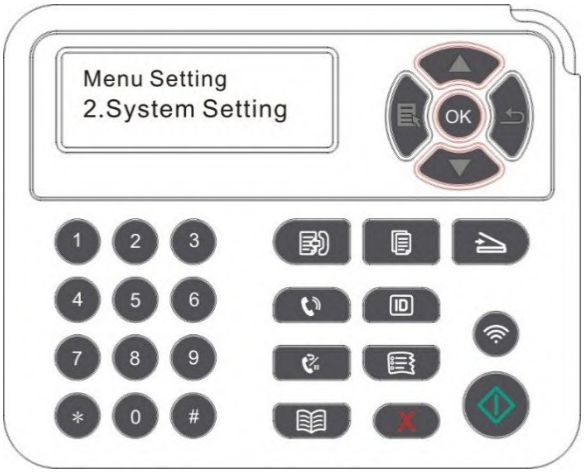

3. Press "▲" or "▼" to select "Toner save set" and then press "OK" to enable/disable the Ink Saving mode.

12.1.2. Language Setting

"Language Setting" is used to select the language to be displayed on the control panel.

1. Press "Menu" to enter the menu setting interface.
2. Press "▲" or "▼" to select "System Setting" and then press "OK".
3. Press "▲" or "▼" to select "Language set" and then press "OK" to do language setting.

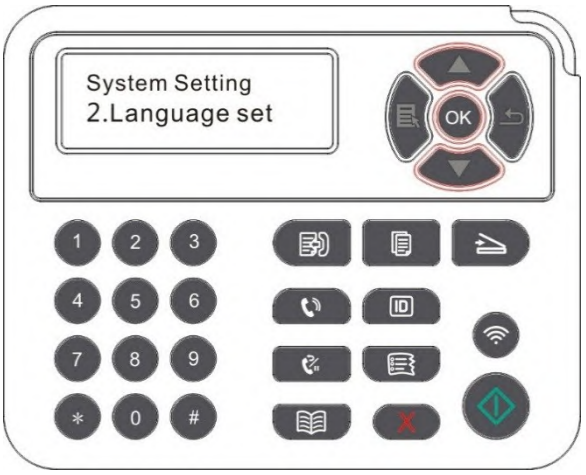

12.1.3. Restore Factory Settings

“Restore factory settings” is used to recover the default settings of printer. The printer will restart itself automatically after recovering factory settings.

1. Press "Menu" to enter the menu setting interface.
2. Press "▲" or "▼" to select "System Setting" and then press "OK".
3. Press direction key "▲" or "▼" to select the "Restore set" option and press "OK".

Note:• Factory settings of network printer can be recovered via embedded Web server (please refer to Chapter 6.2.4) .

12.1.4. Sleep Time Setting

Sleep mode can reduce the energy consumption of printer effectively, and “Sleep time setting” can be made in the idle time before the device enters sleep mode.

1. Press "Menu" to enter the menu setting interface.
2. Press "▲" or "▼" to select "System Setting" and then press "OK".
3. Press direction key “▲” or “▼” to select “Sleep time set” option, and press “OK” key to set the corresponding sleep time.

Note:• In sleep mode, the printer can be woken up by pressing any key or sending printing work.
• Sleep time of network printer can be set with the embedded Web server (Please refer to Chapter 6.2.3.4).

12.1.5. Mute printing

Set mute mode to realize low speed printing with low noise. When mute mode is “on”, printing will be in a low speed. This mode is “off” by default.

1. Press "Menu" to enter the menu setting interface.
2. Press "▲" or "▼" to select "System Setting" and then press "OK".
3. Press direction key “▲” or “▼” and select “Mute printing” option and press “OK” key to turn on/off this mode.

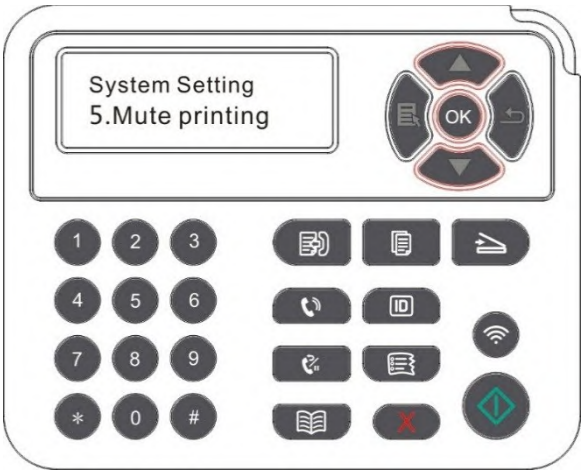

12.1.6. Print a Page for Clean & Fix

"Print a Page for Clean & Fix"function can clean the toner, paper powder and other inpurities, so as to realize better printing effect.The printer will start up Print a Page for Clean & Fix function automatically after the printer has printed a certain number of pages. You can also launch Print a Page for Clean & Fix function manually by setting up the printer panel. The steps are as follows:

1. Press "Menu" to enter the Menu Settings interface.
2. Press "OK" to select the "1.System Setting" option.
3. Press “▲”or“▼”and select "Clean & Fix" option, then press "OK" to start cleaning and fixing of the fuser unit.

12.1.7. Auto shut-off setting

“Auto shut-off setting” to set off condition and off delay of printer.

1. Press "Menu" to enter the Menu Settings interface.
2. Press "OK" to select the "System Setting" option.
3. Press direction key “▲” or “▼” to select options of “Auto off set”, press “OK” to set off condition and off delay.

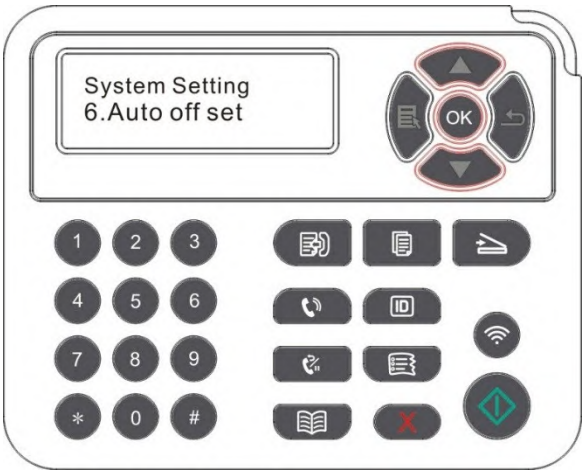

Note: Set auto off condition:

- Shutdown under no-port state (default configuration. : no port is connected, Wi-Fi function deactivated, printer is under standby or sleep mode.
- Shutdown under idle state: the printer is under standby or sleep mode.
- If auto off condition is satisfied, printer will be off at the preset time.
- After printer is off, power consumption is 0.5W or lower.
- Individual countries (or regions) do not support auto off setting.

12.2. Network Settings

You can check or set network status via network setting.

1. Press "Menu" to enter the menu setting interface.
2. Press direction key “▲” or “▼” and select “ Network Set” option.
3. Press “OK” key to set “Network set”, “wireless network setting” and “Wi-Fi Direct”.

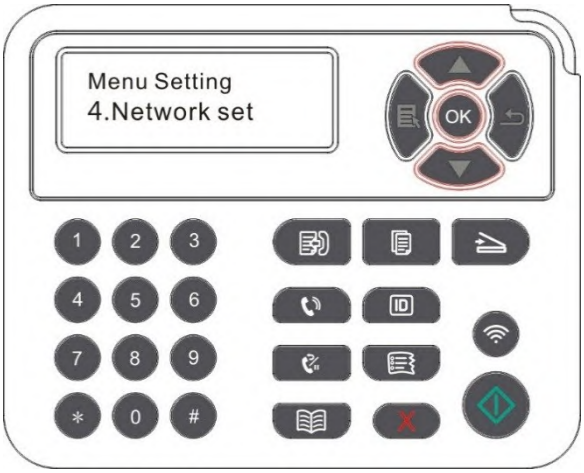

12.3. Network Information

You can check the network status through Network Information.

1. Press "Menu" to enter the menu setting interface.
2. Press direction key “▲” or “▼” and select “Network info” option and press “OK” key to view “wired network information”, “wireless network information” and “Wi-Fi Direct information”.

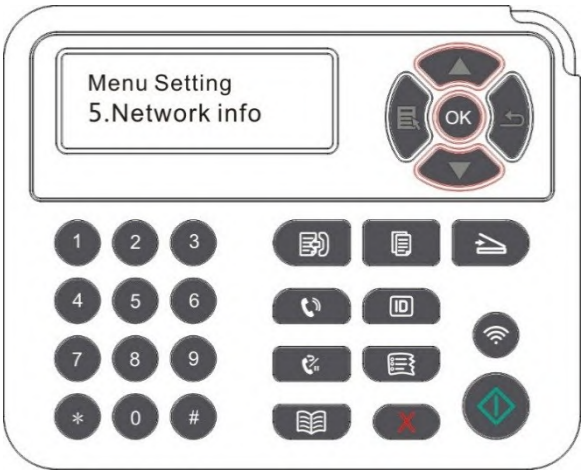

12.4. Print information report

You can print information report by operating control panel. These pages can help you to learn about product information, and diagnose and solve product failures.

1. Press "Menu" to enter the menu setting interface.
2. Press "▲" or "▼" to select "Info.report".

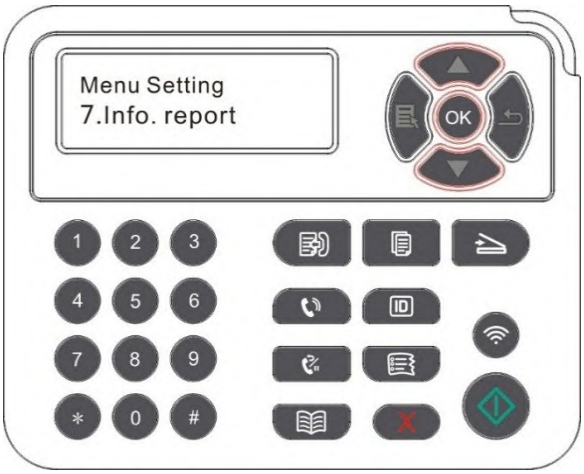

3. Press “OK” key to enter information report print. You can print product report according to needs.

Product reports that could be printed include Demo page, information page, menu structure page, network configuration, e-mail address, group e-mail, FTP address and Wi-Fi hotspot.

Note: • The product report above is the most complete version, and may be different from the product report of model that you actually use.

12.5. Residual amount of toner

You may check the current residual amount of toner in cartridge with the printer’s control panel.

1. Press "Menu" to enter the menu setting interface.
2. Press "▲" or "▼" to select "TonerRemainder".

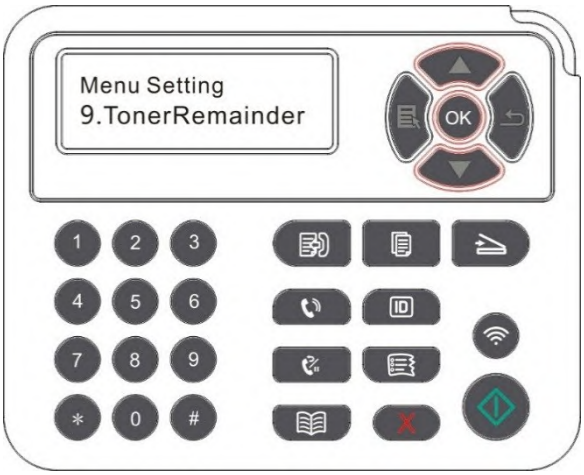

3. Press "OK" to enter and check the residual amount.

12.6. Configure the e-mail address book

(Applicable to machine with the fax feature)

1. Press “Scan” and then “Menu” on control panel to enter the “Menu Setting” interface.
2. Press "OK" to enter the "Scan setting" interface.
3. Press "▲" or "▼" to select “Email Add.” and then press “OK”.
4. Press "▲" or "▼" to select “Add. book edit” and then press “OK” to execute operations of Create, Edit/Check, Delete and Add to Group.
5. Press "▲" or "▼" to select “Group mail ed.” and then press “OK” to execute operations of Create, Edit/Check and Delete.

Note:• the address book members cannot be added to the group before creating a group e-mail.
• You will not receive the e-mail without proper settings on your e-mail box. For specific setting steps, please consult your network administrator.

12.7. Configure the FTP address book

(Applicable to machine with the fax feature)

1. Press “Scan” and then “Menu” on control panel to enter the “Menu Setting” interface.
2. Press "OK" to enter the "Scan setting" interface.
3. Press "▲" or "▼" to select “FTP Add. book” and then press “OK” to execute operations of Create, Edit/Check and Delete.

Note: • Before configuring the FTP address book, you may need to consult your network administrator for the server IP address, port number and FTP name.

12.8. Online upgrade

This printer supports firmware upgrade with its control panel without a computer.

1. Switch on the printer and then connect it to network.
2. Press "Menu" to enter the Menu Settings interface.
3. Press "▲" or "▼" to select “Online upgrade” and then press “OK”.
4. Please follow instructions to operate. After completion, please reboot the printer.

Note: • If the firmware fails to be downloaded, please reboot the printer and then operate again.

13. Routine Maintenance

Note:• Printer appearance may differ because of various models and functions, so the schematic diagram is only for your reference.

13.1. Cleaning the Printer

Note:• Please use mild detergents.

• Some parts of the printer are still in high temperature within a short time after use. To prevent burns, please don't directly touch places labled with high temperature warning in contact with internal components after opening the printer's front or rear cover.

1. Use a soft cloth to wipe the outside of the printer clean.

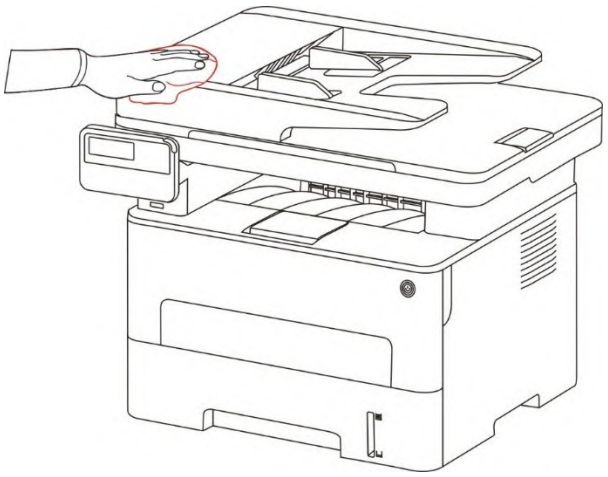

2. Open the scanner cover and then wipe the glass platen gently with a soft cloth.

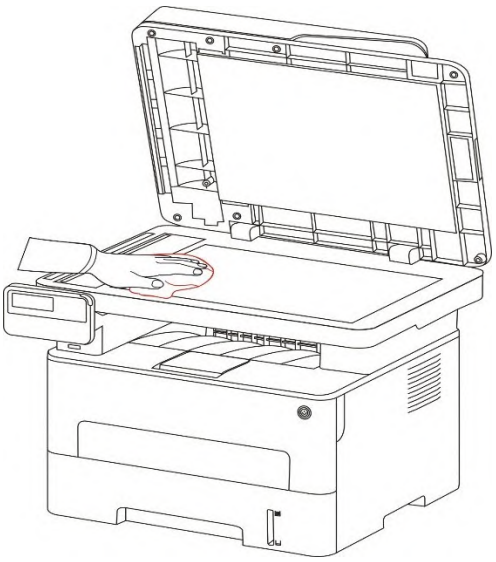

3. Open the front cover and take the laser toner cartridge out along the track.

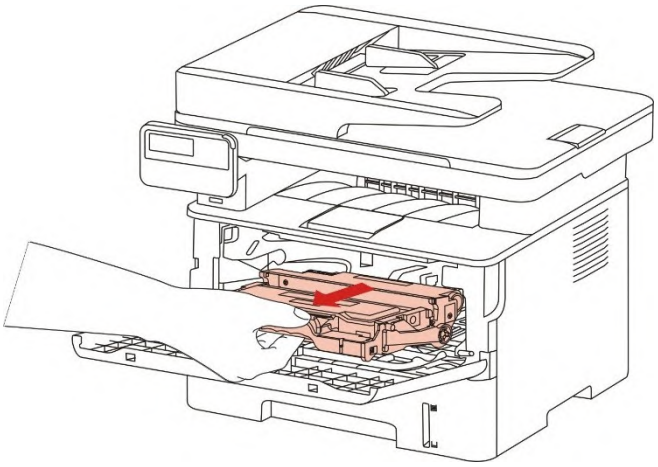

Note:• When removing the toner cartridge, put the toner cartridge in a protective bag or wrap it with thick paper to avoid direct light damaging the toner cartridge.

4. Clean the inside of the printer by gently wiping the shaded area, as shown in picture, with adry and lint-free cloth.

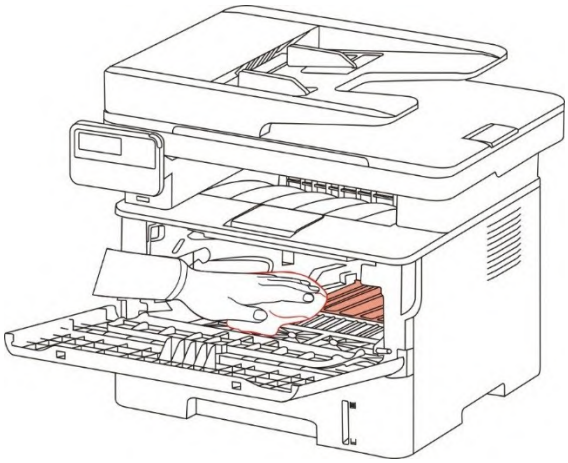

5. Wipe the LSU lens of printer gently with dry lint cloth.

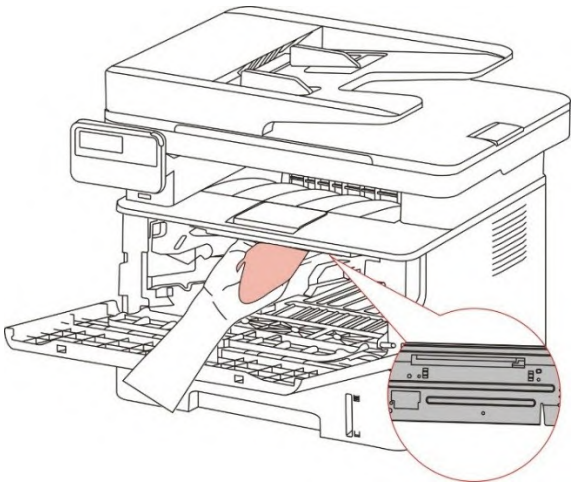

6. Open the auto feed tray and wipe the pickup roller gently with dry lint cloth.

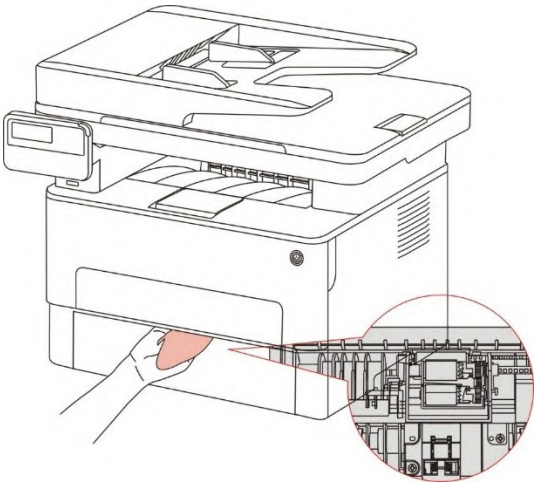

Note:• the machine with the ADF should be regularly cleaned, removing dirt on the top cover of the ADF. Please wipe the place as shown in figure with a soft cloth.

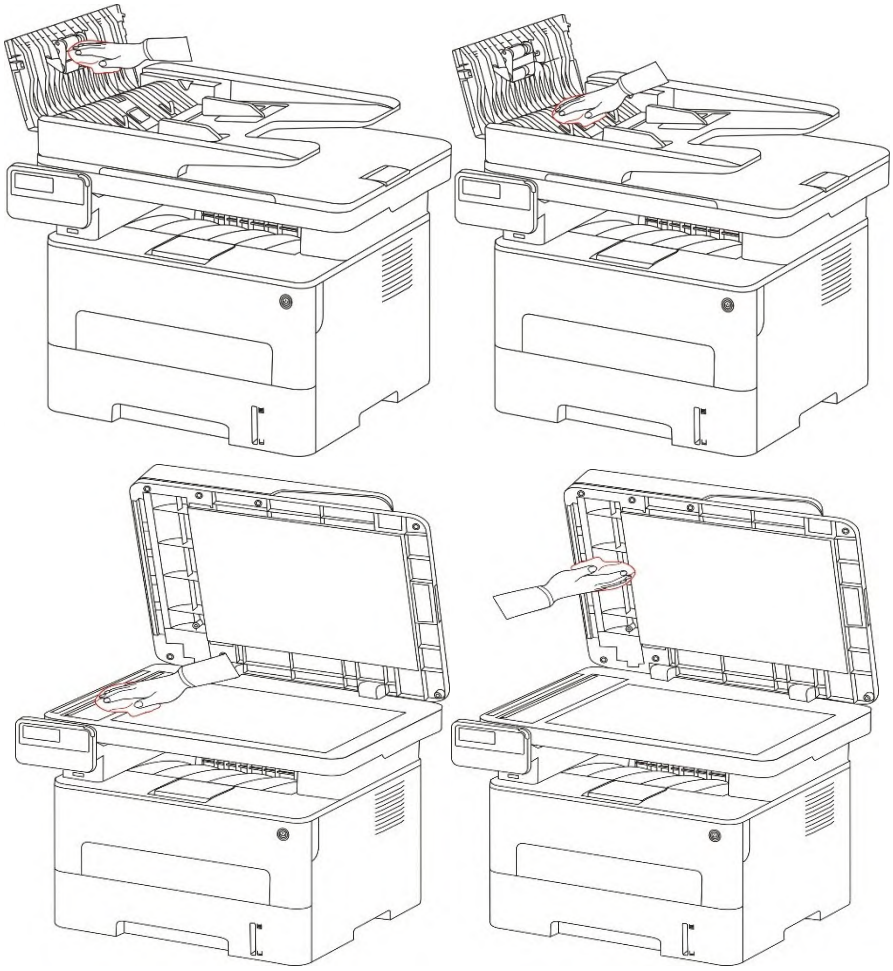

13.2. Toner cartridge and drum component maintenance

13.2.1. About toner cartridge and drum component component

1.Cartridge, use and maintenance of the drum assembly.

Please use the original toner cartridge for better printing quality.

Please pay attention to the following items while using the toner cartridge:

• Please keep the toner cartridge in a dry and dark place.

• Do not refill the toner cartridge without permission; otherwise, the damages caused will not be included in the scope of warranty of the printer.

• Please place the toner cartridge in cool and dry places.

• Please do not place the toner cartridge near ignition sources, as the toner inside it is inflammable and may cause fire.

• Please pay attention to toner leakage while it is taking out or disassembled. In case of toner leakage, skin contact with toner or spattering into eyes or mouth, please wash it with clear water immediately, or see a doctor if feeling unwell.

• When placing the cartridge, please stay away from children may contact area.

2. Service life of toner cartridge

• The service life of toner cartridge is depending on the toner quantity needed by printing.

• When a prompt that "The Toner Cartridge life Expired" appears on the display, it indicates its service life expires. So please replace it.

3. Service life of drum component

• When a prompt that "The Drum Unit life Expired" appears on the display, it indicates its service life expires. So please replace it.

13.2.2. Replace toner cartridge and drum component

Note: Please pay attention to the following matters before replacing toner cartridge:

• Since there may be toner on the surface of toner cartridge, please pay attention while taking it out to avoid spattering.

• Please place the toner cartridge taken out on paper to avoid large-scale spattering of toner.

• When installing, do not touch the surface of the toner cartridge, so as to avoid scratching it.

Toner cartridge replacement steps:

1. Power off the printer.

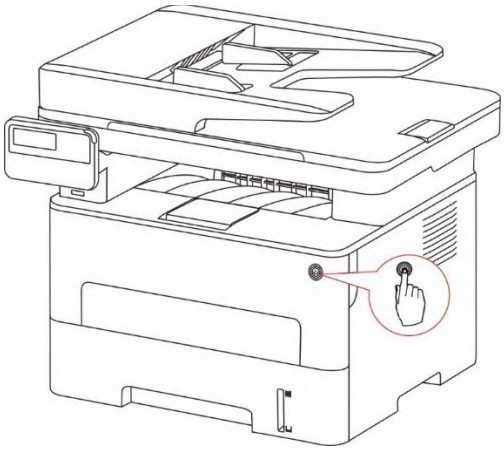

2. Open the front cover and then remove the laser toner cartridge along the guide rail.

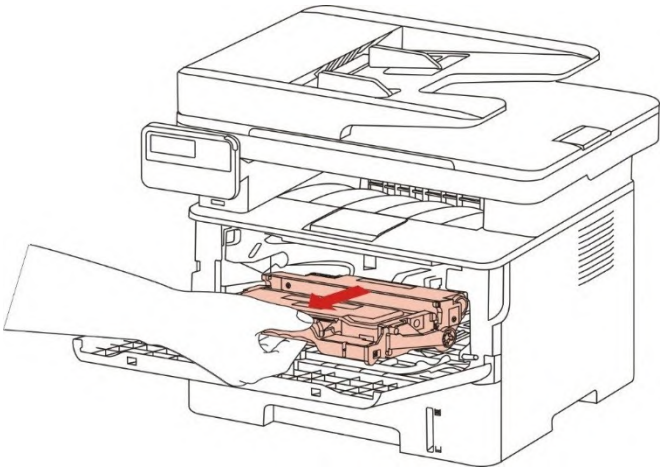

3. Press the blue button on the left side of drum component with left hand and lift the toner cartridge handle with right hand at the same time to take the toner cartridge out.

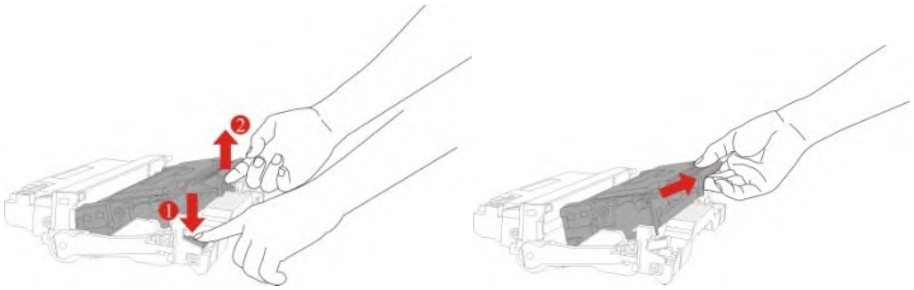

4. Open the package of the new toner cartridge and hold the toner cartridge handle to shake it left and right for 5 – 6 times, so that the toner inside can be uniformly dispersed.

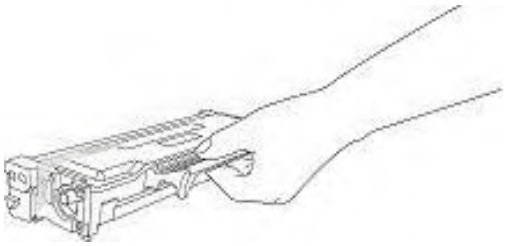

5. Pull the seal out and take the toner protection cover out.

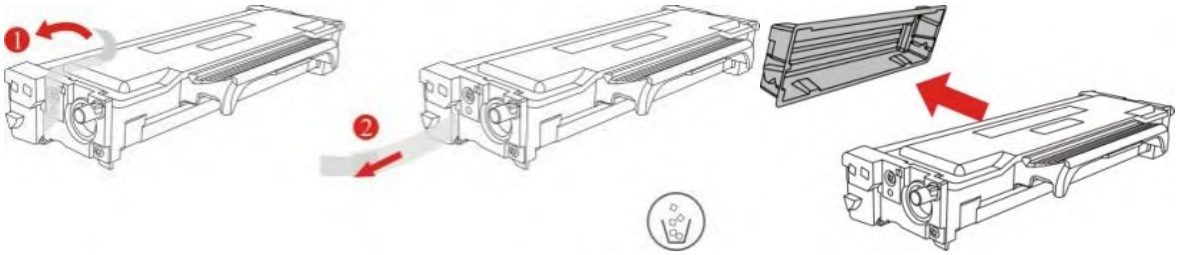

6. Install the drum component along the inner track to finish installing toner cartridge.

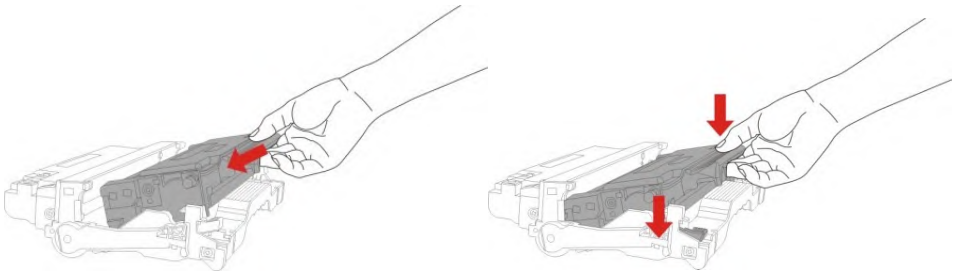

7. Take the drum component with toner cartridge installed and install it inside the printer along the inner track of printer to finish installing.

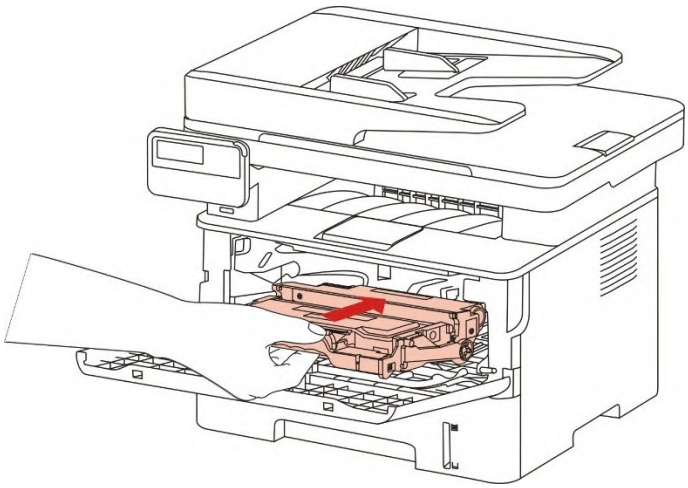

8. Close the front cover.

Replace the drum assembly steps are as follows:

1. Power off the printer.

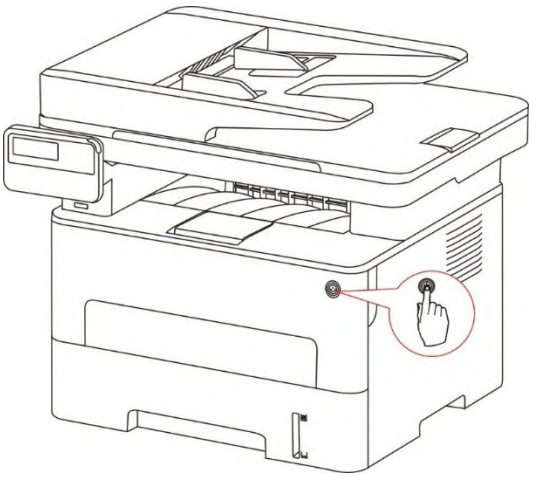

2. Open the front cover and take the laser toner cartridge out along the track.

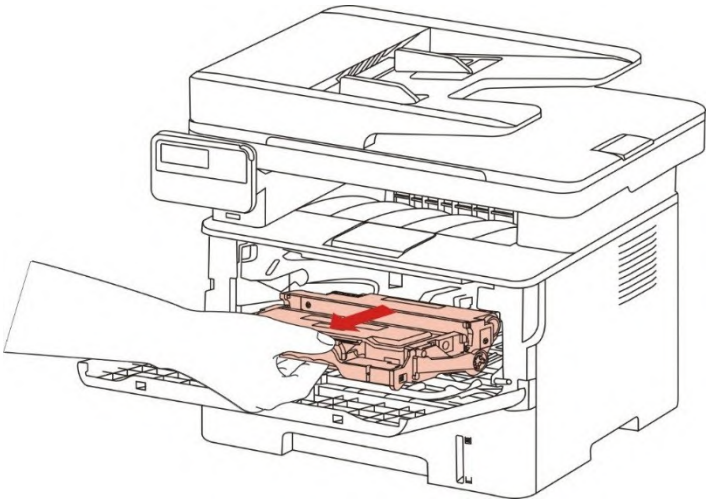

3. Press the blue button on the left side of drum component with left hand and lift the toner cartridge handle with right hand at the same time to take the toner cartridge out.

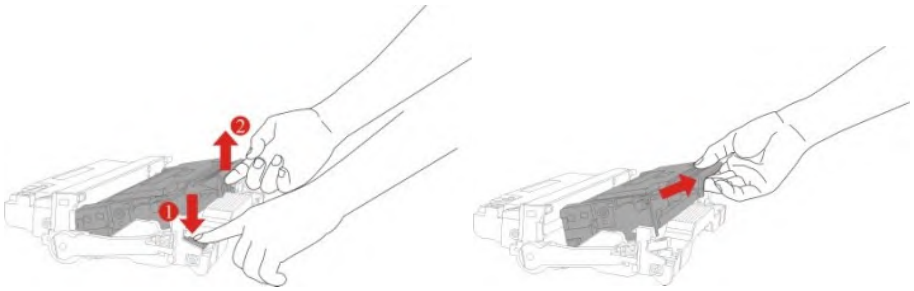

4. Open the package of new drum component, take the protection device of drum component, and put the drum component on a horizontal table.

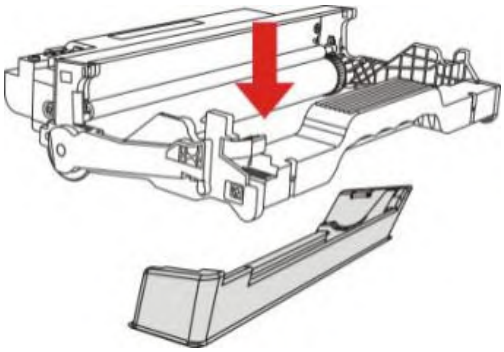

5. Install the drum component along the inner track to finish installing toner cartridge.

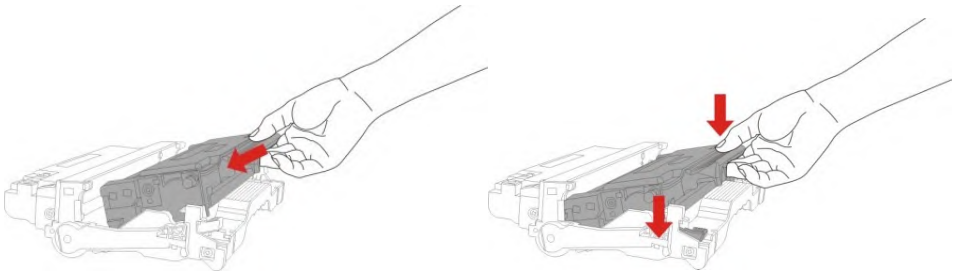

6. Take the drum component with toner cartridge installed and install it inside the printer along the inner track of printer to finish installing.

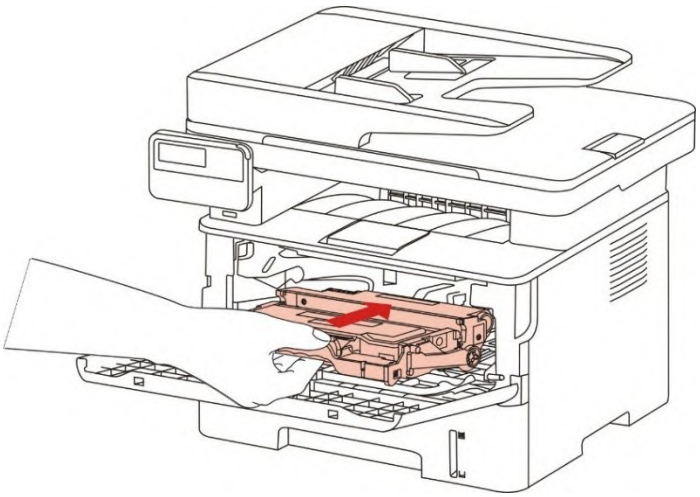

7. Close the front cover.

14. Troubleshooting

Please read this section carefully. It may help you to solve common problems encountered during the printing process. If the problems persist, please contact GG IMAGE Aftersales Service Centre.

Prior to handling common problems, first check that:

• The power cord is connected correctly and the printer is powered on.

• All of the protective parts are removed.

• The toner cartridge is installed correctly.

• The paper is correctly loaded into the tray.

• The interface cable between the printer and the computer is connected correctly.

• The correct printer driver has been selected and installed properly.

• The computer port is properly configured and is connected to the correct printer port.

14.1. Cleaning Jammed Paper

14.1.1. Middle jam

Note:• When removing the paper jam, please don't touch immediately places labled with high temperature warning in contact with internal components after opening the printer's front or rear cover, to prevent burns.

1. Pull paper tray out.

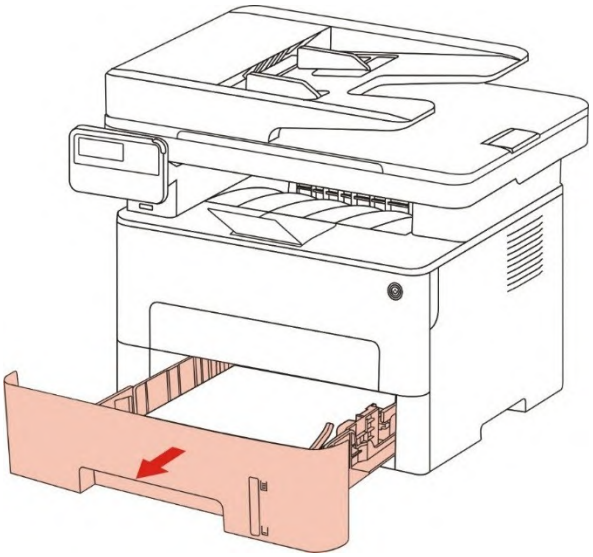

2. Gently pull the jammed paper out.

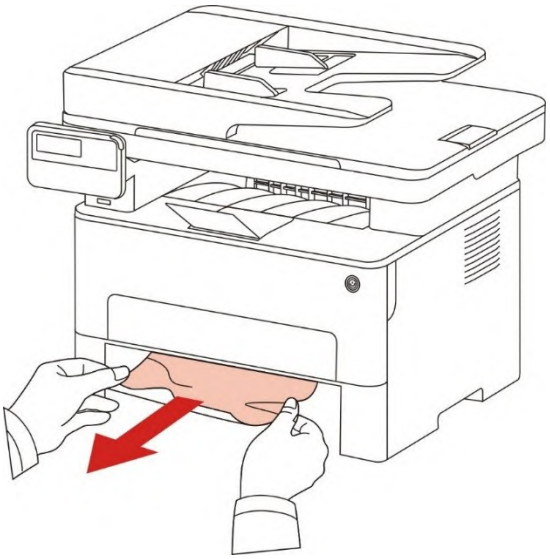

3. Install paper tray.

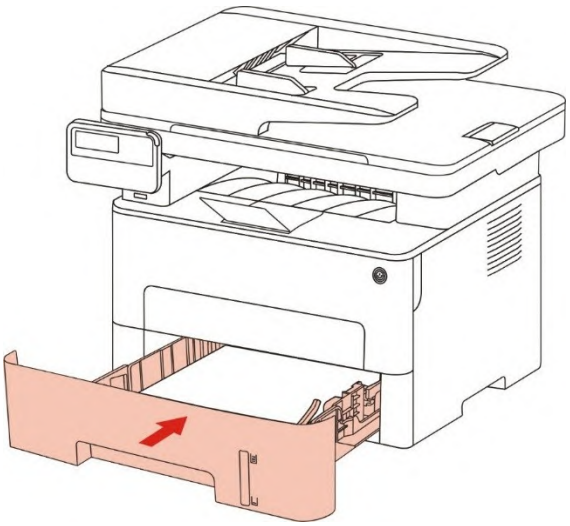

4. Open the front cover.

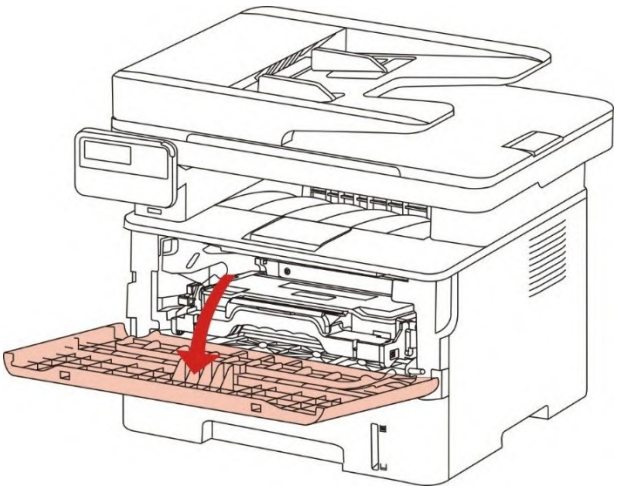

5. Take the laser toner cartridge out along the track. (For the purpose of preventing printing quality from affecting by the exposure of photosensitive drum, please put the laser toner cartridge inside the protection bag or warp it with thick paper).

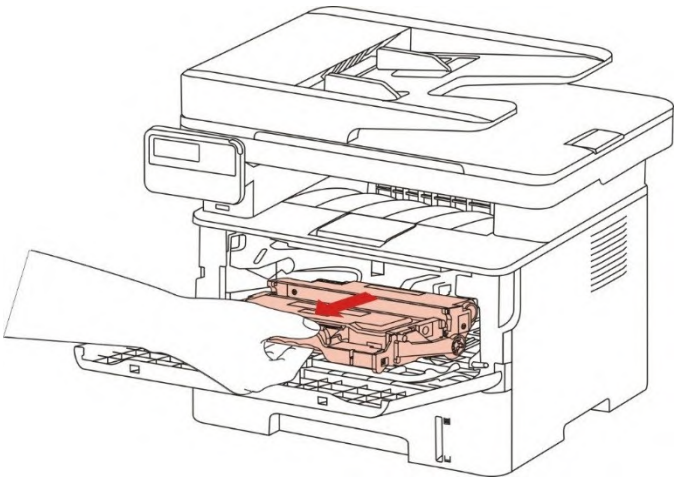

6. Gently pull the jammed paper out.

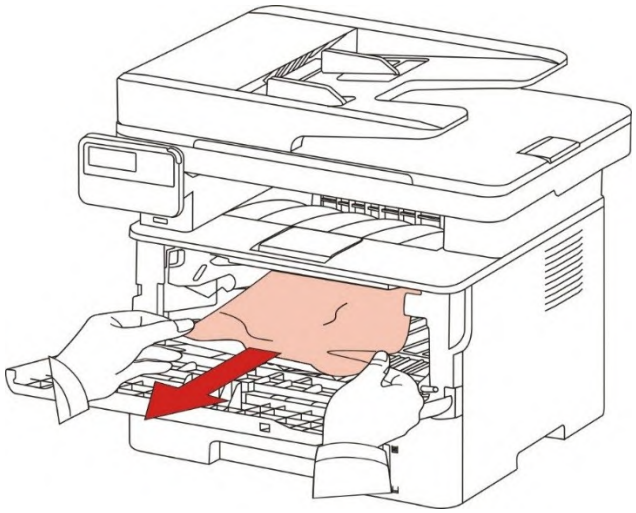

7. After taking out papers jammed, install the laser toner cartridge again and close the front cover, then the printer will recover printing.

14.1.2. Paper Jam in the Fuser Unit

Note:When papers jammed in fuser unit are taken out, please pay attention and do not touch the shaded area shown below in order to avoid burns.

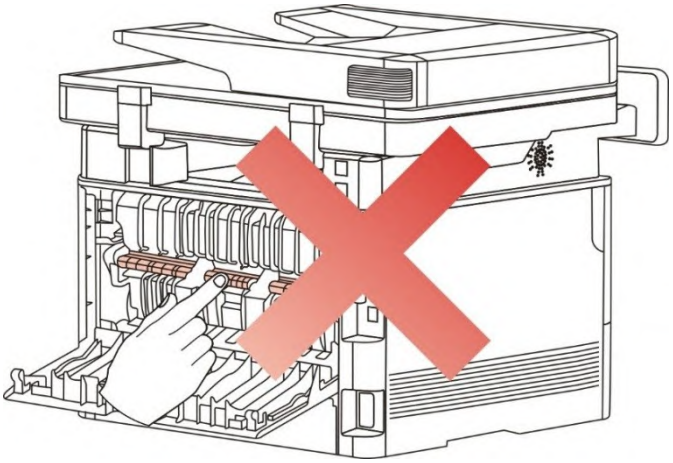

1. Open the front cover and then remove the laser toner cartridge along the guide rail.

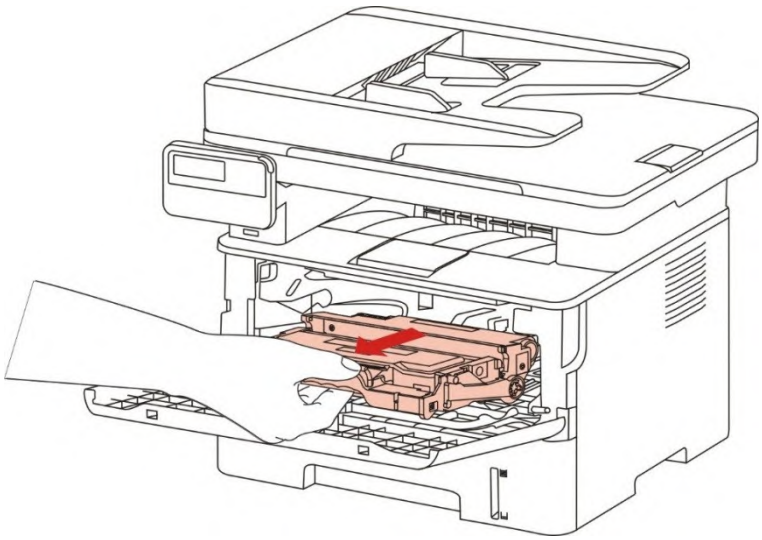

2. Open the rear cover.

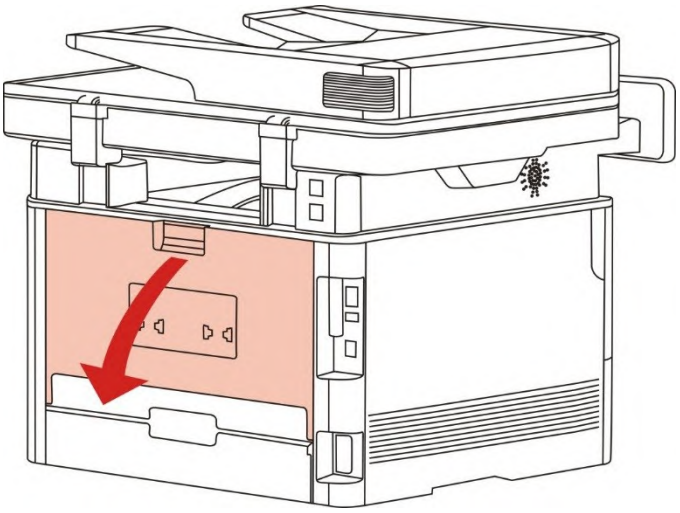

3. Open the fuser door using the handles on both sides.

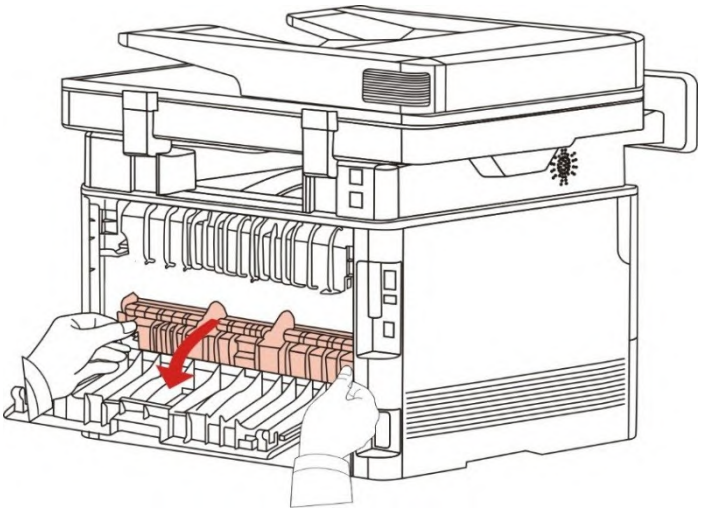

4. Gently pull the jammed paper out.

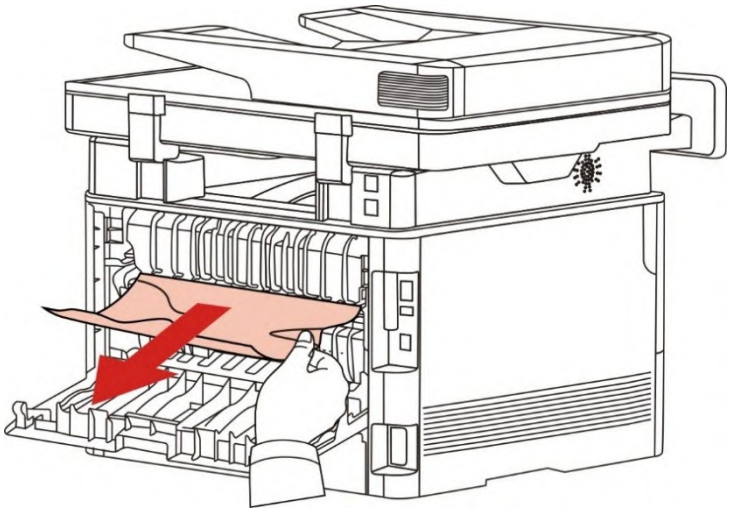

5. Close the back cover after removing the paper jammed.

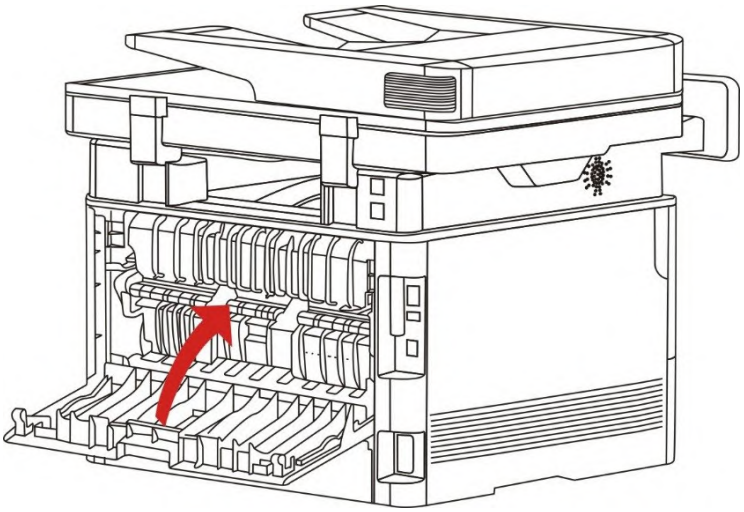

6. Install a new toner cartridge and then close the front cover; then, the printer will recover printing automatically.

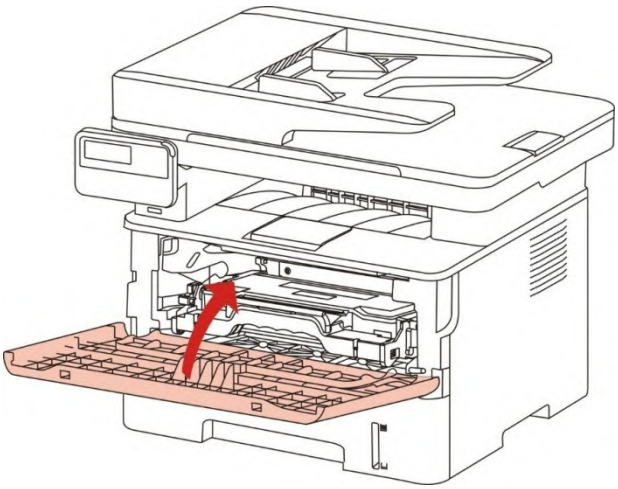

14.1.3. Duplex Unit Jam

1. Remove the duplex printing unit from the back of the printer.

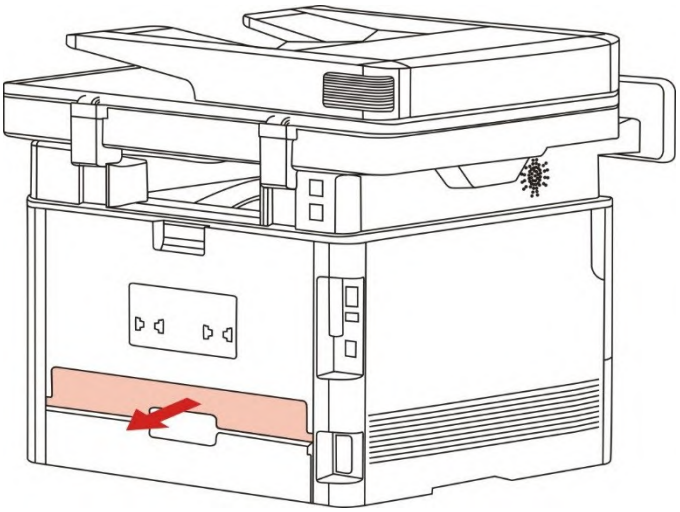

2. Remove the jammed paper from the duplex unit.

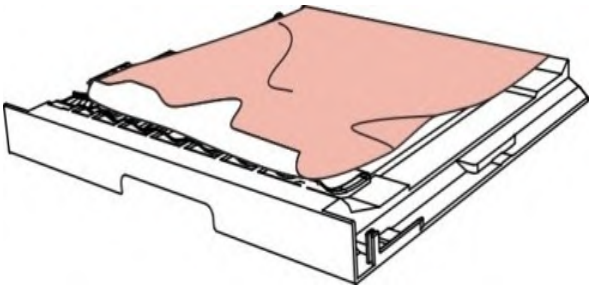

3.If the paper does not come out along with the duplex unit, open the tray and remove the jammed paper directly from the bottom.

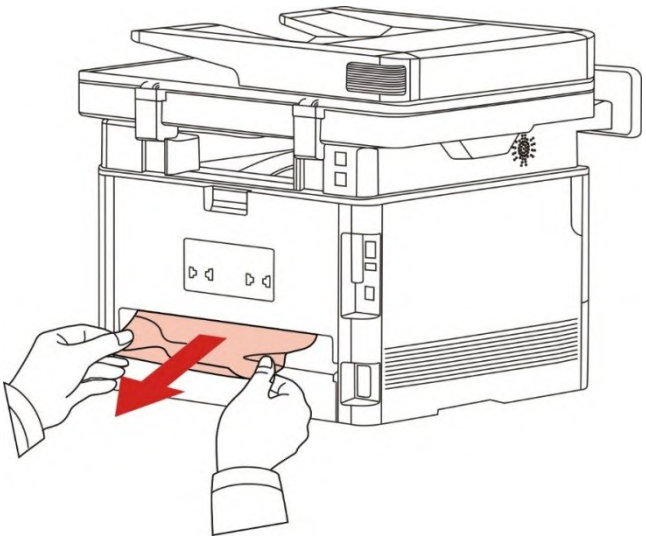

4. After taking papers jammed out, install the duplex unit back and inspect other parts to the product. If it can be ensured that there are no jammed papers, open and close the front cover and then the printer will recover printing automatically.

Note:After all papers jammed are taken out according to the above steps, close the front cover and tidy the papers in paper tray, then the printer will recover to print automatically.

• If the printer still does not start printing, please check that all the jammed paper inside the printer has been cleared.

• If you cannot remove the jammed paper yourself, please contact your local GG IMAGE authorized repair center or send the printer to the nearest GG IMAGE authorized service center for repair.

• Printer appearance may differ because of various models and functions, so the schematic diagram is only for your reference.

14.1.4. A paper jam occurs on the automatic document feeder (ADF)

1. Open the ADF's top cover.

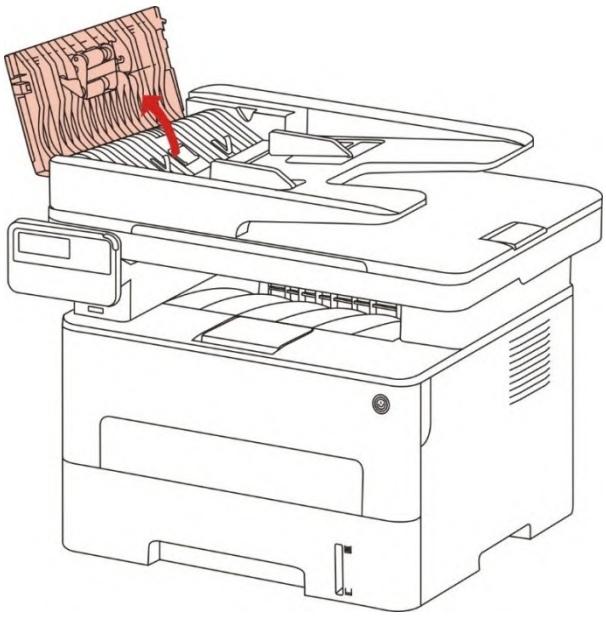

2. Remove the paper jammed from the ADF.

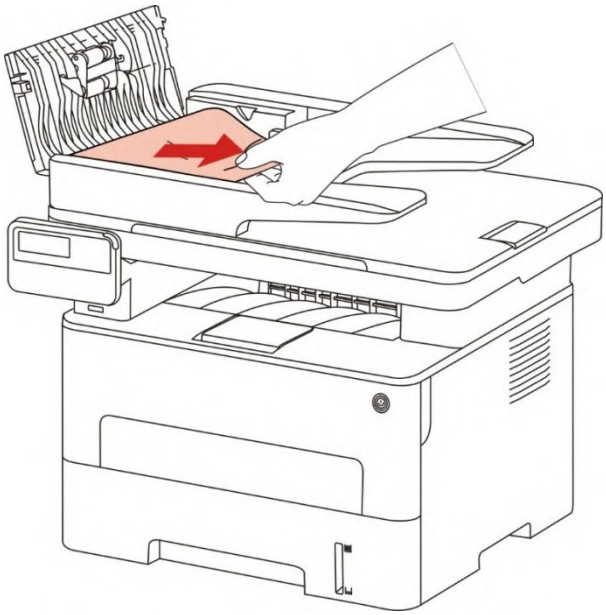

3. After removing the paper jamed, close the top cover and then the printer will be back to the ready state.

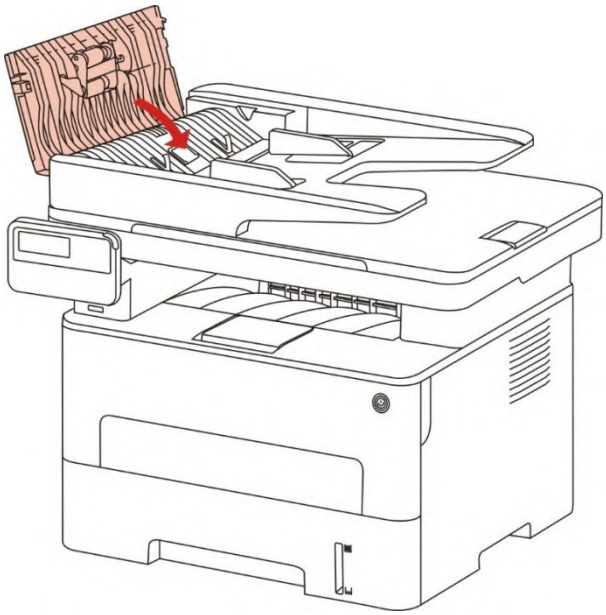

4.If it is difficult to remove the paper jammed, please try to open the scanner cover and remove it from the pressing block.

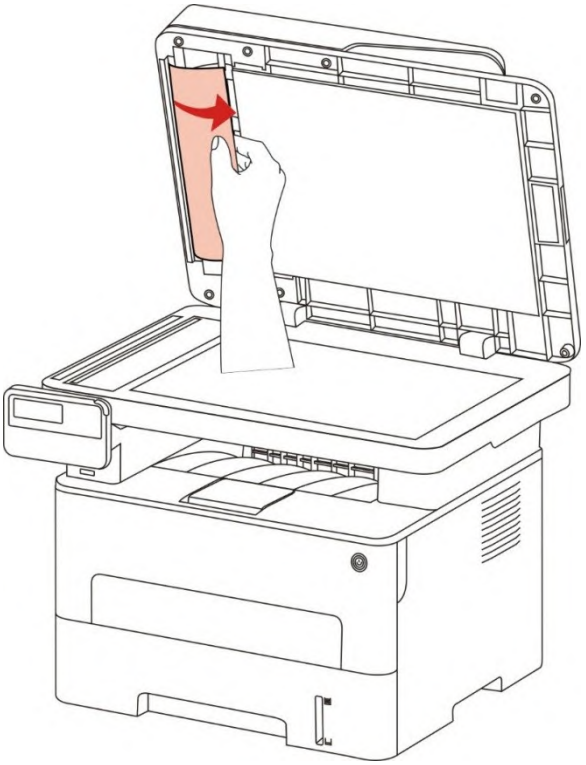

14.2. Software Failure

Problem	Solution
The printer icon will not be displayed in the “Printer and fax” folder.	Reinstall the printer driver. Ensure that the USB interface cable and the
The printer is in Ready mode but it will not perform any print job.	If the failure still exists after restarting the Make sure the network cable of USB cable is connected correctly.
Failed to install the driver	Check whether the print spooler service is enabled. Check the power supply and the connection of the printer.
The driver cannot be used if the IP address of the printer has been changed	Modify the port IP address of the printer driver. If the above method does not work, please reinstall the printer driver. It is recommended that a fixed IP address should be set to the network printer. In the DHCP network, it is recommended to bind the IP address with the MAC address of the printer.

14.3. Error Message

Error Message	Cause	Measure
No Laser Toner Cartridge Detected	The laser toner cartridge is installed incorrectly or laser toner cartridge is damaged.	The laser toner cartridge is installed correctly or new laser toner cartridge is replaced.
Toner Low (this prompt is displayed together with the standby picture alternately.)	The toner in cartridge runs low.	Please replace with a new toner cartridge.
As the toner is low, it is not available to accept the printing job (this prompt is displayed together with the standby picture alternately.)	If the toner in cartridge runs low, the printing of fax job received cannot be executed. (Normal in fax sending, file printing, copying and scanning.)	Please replace with a new toner cartridge or find out the " Low in Toner, Continue to Print" option among the fax receiving setting options and then set it as "On" for continuous printing. (Note: once the printer detects that the toner in cartridge doesn't run low during booting or opening and closing its cover, it will set the "Low in Toner, Continue to Print" option enabled before by user back to "Off".)
Toner cartridge life expired.	The toner in cartridge runs out.	Please replace with a new toner cartridge.
Feed jam	The print paper is loaded incorrectly. The paper is outside of the specification range.	Please correctly load the print paper.
Printer paper jam	The print paper is loaded incorrectly.	Please correctly load the print paper.
Scanner is Busy	With other scan jobs.	Please cancel the current scan job or wait for the completion of other scan jobs.
Scan failed	Scanner internal failure.	Please contact GG IMAGE Customer Service.
No paper in ADF	If you have selected ADF as the scan source, this message appears when you start a copy or scan job without loading paper in the ADF.	Please put in the original properly.

Paper jam occurred on ADF	This prompt appears when there is a feed jam or feed failure in copying or scanning with the ADF.	Please remove the paper jam, arrange well and put originals into the ADF for scanning again.

Note: • If the problem remains, please contact GG IMAGE Customer Service.

14.4. Common Troubleshooting

14.4.1. Common Trouble

Trouble Type	Fault phenomenon	Cause	Solution
Problems in printing	Poor print quality	See 14.4.2 Image Defects.	See 14.4.2 Image Defects.
Problems in copying	Failed to copy	The scanner is damaged.	Please contact GG IMAGE Customer Service.
	Copy Image Abnormal	• The scanner is dirty or defective. • The toner cartridge is dirty or damaged.	• Clean the scanner. • It is suggested to replace the original toner cartridge.
Problems with the Printer	The printer does not work	• Power cord of the device is not properly connected. • The cable between the computer and the printer is not connected properly. • Error in specifying the print port. • The printer is offline and User Guide of Printer is checked. • The printer has not recovered from an internal error, such as a paper jam, paper empty, etc. • Driver program of printer is not installed correctly. • The LCD screen prompts error messages.	• Ensure proper connection of the power cord. • Please disconnect the printer cable and then connect it again. • Please check printer settings of the Windows to make sure the printing job could be sent to the correct port. If the computer is equipped with several ports, please be sure to connect the printer to the correct port. • Please make sure the printer is online without any abnormality. • Please remove errors to make the printer return to normal. • Please uninstall and then reinstall the printer driver.

	Online printing does not work	• The cable between the computer and the printer is not connected properly. • Driver program of printer is not installed correctly. • Printer internal failure.	• Please disconnect the printer cable and then connect it again. • Please uninstall and then reinstall the printer driver.
Problems in scanning	Scanning error	• Data cable of the device is not properly connected. • The scan driver is installed incorrectly. • The LCD screen prompts error messages.	• Ensure proper connection of the data cable. • Reinstall the scan driver.
Problems with Paper Handling	Paper feed failure	• The printer paper isn't put properly. • The print media is beyond the usage specification range. • The pickup roller is dirty. Too many papers in paper tray.	• Please install printing medium correctly; please print with manual feed tray if special printing medium is used to print. • Please use the print media within the specification range. • Please clean the pickup roller. Take the excessive papers out from paper tray; please print with manual feed tray if special printing medium is used to print.
	Paper Jam	• Too many papers in paper tray. • The print media is beyond the usage specification range. • There is foreign matter in the feed channel. • The pickup roller is dirty. • Internal parts failure.	• Take the excessive papers out from paper tray; please print with manual feed tray if special printing medium is used to print. • Make sure to use the paper that meets specifications. please print with manual feed tray if special printing medium is used to print. • Clean the paper path. • Please clean the pickup roller.
	Print multipage feed	• Excessive static electricity on the print media. • The print media is damp or sticks together. • Internal parts failure.	• Re-separate the print media to eliminate some static electricity. It is suggested that you use the recommended print media. • Separate the print media or use better quality and dry print media..

Note:• If the trouble still can not be shooted after the above operations, please contact GG IMAGE Customer Service.

14.4.2. Image Defects

Problem	Cause	Solution
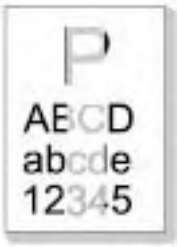 The printout is whitish or light	• The print media does not meet the usage specifications, for example the media is damp or too rough. • The resolution in the print program is set too low, concentration setting is too low, or toner saving mode is ticked. • Toner cartridge is damaged. • Toner is low.	• Please use proper print media within the specification range. • Set the resolution and concentration setting of program, or cancel ticking the save toner mode. • It is suggested to replace the original toner cartridge.
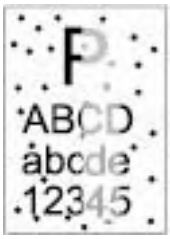 Toner spots	• Dirty toner cartridge or toner leakage. • Toner cartridge is damaged. • The print media that does not meet usage specification is used. For example, the media is damp or too rough. • The paper path is dirty. • If toner spots appear when copying and scanning, the platen glass may be dirty. • The scanner is dirty or damaged.	• It is suggested to replace the original toner cartridge. • Please use the print media within the specification range. • Clean the paper path. • Clean the platen glass.
 White spots	• The print media that does not meet usage specification is used. For example, the media is damp or too rough. • The paper path is dirty. • Inner damage of toner cartridge. • The reflective glass of the laser inside the printer is dirty.	• Please use the print media within the specification range. • Clean the paper path. • It is suggested to replace the original toner cartridge. • Please clean the LSU lens.
 Toner comes off	• The print media that does not meet usage specification is used. For example, the media is damp or too rough. • The printing paper medium set and paper medium placed are not consistent. • The inside of the printer is dirty. • Toner cartridge is damaged. • The parts inside the printer are damaged.	• Please use printing medium within the specification scope, and use manual feed tray for printing in case of special medium. • Please print with corresponding paper medium. • Clean the inside of the printer. • It is suggested to replace the original toner cartridge.

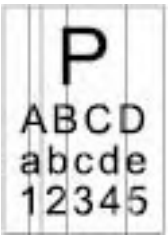 Black vertical stripes	• Dirty toner cartridge. • Damaged inner parts of toner cartridge. • The reflective glass of the laser inside the printer is dirty. • The paper path is dirty. • If black vertical stripes appear when copying or scanning, the scanner or the platen glass may be dirty. • Scanner Light bulb has smudges. • The scanner is damaged.	• Clean or replace toner cartridge • Clean the mirror of the laser at the back of the printer. • Clean the feed path of printer. • Clean the scanner or the platen glass.
 Black background(gray background)	• The print media that does not meet usage specification is used. For example, the media is damp or too rough. • Dirty toner cartridge • Damaged inner parts of toner cartridge. • The paper path is dirty. • The transfer voltage inside the printer is abnormal. • Scanning exposure. • If black background or gray background appears when copying and scanning, the platen glass may be dirty.	• Please use the print media within the specification range. • Clean or replace toner cartridge • Clean the paper path inside the printer. • Please close the cover on the manuscript, and then carry out copying and scanning. • Clean the platen glass.
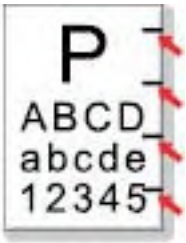 Cyclical traces appear	• Dirty toner cartridge. • Damaged inner parts of toner cartridge. • The fuser component is damaged.	• Clean or replace toner cartridge • Please contact customer services center to replace to a new fuser assembly.
 Skewed pages	• The printer paper isn't put properly. • The feed channel of the printer is dirty.	• Make sure the print paper is placed correctly. • Clean the paper path inside the printer.

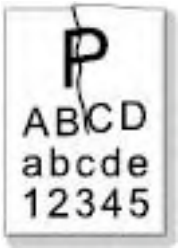 Wrinkled paper	• The printer paper isn't put properly. • The print media does not meet the usage specification. • The feed channel of the printer is dirty. • The fuser component is damaged.	• Make sure the print paper is placed correctly. • Please use print media within the specification range. • Clean the paper path inside the printer. • Please contact customer services center to replace to a new fuser assembly.
 The back of the printout is dirty	• Dirty toner cartridge • The transfer roller inside the printer is dirty. • The transfer voltage inside the printer is abnormal.	• Clean or replace toner cartridge • Clean the internal transfer part of the printer.
 Whole page dark	• Toner cartridge is improperly installed. • Inner damage of toner cartridge. • Abnormal internal charging of machine or the toner cartridge is not charged. • If all-black image appear when copying and scanning, maybe it is scanning exposure, and the cover on the manuscript is not properly closed. • The scanner is damaged.	• Install ink cartridge correctly. • It is suggested to replace the original toner cartridge. • Please close the cover on the manuscript, and then carry out copying and scanning.
 The toner does not adhere to the paper	• The print media that does not meet usage specification is used. For example, the media is damp or too rough. • The inside of the printer is dirty. • Toner cartridge is damaged. • The parts inside the printer are damaged.	• Please use printing medium within the specification scope, and use manual feed tray for printing in case of special medium. • Clean the inside of the printer. • It is suggested to replace the original toner cartridge.
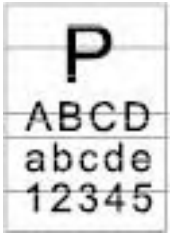 Horizontal stripes	• The toner cartridge is not installed correctly. • The toner cartridge may be damaged. • The parts inside the printer are damaged.	• Install ink cartridge correctly. • It is suggested to replace the original toner cartridge.

Note:• Failures above can be improved by cleaning or replacing toner cartridge. Please contact customer services center if the problem can still not be solved.

14.5. Fax faults

Trouble Type	Fault phenomenon	Solution
Telephone line or connection fault	The dialing tone cannot be heard.	• If you cannot hear the dialing tone after picking up the receiver, please check the connection of all telephone lines between the fax and the wall-mounted socket. • Use the telephone connecting another line to test the wall-mounted socket; if there is no dialing tone, please check the communication line.
	The printer cannot response in a fax call automatically.	• Make sure it is not the "Telephone Mode" as the receiving mode. (Please see Chapter 10.3.2 to set the receiving mode as "Fax Mode".)
Fax receiving fault	The fax cannot be received	• Make sure the fax is set with the correct receiving mode. (Please see Chapter 10.3.2 to select the receiving mode.) • If the telephone line is interfered, please try to set it as VoIP in compatibility (For compatibility setting, please see Chapter 10.3.3) .
	The fax received is somewhat blank or of poor quality	• The fax sending faxes may have a fault. • The telephone line may have a fault due to noise. • Check the printer through copy. • The toner cartridge comes to the end of its expected service life. Please replace it. (Please see Chapter 13.2.2 "Replace the Toner Cartridge".)
	The fax is well received but cannot be printed	• Check if the toner in cartridge has run low. Replace with a new toner cartridge and then print. • Find out the option of " Low in Toner, Continue to Print" among receiving setting options and then set it as On.
	An external call is being handled.	• If the Telephone mode adopted, please press Startup and then pick up the receiver immediately. • If answering the call with the extension telephone, please input the 3-digit fax receiving code (*90 by default). When the fax begins to response, please hang up.

	The dialing fails to be done	• Please check the connection of power cable. • Please check the connection of telephone line. • Change the (audio/pulse) settings. Please set in the fax sending menu with the dialing way supported for telephone line.
Fax sending fault	The printer is poor in transmitting files	• Make one copy of original to check if the fax scanner could work normally. • Transmit with a higher resolution.
	A prompt of "Communication Failure" appears in printing the fax confirmation report	• The telephone line may suffer from temporary noise or electrostatic interference. Please send the fax again. • Please try to set as VoIP in compatibility and then send again. (Please see Chapter 10.3.3 for compatibility setting.) If the problem still occurs, please check the telephone line.

15. Menu Structure

With the help of menu structure of this printer on the panel menu, you may know and set various functions. The steps of printing are as follows:

1. Press "Menu" to enter the menu setting interface.
2. Press "▲" or "▼" to select "Information Report".
3. Press "OK" and then "▲" or "▼" to select "Print Menu Structure".
4. Press "OK" to print.

16. Product Specifications

Note: • Specification values vary slightly from printers with different models with different functions ,and product specifications vary from different countries and regions.

16.1. Overview of the Specifications

Product Size(W*D*H)	415mm*360mm*352mm
Product weight (exclusive of the random toner cartridge and packaging)	10Kg
Print Environment	Print temperature range:10-32 (5-35)℃
	Print humidity range:20%RH~80%RH
Power Voltage	110V Model: AC100~127V, 50Hz/60Hz,9A
	220V Model: AC220~240V, 50Hz/60Hz,4.5A
Noise (acoustic pressure level)	Print/scan: ≤52dB(A)
	Standby: ≤30dB(A)
	Mute mode: ≤46 dB (A)
Enter network standby time:	5 minutes
Power Consumption	Network standby: the model with wireless function: 2.366W the model without wireless function: 1.888W
	Standby: ≤ 45W
	Shutdown: ≤ 0.5W
Operating System	Microsoft Windows XP/ Windows Vista/ Windows 7/ Windows 8/ Windows 8.1/ Windows 10/ Windows Server 2003/ Windows Server 2008/ Windows Server 2012（32/64 Bit）
	macOS 10.8/10.9/10.10/10.11/10.12/10.13/10.14
	Ubuntu 14.04/ Ubuntu 16.04/ Ubuntu 18.04(32/64 Bit)
	Versions higher than iOS 7.0
Communication interface	Hi-speed USB 2.0
	IEEE802.3 10Base-T/100Base-Tx
	IEEE802.11b/g/n (support WPS)

16.2. Print Specifications

Print Speed	Please see Chapter 1.1.
Print Time of First Page	≤8.5sec
Print Language	Please see Chapter 1.1.

16.3. Copy Specifications

Copy Speed	30cpm(A4)/33cpm(Letter)
FCOT	Flatbed <10 seconds ADF <12 seconds
Maximum Pages for Successive Print	99 pages
Zoom Ratio	25%~400%
Other Copy Functions	"ID copy, Receipt copy, N-up copy, Clone copy"

16.4. Scan Specifications

Scan Type	Flatbed+ADF
Maximum Scan Size	Flatbed: 216×297mm ADF: 216×356 mm
Chromoscan	Yes
Scan Output Function	Scan to E-mail, PC, FTP and USB

G&G