Installation and user manual

Level M System

US

Contents

Preface 6
Copyright statement 6
Limited warranty 6

About this document 7
Contact information 7
Declaration of Conformity 7
Document details 8
About the system in this document 8
Terminology 8
How to use this document 8
Purpose of this document 8
Revision history 8
Related documents 8
Conventions 8
Illustrations 8
Units of measurement 8
Original language 9
Safety symbols used in this document 9

Safety 10
Intended use 10
Possible misuse 10
Approved personnel 10
Approved installation technician 10
Approved operator 10
Safety instructions 10
General safety instructions 10
Specific safety instructions 10
Disposal 11

Description 12
Description of the system 12
Overview of the parts of the system 13
Overview of the hydraulic pump 14
Overview of the controls 15
Overview of the touchscreen 15
Signs and buttons on the touchscreen 16
Signs and buttons used during the leveling procedures 17
Identification of the touchscreen 18
Schematic diagrams 19
Schematic diagram of the hydraulic leveling system (10 hoses) 19
Schematic diagram of the hydraulic leveling system (8 hoses) 20

Installation 21
Installation of the system 21
Install the hydraulic jacks 21

Install the hydraulic jacks to the chassis....22
Install the hydraulic pump....23
Connect the electric cable to the relay of the pump....24
Install the main unit....25
Connect the electric cables....26
Press the hydraulic hoses....26
Connect the hydraulic hoses....27
Install the wall frame of the touchscreen....28
Connect the hydraulic pump to the power supply....29
Pair the touchscreen....30
Put the system into operation....31
Fill the tank with oil....32
Bleed the system....32
Calibrate the leveling position....33
Calibrate the inclination position....34
Final check and delivery to the customer....35

Operation....36
Put the touchscreen into service for the first time....36
Set the language....36
Set the personal access code....37
Prepare for operation....37
Use the device in the fixed location....37
Use the device remotely....37
Put the device back into the wall frame....38
Start the touchscreen....38
Stop the touchscreen....38
Level the vehicle....38
Automatic leveling....39
Manual leveling....40
Retract the jacks....42
Automatic mode....42
Manual mode....42
Use the inclination function....43
Use the smartphone application....44
Download the app to your smartphone....44
Use the back-up buttons....44
Emergency operation....44

Maintenance....47
Maintenance schedule....47
Preventive maintenance....47
Maintenance for cold weather....48

Troubleshooting....49
General troubleshooting procedure....49
Error descriptions....49
Error mode....51
Troubleshooting table....51
Reset the touchscreen settings....51

Technical specifications.....53
Specifications of the hyraulic pump.....53
Specifications of the hydraulic jacks..... 54

PREFACE

Copyright statement

This document is protected by copyright, all rights are reserved. Under copyright laws, no part of this document may be copied, photocopied, reproduced, translated, or made into an electronic medium without written permission from E&P Hydraulics.

Limited warranty

- Read this document and understand the contents of this document fully, before you install or use the Level M System. E&P Hydraulics will not be liable for any direct, indirect, consequential or incidental damage that comes forth from the misuse of the product or not obeying the contents of this document.
- E&P Hydraulics reserves the right to change parts of the product and to make changes to the product and its document without prior notice given to any party, including the end user.
- E&P Hydraulics offers a 2-year warranty for the Level M System on the material.
- The Level M System comes with a registration number stated on the product. Make sure this number remains legible. This registration number is necessary when the servicing of the product must be done.
- The manufacturer's warranty is only valid if the product is purchased from an authorized E&P Hydraulics dealer.
- The guarantee expires if installation, modification, maintenance or repairs are made to the product or its components by a non E&P Hydraulics authorized dealer or installer.
- An appeal on the manufacturer's limited factory warranty is only eligible for adoption if an official E&P Hydraulics dealer or installer determines the material and/or manufacturing defect within the warranty period and the appeal to guarantee is done within two weeks after this determination.
- Repair and/or restoration work must not be started before the warranty claim is assigned by E&P Hydraulics and the planned repair is approved by E&P Hydraulics.
- A warranty claim must be made promptly upon discovery of the problem to E&P Hydraulics. Should this not be the case, E&P Hydraulics can reject the warranty claim, especially if the problem could be exacerbated by the late reporting, this is at the sole discretion of E&P Hydraulics.
- E&P Hydraulics is not liable for any form of physical, financial or physical direct or consequential damage caused by (parts of) the product, except where the damage concerns the product itself, as per the regulations provided in Directive 85/374/EEC.
- Excluded are (parts of) products which are used for commercial business, in the sale or on offer, or sold with defects, and/or products where the E&P Hydraulics identification signs have been deleted, removed or made unreadable.

ABOUT THIS DOCUMENT

Contact information

Retailer	
Name	E&P Hydraulics U.K. Ltd.
Address	Unit 10, Elder Court, Lions Drive Blackburn, Lancashire, BB1 2EQ England
Phone	+ 44 (0)1254 297785
E-mail	info@ep-hydraulics.co.uk
Website	www.ep-hydraulics.co.uk

Manufacturer	
E-mail	info@ep-hydraulics.com
Website	www.ep-hydraulics.nl

Declaration of Conformity

E&P HYDRAULICS

FCC ID
2A5AD-4100938
2A5AD-4100970

NOTICE:
This device complies with Part 15 of the FCC Rules [and contains license-exempt transmitter(s)/ receiver(s) that comply with Innovation, Science and Economic Development Canada's licence-exempt RSS standard(s)].
Operation is subject to the following two conditions:
this device may not cause harmful interference, and
this device must accept any interference received, including interference that may cause undesired operation.

NOTICE:
Changes or modifications made to this equipment not expressly approved by E&P Hydraulics U.K. Ltd may void the FCC authorization to operate this equipment.

NOTICE:
This equipment has been tested and found to comply with the limits for a Class B digital device, pursuant to Part 15 of the FCC Rules. These limits are designed to provide reasonable protection against harmful interference in a residential installation. This equipment generates, uses and can radiate radio frequency energy and, if not installed and used in accordance with the instructions, may cause harmful interference to radio communications. However, there is no guarantee that interference will not occur in a particular installation. If this equipment does cause harmful interference to radio or television reception, which can be determined by turning the equipment off and on, the user is encouraged to try to correct the interference by one or more of the following measures:

Reorient or relocate the receiving antenna.
Increase the separation between the equipment and receiver.
Connect the equipment into an outlet on a circuit different from that to which the receiver is connected.
Consult the dealer or an experienced radio/TV technician for help.

Document details

About the system in this document

The Level M System described in this document is a system that automatically or manually levels motorhomes.

Terminology

This document refers to the Level M System as 'system'.

How to use this document

1. Read this document to use the system correctly.
2. This document is a permanent component of the system, and it must stay with the module during the full life cycle of the module.

Purpose of this document

This document gives the description of the system, and the operation of the touchscreen or the smartphone application.

Revision history

Date	Revision number	Reason
January 2021	1.0	First published version
January 2022	2.0	Second published version
July 2022	3.0	Changes in the contact information, changes in the template, and the removal of typos

Related documents

Document name	Document code	Target group
Installation instructions hydraulic leveling support system	1808283_b	Approved installation technician
Operating instructions hydraulic Level System	4000894_a	Approved operator

Conventions

Illustrations

The illustrations are for reference only.
Differences between the illustrations and the system are possible but do not have an effect on the correct use of this document.

Units of measurement

In this manual SI units of measurement (metric system) as well as imperial units of measurement are used. The imperial units are between parentheses () or in separate columns in tables.

Original language

The original language of this document is American-English. All other available language versions of this document are translations of the original version.

Safety symbols used in this document

Symbol	Function	Description
	Warning	If you do not obey the instructions, death, serious personal injury or damage to the system can occur.
	Caution	If you do not obey the instructions, damage to the system is possible.
	Note	To give additional information.

SAFETY

Intended use

- The E&P Hydraulics system is intended to automatically or manually level motorhomes.
- Do not use the system for any other purpose than described in this document.

Possible misuse

Do not use the system to do maintenance under the vehicle.

Approved personnel

Approved installation technician

The term approved installation technician is specified here as the person who fully knows the system and its safe operation. The approved installation technician obeys all safety regulations. To install the system, E&P Hydraulics gives a training to the approved installation technician. Only after this training the installation technician is allowed to install the system.

Approved operator

The term approved operator is specified here as the end user of the system. The approved operator obeys all safety regulations. E&P Hydraulics gives a training to the approved operator. Only after this training the operator is allowed to use the system.

Safety instructions

General safety instructions

- Read the document before you operate the system.
- Only use the E&P Hydraulics system as intended.
- Make sure that the leveling system is installed by an approved installation technician that received training by E&P Hydraulics.
- Only approved installation technicians are permitted to repair the system.

Specific safety instructions

- Do not use the system to do other work below the vehicle, such as change the tires, do maintenance, or apply snow chains.
- Do not come near the vehicle when the system is in operation.
- Be careful with fluids from the system to prevent injury to the skin and eyes.
- Do not lift the vehicle too high. The vehicle can become unstable.
- Park the vehicle on a solid, non-slippery surface, and make sure that the surface is as level as possible. The location must be free of holes, waste and objects.
- Use a support plate or an E&P Hydraulics footplate cover below each jack to divide the weight if the vehicle is parked on very soft soil.
- Make sure that the vehicle is level after using the system. Walk around the vehicle to make sure that all hydraulic jacks are on the ground.
- Do not use the system when a person or animal is inside the vehicle.
- Do not spray the system with direct water jets, e.g. high-pressure cleaners.

Disposal

When you discard of the system or its parts:

- Obey local regulations;
- Obey instructions to sort the waste of the module;
- Obey safety and health instructions with regard to the module.

Prevent pollution. Be friendly to the environment.

DESCRIPTION

Description of the system

The Level M System is a hydraulic system used to automatically level a vehicle.
The E&P Hydraulics system consists of:

- A hydraulic pump that pumps hydraulic oil through a system of hydraulic hoses and four hydraulic jacks with foot plates that make the vehicle stable.
- A main unit that is installed on a central location in the vehicle.
- A built-in touchscreen to automatically or manually operate the system. The touchscreen can be taken out of the mounting frame and can be used as a remote control.
- Hoses and electric wirings.
- Individual brackets adapted to the vehicle.
- An optional Weight Measuring Module.

Overview of the parts of the system

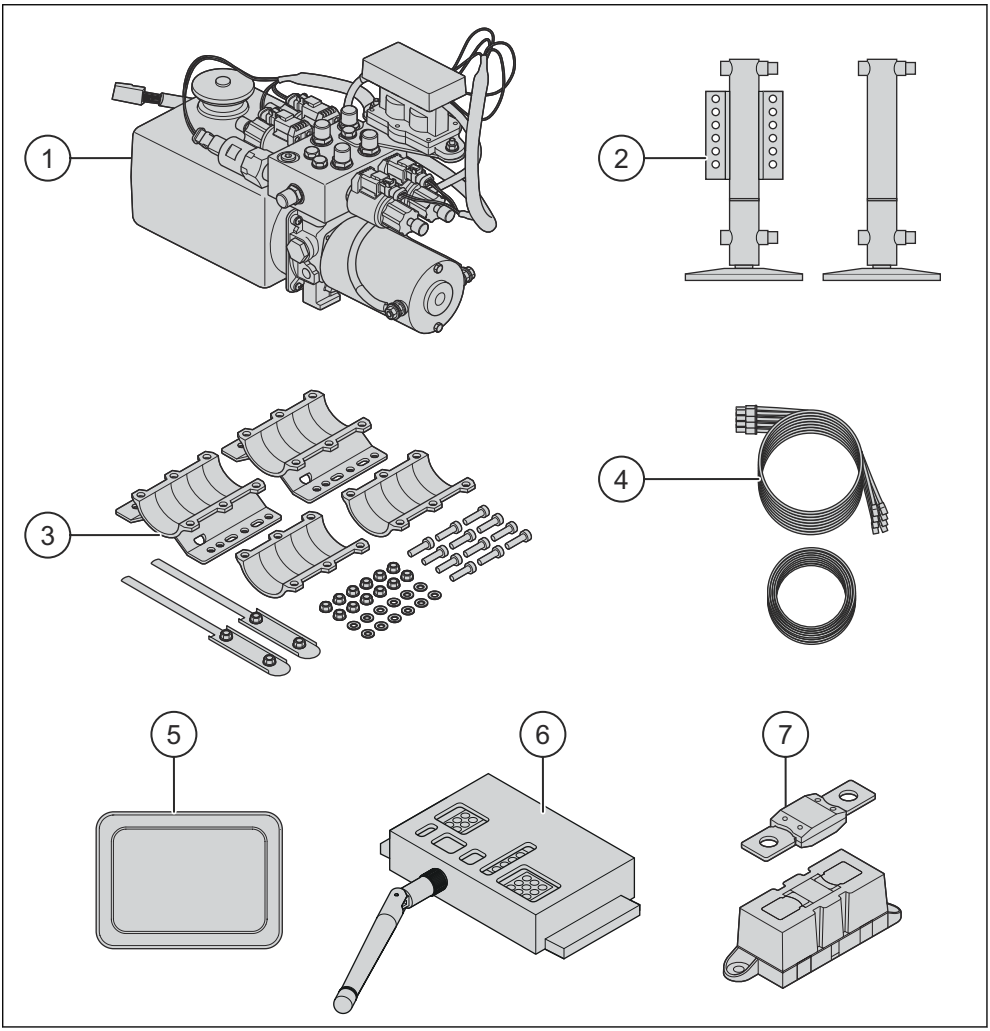

1	Hydraulic pump	5	Touchscreen
2	Hydraulic jacks	6	Main unit with antenna
3	Individual brackets adapted to the vehicle	7	Fuse and fuse holder
4	Hoses and electric wirings		

Overview of the hydraulic pump

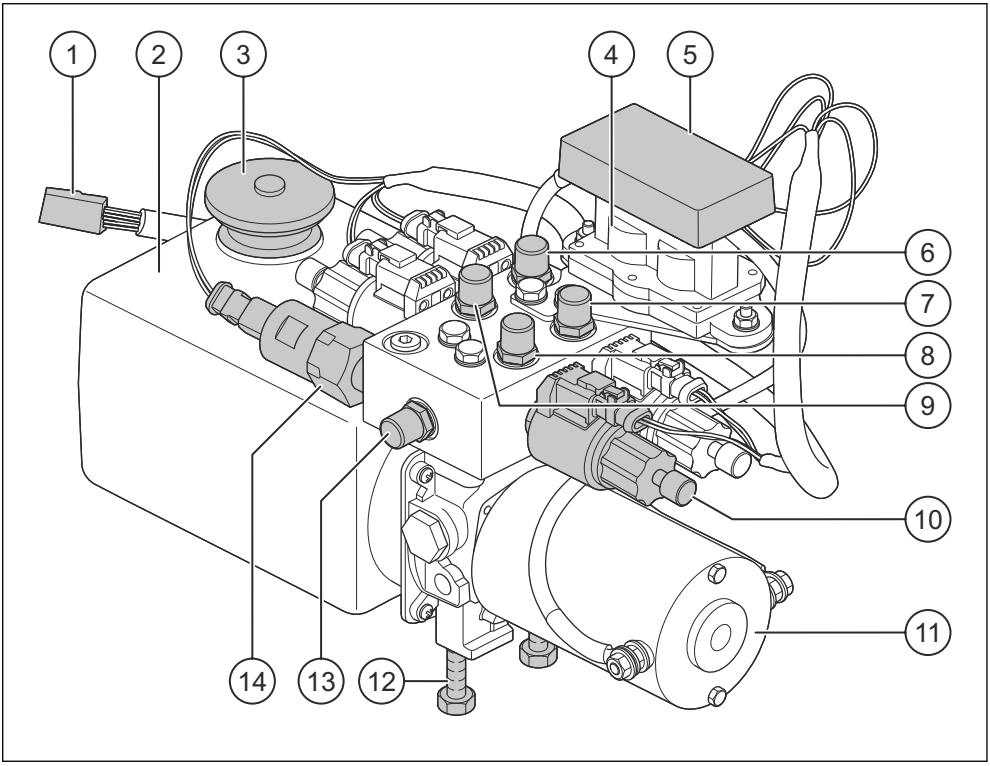

1	Connection to the main unit	8	Supply connection to the front left hydraulic jack
2	Oil reservoir	9	Supply connection to the rear left hydraulic jack
3	Filler cap	10	Valve (4x)
4	Relay	11	Electric motor
5	Protective cap	12	M10 mounting screws (2x)
6	Supply connection to the rear right hydraulic jack	13	Return connection
7	Supply connection to the front right hydraulic jack	14	Pressure switch

Overview of the controls

Overview of the touchscreen

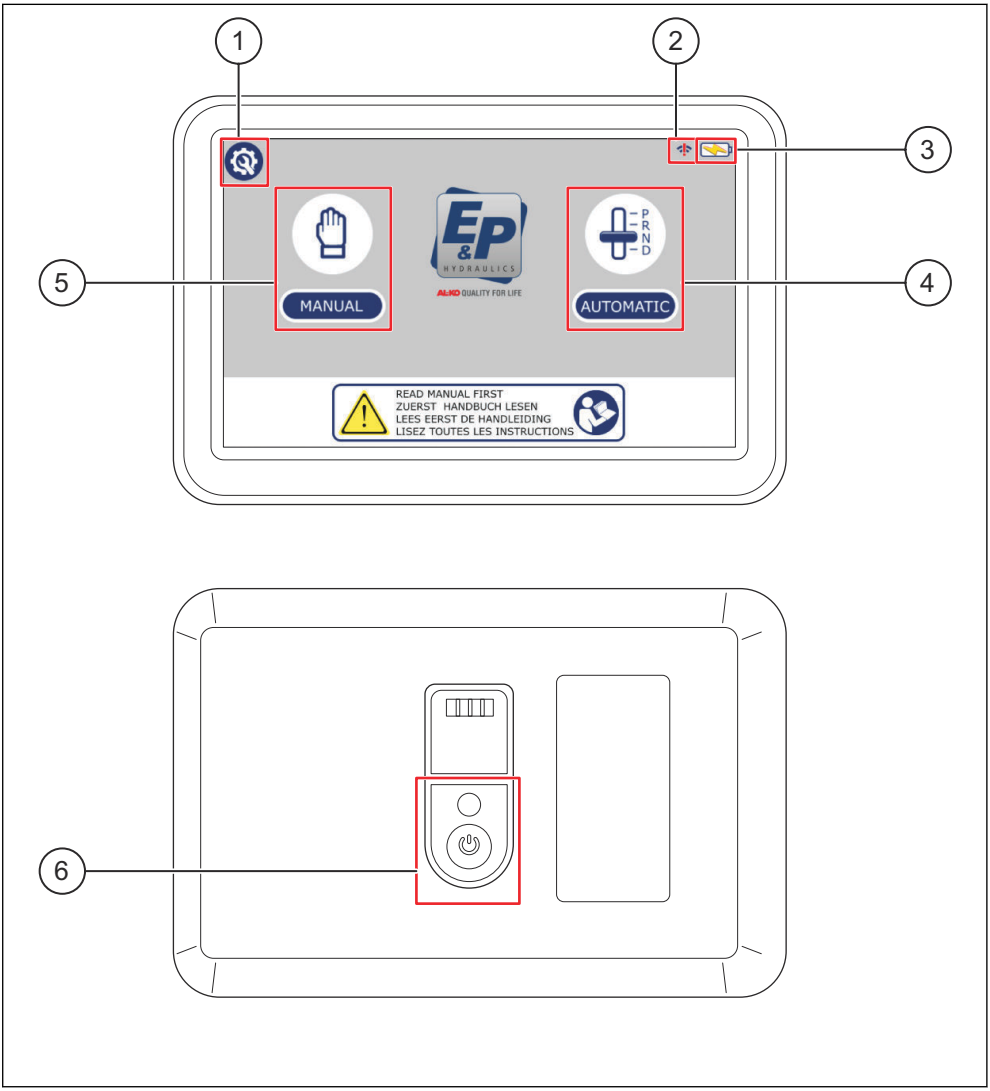

1	Settings button	4	Automatic leveling button
2	Signal indicator	5	Manual leveling button
3	Battery indicator	6	ON/OFF button

Signs and buttons on the touchscreen

Signs	Function	Description
	Settings button	To change the settings.
	Signal indicator	To show if there is a connection when the touchscreen is used as a remote controller. The sign shows a red exlamation mark when there is no connection between the touchscreen and the operation unit.
	Battery status indicator	To show that the battery is fully charged.
	Battery status indicator	To show that the battery is charging.
	Battery status indicator	To show that the battery is empty.
MANUAL	Manual leveling button	To start the manual leveling procedure.
P R N D AUTOMATIC	Automatic leveling button	To start the automatic leveling procedure.
	Notification	Read the document first.

Signs and buttons used during the leveling procedures

Sign	Name	Description
	Home button	To go to the home screen.
STOP	Stop button	To stop the automatic leveling procedure.
AUTO	Automatic leveling button	To automatically level the vehicle.
	Retract all jacks button	To automatically retract the jacks.
	Inclination button	To start the inclination function to empty the dirty-water tank.
	Left side button	To operate the extension of the left jacks during the manual leveling procedure.
	Rear side button	To operate the extension of the rear jacks during the manual leveling procedure.
	Front side button	To operate the extension of the front jacks during the manual leveling procedure.
	Right side button	To operate the extension of the right jacks during the manual leveling procedure.
	Position indicator	When the circle is gray, the jacks are in the withdrawn position.
	Position indicator	When the circle is yellow, the jacks are in operation.

Sign	Name	Description
	Position indicator	When the circle is red, the jacks are in the extended position.
	Spirit level	Tol show the position of the vehicle. If the blue circle is in the center of the spirit level, the vehicle is leveled.
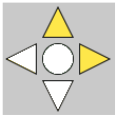	Level indicator	To show if the vehicle is level. The level indicator has 4 arrows and a circle in the middle. 1 or 2 arrows light up during the manual leveling procedure when the vehicle is not yet level. Use the level buttons on the sides where the arrows are yellow. The vehicle is leveled when there are no yellow arrows and the circle in the middle is green.

Identification of the touchscreen

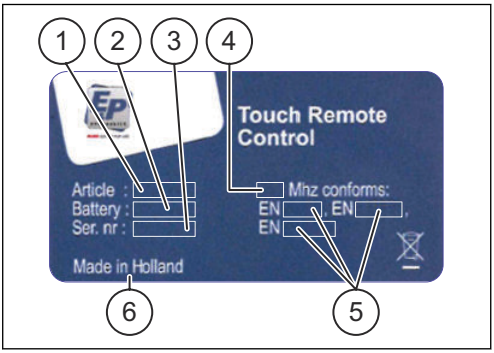

1 Article name
2 Battery
3 Serial number
4 Radio frequency
5 Safety standards
6 Origin

Reference	Name	Description
1	Article name	Specific identification name of the touchscreen
2	Battery	Specific battery used for the touchscreen
3	Serial number	Unique identification code of the touchscreen
4	Radio frequency	Ultra high radio frequency used by the touchscreen to communicate
5	Safety standards	Directives applicable to the touchscreen
6	Origin	Country of origin of the touchscreen

Schematic diagrams

Schematic diagram of the hydraulic leveling system (10 hoses)

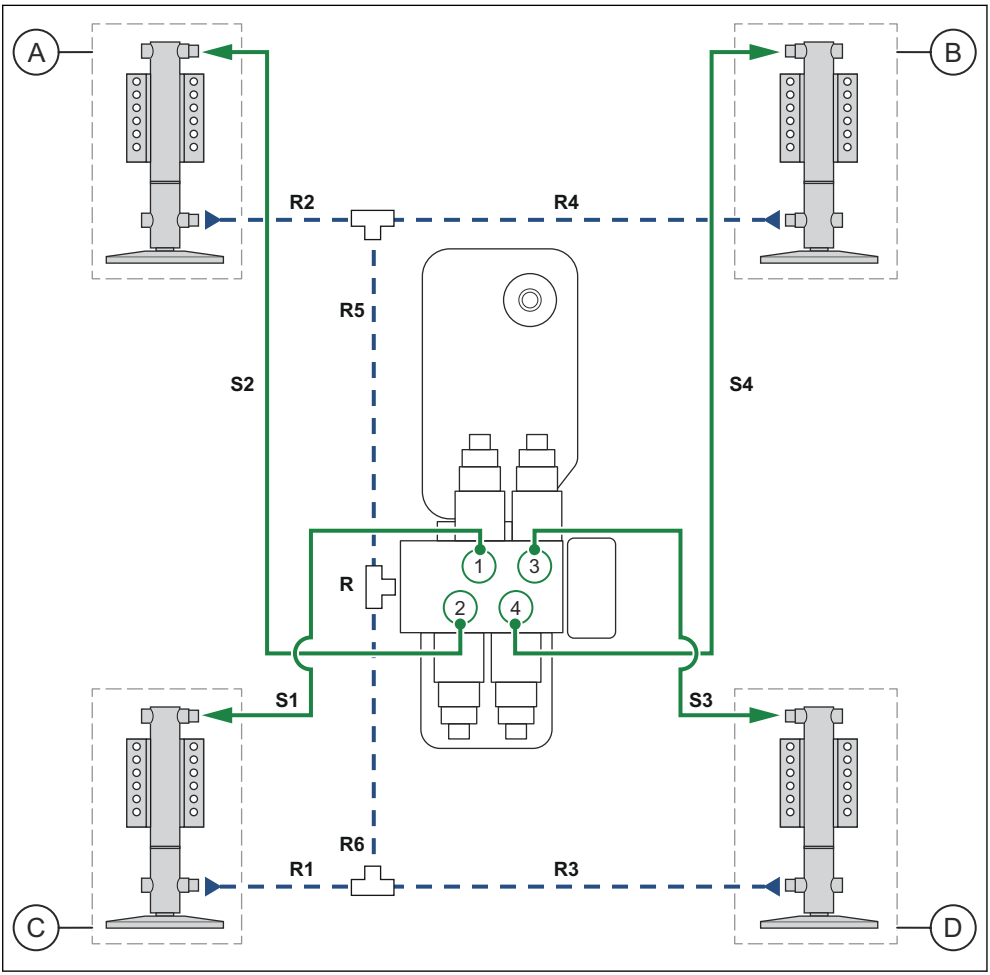

A	Front left jack	D	Rear right jack
B	Front right jack	S	Supply hose
C	Rear left jack	R	Return hose

Schematic diagram of the hydraulic leveling system (8 hoses)

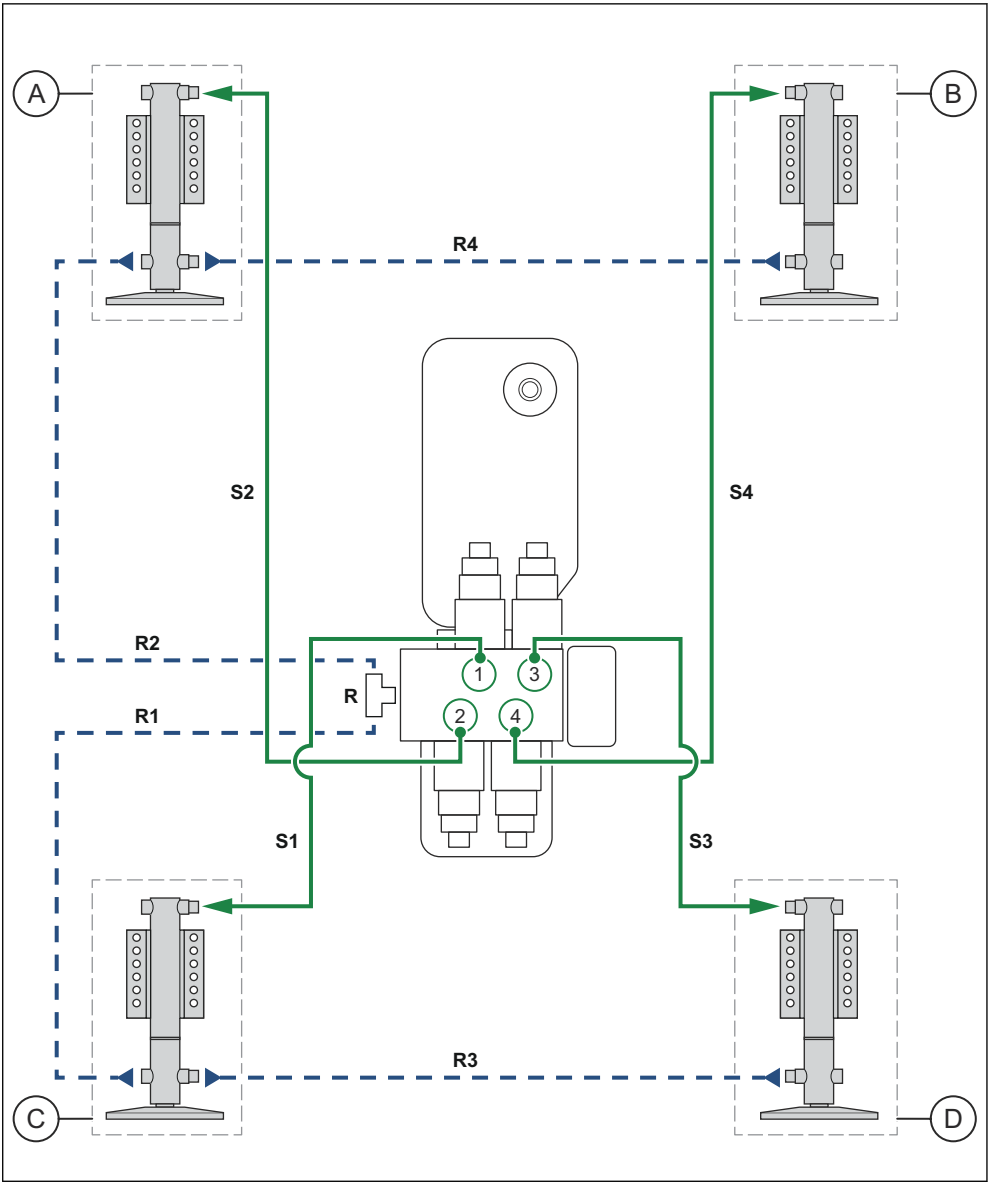

A	Front left jack	D	Rear right jack
B	Front right jack	S	Supply hose
C	Rear left jack	R	Return hose

INSTALLATION

Installation of the system

The installation procedures must be done by an approved installation technician. Refer to *Approved personnel*.
The table shows the procedures that are necessary for installation.

Caution: Do not change the sequence of the installation procedures, because it can cause irreparable damage to the system.

Step	Procedure
1	*Install the hydraulic jacks*
2	*Install the hydraulic pump*
3	*Connect the electric cable to the relay of the pump*
4	*Install the main unit*
5	*Connect the electric cables*
6	*Press the hydraulic hoses*
7	*Connect the hydraulic hoses*
8	*Install the wall frame of the touchscreen*
9	*Connect the hydraulic pump to the power supply*
10	*Pair the touchscreen*
11	*Put the system into operation*
12	*Fill the tank with oil*
13	*Bleed the system*
14	*Calibrate the leveling position*
15	*Calibrate the inclination position*
16	*Final check and delivery to the customer*

Install the hydraulic jacks

Warning:

- Do not underestimate the pressure which act on the system.
- Do not drill holes in the chassis unless it is approved by the E&P dealer.
- Only use the standard E&P mounting brackets.

If there are any uncertainties during installation, contact the E&P dealer. Refer to *Contact information*.

1. Find the correct installation locations for the hydraulic jacks.
   - The correct location is different for all vehicles, especially around the rear chassis.

   a. Install the jacks with as much distance between them as possible in the longitudinal direction.
   b. If possible, install the jacks outside the chassis. If this is not possible, refer to *Install the hydraulic jacks to the chassis*.
   c. Install the rear jacks behind the rear axle.
   d. Install the front jacks as close as possible to the front axle.
2. Make sure that the type of hydraulic jacks is correct. The jacks must be able to carry the maximum weight of the vehicle.
3. Make sure that the retracted jacks stay at least 18 centimeters (7.1 inches) from the ground.

> **Note:** Install the cylinders with the largest stroke as possible to get more lifting capacity.

4. Install the jacks with the correct bolts and nuts.
5. Tighten the bolts and nuts with the standard torque settings.
6. Make sure that the hydraulic jacks are installed vertically, and do not lean to the inner side, the outer side, the front, or the rear.
7. For some vehicles it is necessary to use a crossbeam to connect the left and the right jack for more stability. Refer to the E&P Hydraulics Pricelist.

Install the hydraulic jacks to the chassis

Sometimes it is not possible to install the hydraulic jacks outside the chassis. To install the hydraulic jacks to the chassis, you must drill holes in the chassis to install the brackets to the chassis. If there are any uncertainties during installation, contact the dealer. Refer to *Contact information*.

> **Note:**
> - Only use the standard E&P mounting brackets.
> - If the chassis is from AL-KO, it is possible to install the jacks to the chassis without a bracket.

1. Find the correct installation locations for the hydraulic jacks.
2. Hold the bracket tightly to the chassis.

3. Mark the positions to drill.
4. Drill the holes in the chassis.
5. Apply rust protection to the holes.
6. Install the brackets to the chassis with the bolts and nuts.
7. Tighten the bolts and nuts with the standard torque settings.
8. Make sure that the hydraulic jacks are installed vertically, and do not lean to the inner side, the outer side, the front, or the rear.

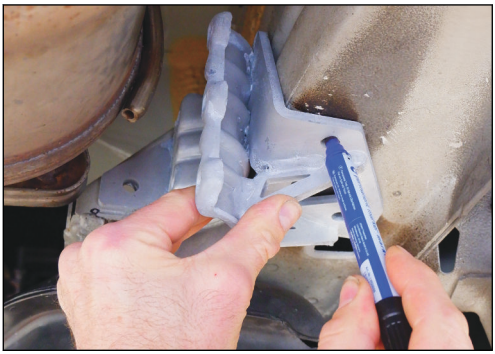

Install the hydraulic pump

1. Find a location for the pump where the user can get access to the emergency control with a drilling machine.
   - The pump can be installed in one of the storage spaces in the vehicle where it is easy to put pipes and wires through the floor.
   - The pump can be installed below the vehicle in a waterproof housing recommended by E&P Hydraulics.

2. If the pump is installed in one of the storage spaces, use the two metal mounting brackets:

Note:

- 4100892 mounting bracket power unit internal.
- 4100971 mounting bracket main unit (electronic contrul unit) internal.

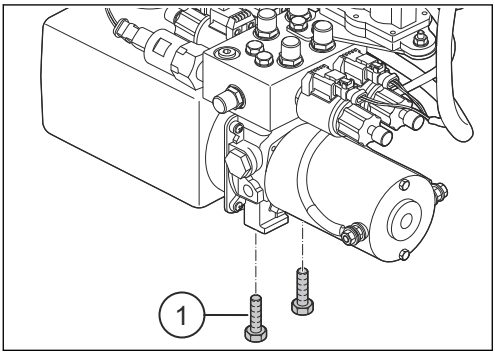

   a. Install the pump to the surface with a metal mounting bracket and the two M10 bolts (1). Use M10 x 12 mm bolts.

Warning: The maximum length of each bolt hole in the pump is 15 mm. Make sure that the M10 bolts are not too long to prevent damage to the pump.

   b. Install the second mounting bracket to the surface under the tank of the pump to make sure that the pump is in a flat position.

3. If the pump is installed below the vehicle, use the metal housing:
   a. Install the pump to the bottom of the housing with the two M10 bolts (1).
   b. Make sure that the pump is in a level position. The bottom of the plastic oil tank must be flat on the surface.
   c. Apply adhesive to the housing of the pump.
   d. Attach the housing tightly to the bottom of the vehicle with screws.

Connect the electric cable to the relay of the pump

1. Make sure that you have a cable with a minimum cross section of 25 mm^2 (0.05 in^2), and a maximum length of 6 meters (19.7 feet).

Caution: If the cable thickness is not sufficient, the system can malfunction.

2. If installed, open the metal housing of the pump.

3. Connect the red cable from the fuse holder to the + connection (1) on the relay of the hydraulic pump.
4. Connect the black cable from the chassis of the vehicle to the - connection (2) on the relay of the hydraulic pump.

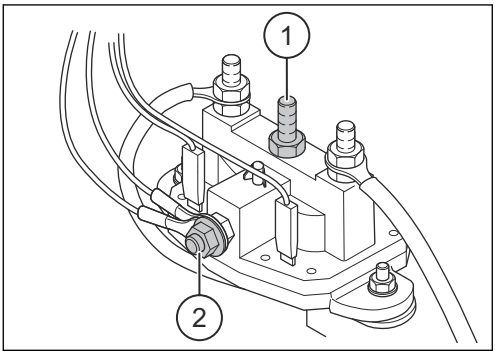

Warning: Do not connect the hydraulic pump to the battery yet.

Install the main unit

1. Find a location to install the main unit (1).

   ✓ The best position for the main unit is adjacent to the hydraulic pump, in the longitudinal direction of the vehicle.

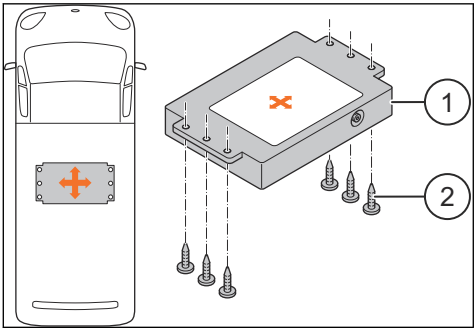

Warning: Use the special housing (4100791) for the main unit if it is installed outside the vehicle.

Note: The connector plugs must point down. Refer to the sticker on the main unit.

2. Make sure that the position of the main unit is correct. Refer to the sticker on the main unit for the correct orientation.
3. Make sure that the main unit is in a level position in relation to the chassis.
4. Attach the main unit to the surface with six screws (2).
5. Make sure that the main unit is fully stable.

Warning: The main unit must be fully stable to prevent malfunctions.

Connect the electric cables

Warning: Do not connect the system to power supply during this procedure.

1. Connect the cable with the 9-pin plug from the hydraulic pump to the connection (1) on the main unit.
2. Connect the 2-pin cable with the 6-pin plug to the connection (2) on the main unit.
3. Connect the other side of the 2-pin cable with the white wire to the hand brake signal and with the red wire to terminal 15 of the ignition.
4. Connect the cable with the 4-pin plug from the frame of the touchscreen to the connection (3) on the main unit.
5. Put the cables in position, but do not connect the system to power supply.

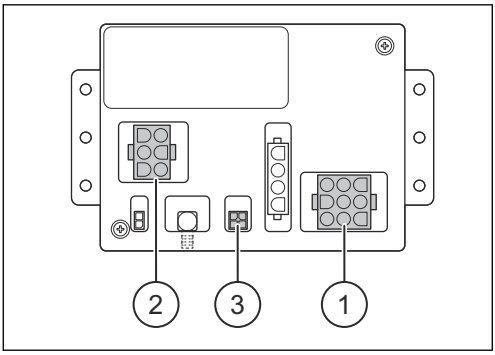

Press the hydraulic hoses

Before you press the hydraulic hoses, make sure that you have:

- A hydraulic hose press recommended by E&P Hydraulics. Make sure that the press is calibrated before use.
- Hydraulic hose materials specified by E&P Hydraulics.
- Hydraulic hose couplings specified by E&P Hydraulics.
- A calibrated caliper.

1. Press the hoses to 14.4 mm (0.6 in) (X).
2. Use the calibrated caliper to measure the hose.

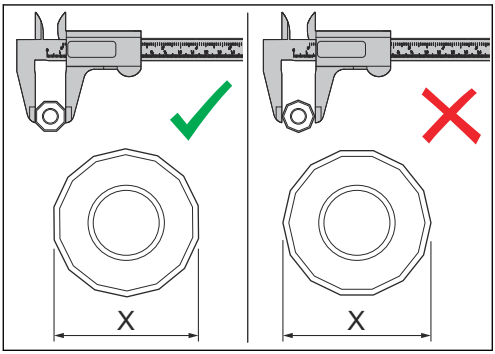

Note:

- Make sure that you measure on the flat part of the hose, and not on the ridge.
- The correct dimension of the hose connector is 14.4 mm ± 0.1 mm (0.57 in ± 0.004 in).

Connect the hydraulic hoses

Warning: Do not underestimate the pressure which act on the hydraulic hoses. The hoses must endure a minimum of 220 bar.

1. Route the hydraulic hoses from the pump to the hydraulic jacks. Refer to *Schematic diagrams*.

   Note: Make sure that the length of the hydraulic hoses is correct. Take the heat sources (e.g. the exhaust) and the moving parts (e.g. laminated suspension springs and the hand brake cable) into account. E&P Hydraulics offers specific heat shields.

2. Connect the supply hoses:
   a. Connect the supply hoses to the top connections of the hydraulic jacks.
   b. Connect the other ends of the supply hoses to the correct connections on the hydraulic pump. Refer to *Schematic diagrams* and *Overview of the hydraulic pump*.
3. Connect the return hoses:
   a. Connect the return hoses to the bottom connections of the hydraulic jacks.
   b. Connect the other ends of the return hoses to the return connection on the hydraulic pump. Refer to *Schematic diagrams* and *Overview of the hydraulic pump*.

   Note: It is possible to interconnect the return hoses. Refer to *Schematic diagram of the hydraulic leveling system (8 hoses)*.

4. Cover the hydraulic hoses with a sheath hose if there are any sharp edges or if the hoses are close to heat sources.

5. Conceal the hoses correctly. Make sure there is no risk of wear or leakage.
6. Attach the hoses and make sure that they cannot rub against other parts.
7. Make sure that all hoses are connected correctly before you put them in operation.

Note: Use the correct torque setting (30-45 Nm).

Install the wall frame of the touchscreen

Note: This procedure is only applicable to a system with a touchscreen.

This procedure describes how to install the wall frame of the touchscreen in a cut-out in the wall.

Note: It is also possible to install the wall frame to the wall without a cut-out:

- Install the supplied adapter to the wall with 4 screws.

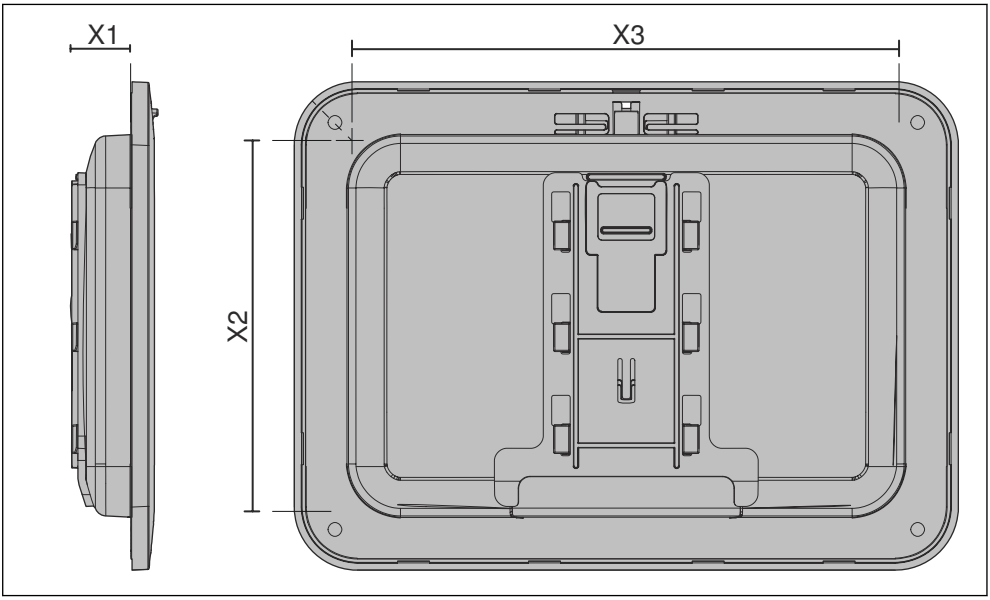

Distance	Specification (metric units)	Specification (imperial units)
X1	min. 14.6 mm	min. 0.57 in
X2	min. 94.4 mm, max. 97.4 mm	min. 3.72 in, max. 3.83 in
X3	min. 137.6 mm, max. 140.6 mm	min. 5.42 in, max. 5.54 in

1. Cut a hole in the wall. Use the correct dimensions from the table.
2. Put the wall frame in the cut-out.
3. Make sure that the position of the wall frame is correct.

Note: The gap between the wall frame and the wall must not be more than 1.5 mm (0.06 in).

4. Connect the 4-pin cable.
5. Use the four screws to attach the wall frame to the wall.
6. Click the covering part of the wall frame onto the wall frame.

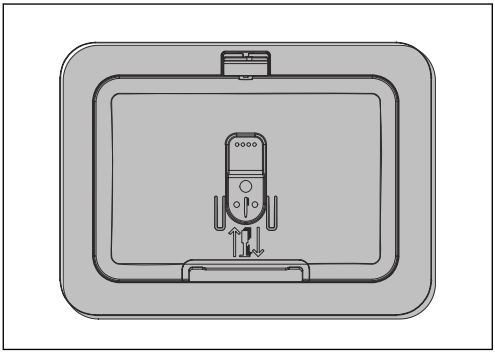

Connect the hydraulic pump to the power supply

1. Make sure that the previous installation procedures have been done.
2. Connect the power cable that is connected to the relay of the hydraulic pump to the accessory battery or to the start battery of the vehicle.

Note:

- Refer to the document of the vehicle to see what is recommended and allowed.
- If the vehicle has a 24 volt system, E&P Hydraulics supplies the leveling system with a 24 volt DC motor.

✓ An audio signal sounds when the hydraulic pump is connected to the battery.

Pair the touchscreen

Note:

- The pair function only works if the device is used as a remote. Refer to *Use the device remotely*.
- To use the touchscreen remotely, the version number of the main unit must be 3.14 or higher. If not, the touchscreen will not work. Contact the manufacturer or the retailer. Refer to *Contact information*.

1. Take the touchscreen out of the wall frame and start it. Refer to *Start the touchscreen*.
2. Make sure that the device has been put into service. Refer to *Put the touchscreen into service for the first time*.
3. Push the settings button (1).

   ✓ A pop-up keypad shows.

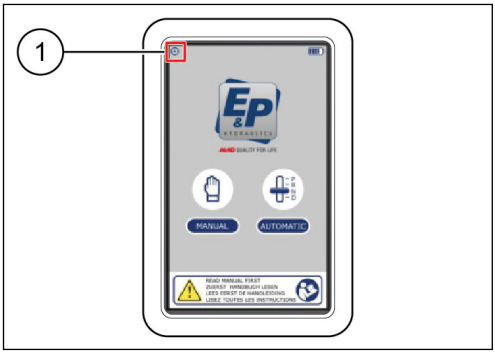

4. Enter the personal access code and push *OK* (1).
   - The factory setting personal access code is *0000*.

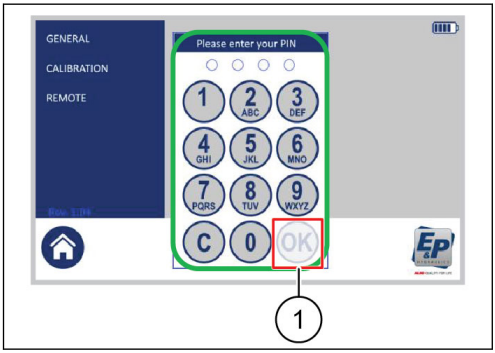

5. Push *REMOTE* (1).
6. Push *PAIR REMOTE* (2).

   A pop-up box shows the text: *Pair touchscreen with main unit. Push start and switch on the main unit. Do you wish to proceed?*

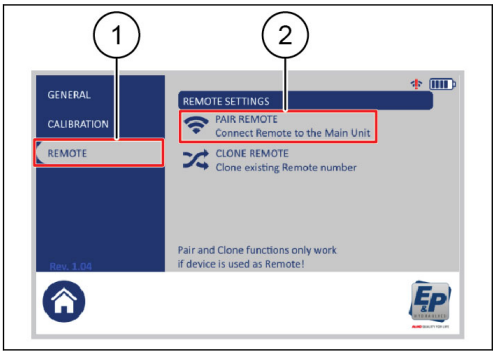

7. Remove the fuse out of the cable assembly from the hydraulic leveling system or disconnect the 9-pin cable plug from the main unit.
8. Push *START* on the pop-up box to continue with the procedure.
9. Reconnect the fuse or 9-pin cable to start the system.

   A pop-up box shows the text: *Pairing done*.

> **Note:** If the pop-up box does not show in less than 30 seconds, the procedure must be done again.

10. Push *OK*.

Put the system into operation

1. Make sure that the hydraulic jacks can complete their stroke, but cannot touch the ground.
2. Bleed the system. Refer to *Bleed the system*.
3. Make sure that the two left hydraulic jacks are extended at the same time when the left side button is pushed in manual mode.

> **Note:** If the two hydraulic jacks do not extend, the hydraulic hoses are not connected correctly. Refer to *Schematic diagrams* and *Connect the hydraulic hoses*.

4. Make sure that the parking brake protection function works:
   a. Extend the hydraulic jacks.
   b. Set the leveling system to OFF.
   c. Set the ignition of the vehicle to ON.
   d. Put your foot on the brake and release the handbrake.
      ✓ An audio signal sounds and the hydraulic jacks are retracted.

Fill the tank with oil

1. Do a check on the oil level when the jacks are fully retracted.
2. Remove the filler cap (1) from the oil tank.
3. Fill the tank with oil, to 2 centimeters (0.8 inch) (X) below the edge.

> **Note:** Use ATF Dexron III or Mercon 5 oil.

4. Install the filler cap (1).

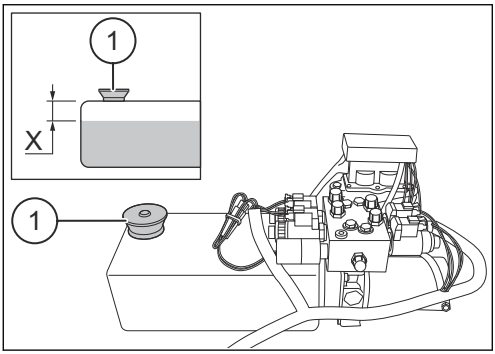

Bleed the system

1. On the touchscreen, push *MANUAL* (1).

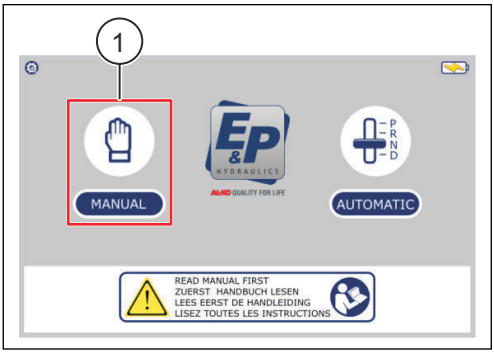

2. Push and hold the retract all jacks button (1) until there is pressure on the system and the pump stops.

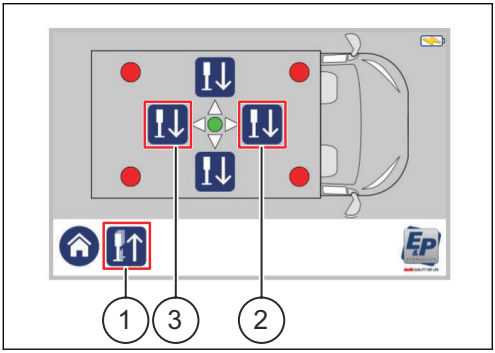

3. Fill the oil tank. Refer to *Fill the tank with oil*.

> **Warning:**
> - Make sure that you do not fill the oil tank to the top when the jacks are extended.
> - If there is too much foam in the oil reservoir, wait until the foam has disappeared.

4. Fully extend the front jacks with the front side button (2).
5. Fully extend the rear jacks with the rear side button (3).
6. Retract the jacks with the retract all jacks button (1).
7. Wait until the foam in the oil reservoir has disappeared.
8. Do step 4 to 7 four more times.

   ✓ The bleeding procedure is now completed.

9. Make sure that the oil level is sufficient. If necessary, fill the oil tank. Refer to *Fill the tank with oil*.

Calibrate the leveling position

> **Note:** This procedure is only applicable to a system with a touchscreen.

1. Put the vehicle on a flat surface.
2. Put a spirit level in the center of the vehicle and do the manual leveling procedure. Refer to *Manual leveling*.
3. On the touch screen, push the home button to go back to the start screen.
4. Push the settings button (1).

   ✓ A pop-up keypad shows.

5. Enter the personal access code and push *OK*.
   - The factory setting personal access code is *0000*.

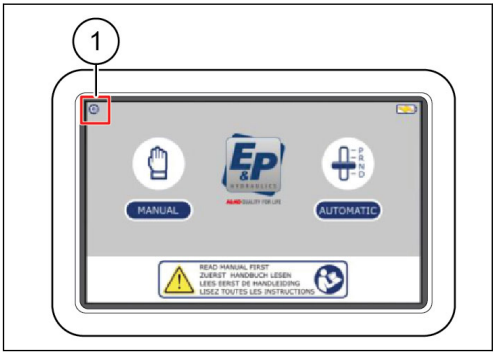

6. Push *CALIBRATION* (1).
7. Push *LEVEL* (2) or *LEVEL + VB* (3).
   - Push *LEVEL* (2) to save the new calibration point if the vehicle does not have a VB-air suspension set installed.
   - Push *LEVEL + VB* (3) to save the new calibration point if the vehicle has a VB-air suspension set installed and has a EP/VB cable.

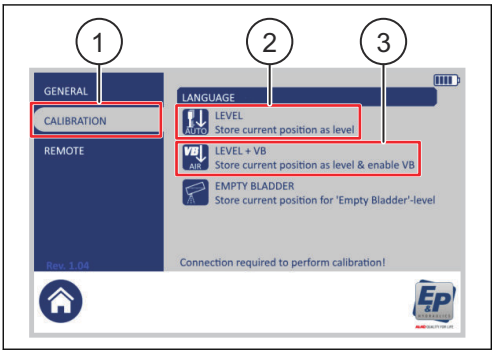

   A pop-up box shows the text: *Store the current position to be used as 'level'. This action cannot be reversed. Do you wish to proceed?*
8. Push *YES*.

   A pop-up box shows. When the procedure is done, the text *Calibration done* shows.
9. Push *OK*.

Calibrate the inclination position

1. Do the manual leveling procedure to put the vehicle in the necessary inclination position. Refer to *Manual leveling*.
2. On the touchscreen, push the home button to go back to the start screen.
3. Push the configuration button (1).

   ✓ A pop-up keypad shows.
4. Enter the personal access code and push *OK*.

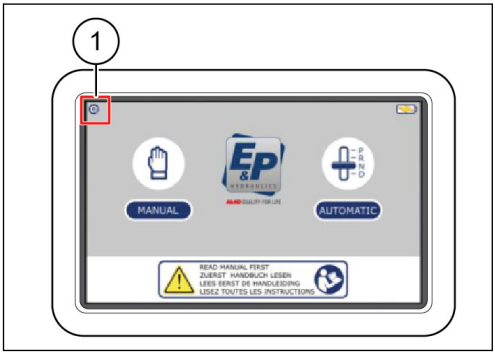

5. Push *CALIBRATION*.
6. Push *EMPTY BLADDER* (1).

   A pop-up box shows the text: *Store the current position for 'empty bladder'. This action is irreversible. Do you wish to proceed?*
7. Push *YES*.

   A pop-up box shows. When the procedure is done, it shows the text: *Calibration done*.
8. Push *OK*.

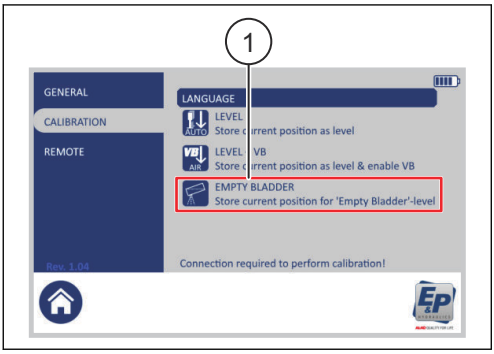

Final check and delivery to the customer

1. Make sure that all connections are correct. Refer to *Schematic diagrams*.
2. Make sure that all transits for cables, hydraulic hoses, wiring, etc. are carefully sealed.

> **Note:** We recommend to put an anti-corrosive agent (e.g. tectyle) on the jacks, including the hose connections.

3. Make sure that all functions operate correctly (automatic leveling, manual leveling, retract the jacks).
4. Make sure that you give the customer the instruction manual.
5. Show all functions of the level system to the customer.

OPERATION

Put the touchscreen into service for the first time

When you use the E&P Hydraulics touchscreen for the first time, you can select your personal language and set the personal access code. These procedures have been done at your dealer or installer. It is possible to change these settings.

Set the language

1. On the touchscreen, push the settings button (1).

   ✓ A pop-up keypad shows.

2. Enter the personal access code and push *OK*.

   - The factory setting personal access code is *0000*.

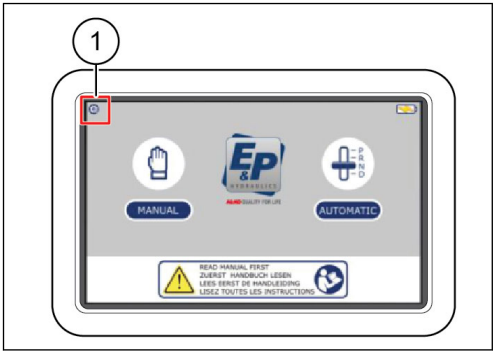

3. Push *GENERAL* (1).
4. Push *LANGUAGE* (2).
5. Select a language.

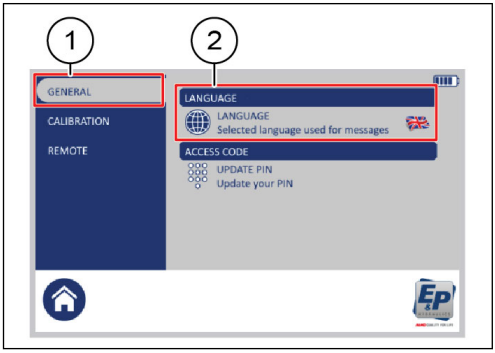

Set the personal access code

1. On the touchscreen, push the settings button (1).

   ✓ A pop-up keypad shows.

2. Enter the personal access code and push *OK*.

   - The factory setting personal access code is *0000*.

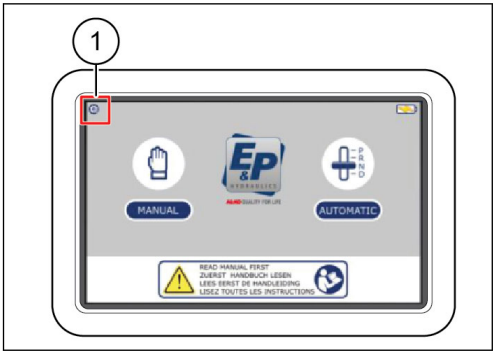

3. Push *GENERAL* (1).
4. Push *UPDATE PIN* (2).
5. Enter the new personal access code and push *OK*.

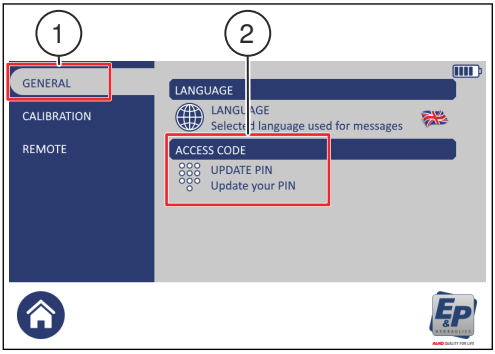

Prepare for operation

Use the device in the fixed location

1. Start the touchscreen. Refer to *Start the touchscreen*.

   The touchscreen is prepared for operation in horizontal orientation.

Use the device remotely

1. Push the release slider (1) upwards.
2. Take the touchscreen out of the frame.

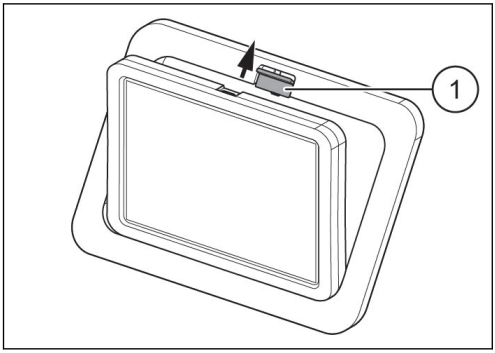

3. Push the ON/OFF button (1) on the back of the touchscreen.

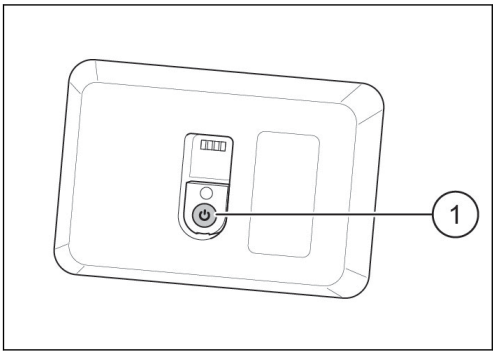

Put the device back into the wall frame

1. Put the touchscreen over the vertical rib at the bottom of the wall frame.
2. Push the touchscreen (1) into the mounting frame.

   The touchscreen is locked in the wall frame when you hear a click from the release slider.

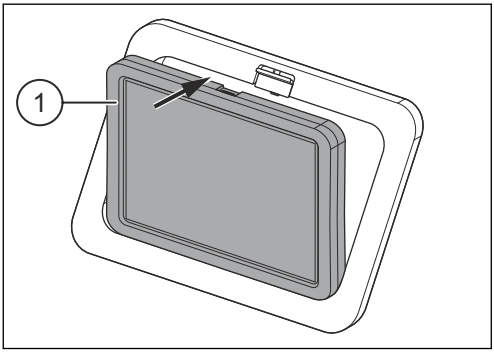

Start the touchscreen

The touchscreen can be started in two ways:

- To start the touchscreen in the fixed location, touch the screen.
- To start the touchscreen when it is used remotely, push the ON/OFF button at the back of the touchscreen.

Stop the touchscreen

When not used, the touchscreen automatically switches OFF after 30 seconds.

Level the vehicle

Read the safety instructions before you start the leveling procedure. Refer to *Safety instructions*.
It is also possible to level the vehicle with the E&P Hydraulics smartphone application. Refer to *Use the smartphone application*.

Automatic leveling

Make sure that the ignition of the vehicle is set to ON before you start the procedure.
If necessary, use support plates below the footplates of the jacks on the lower side to compensate large height differences.

Warning: Do not use the leveling system when a person or animal is inside the vehicle.

Caution: Make sure that the handbrake of the vehicle is engaged before you start the procedure.

1. On the touchscreen, push *AUTOMATIC* (1).

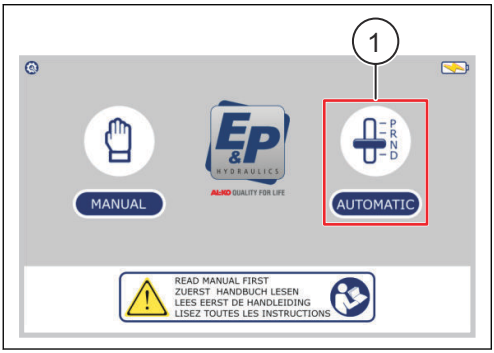

2. Push the *AUTO* button (1).

   ✓ The hydraulic leveling procedure starts.

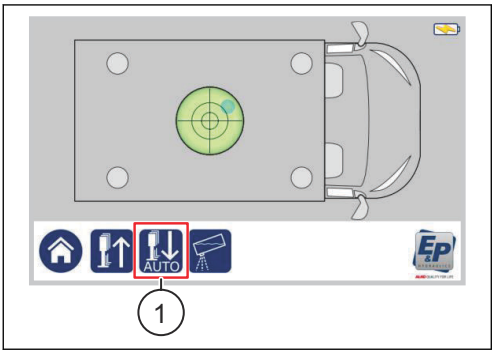

Note: To stop the procedure, push the stop button (2). Before the procedure can be started again, the retract all jacks button must be pushed.

The circles (3) indicate the hydraulic jacks. When a circle is grey, it means the jack is in withdrawn position. When the circle is yellow, it means the jack is in operation. When the circle is red, the jack is in extended position.
In the spirit level (4) you can see a blue circle (5). When the blue circle is in the middle of the spirit level, the vehicle is leveled.

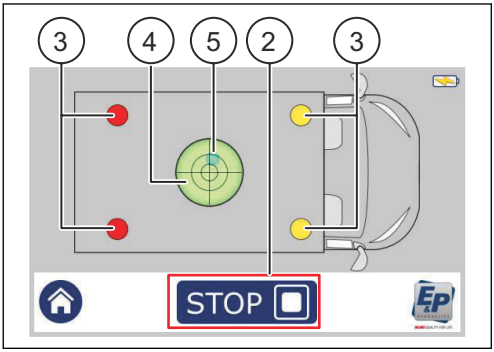

Manual leveling

Caution: Make sure that the handbrake of the vehicle is engaged before you start the procedure.

Caution: If necessary, use support plates below the footplates of the jacks on the lower side to compensate large height differences.

1. On the touchscreen, push *MANUAL* (1).

   ✓ A new screen shows. It depends on the position of the vehicle if 1 or 2 arrows light up.

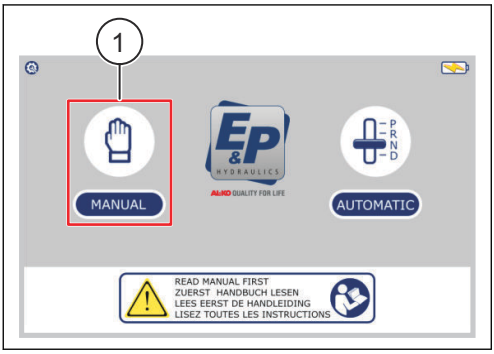

2. Push and hold the front side button (1) until the front jacks touch the ground.

   Caution: Always level the vehicle at the front side first.

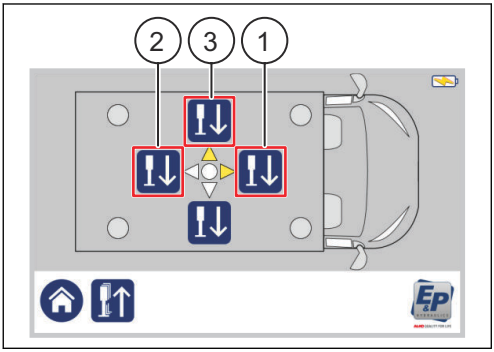

3. Hold the button a while longer to make sure that the vehicle is lifted approximately 3 centimeters (1.2 inch) higher on the front side.
4. Push and hold the rear side button (2) until the rear jacks touch the ground.
5. Hold the button a while longer to make sure that the vehicle is lifted approximately 3 centimeters (1.2 inch) higher on the rear side.

   ✓ One or two yellow arrows light up in the middle of the screen (3). The arrows show which sides must be leveled. If the circle in the middle lights up green, the vehicle is level.

6. Use the level buttons on the sides where the arrows are yellow.
   - If only one arrow is yellow, push the level button on that side until the leveling system automatically stops.
   - If two arrows are yellow, take turns between the two level buttons until the leveling system automatically stops. Do not level one side first.

   ✓ The vehicle is level when there are no yellow arrows and the circle in the middle is green (1).

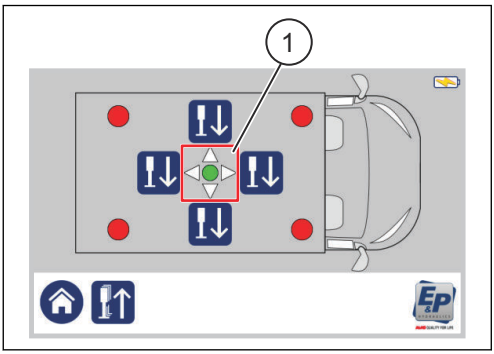

Retract the jacks

It is also possible to retract the jacks with the E&P Hydraulics smartphone application. Refer to *Use the smartphone application*.

Automatic mode

1. On the touchscreen, push *AUTOMATIC* (1).

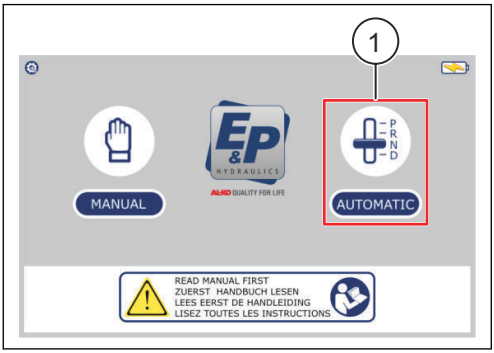

2. Push the retract all jacks button (1) one time.

   ✓ The hydraulic pump starts to retract the jacks.

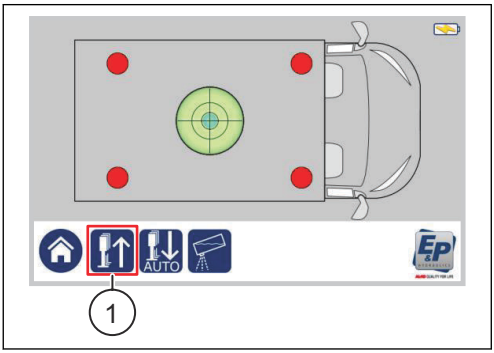

To cancel the procedure, push the stop button.

Manual mode

1. On the touchscreen, push *MANUAL* (1).

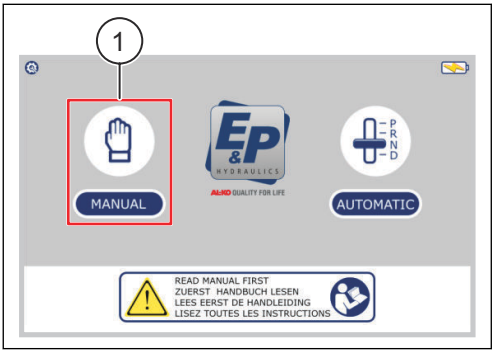

2. Push and hold the retract all jacks button (1) until the hydraulic pump stops.

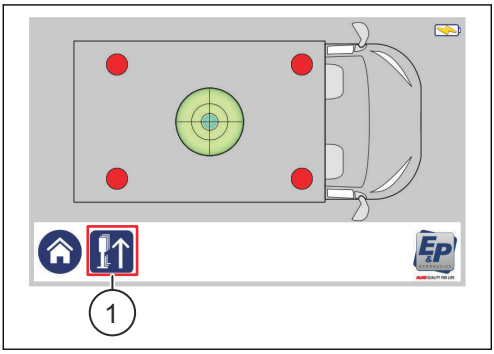

Use the inclination function

Use the inclination function to empty the dirty-water tank. There is a maximum inclination so the wheels do not lift off the ground. The inclination function is available for the left side and the right side of the vehicle. For the front side or the rear side, the settings must be added by the dealer.

1. On the touchscreen, push *AUTOMATIC* (1).

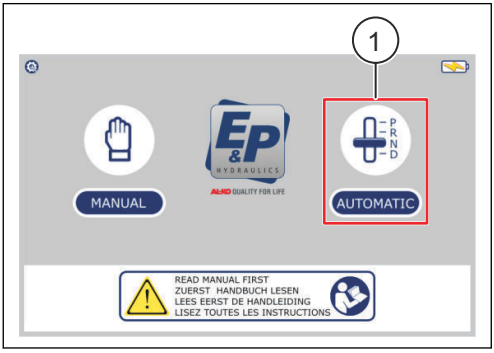

2. Push the inclination button (1).

   ✓ The vehicle moves to the position as programmed by your dealer.

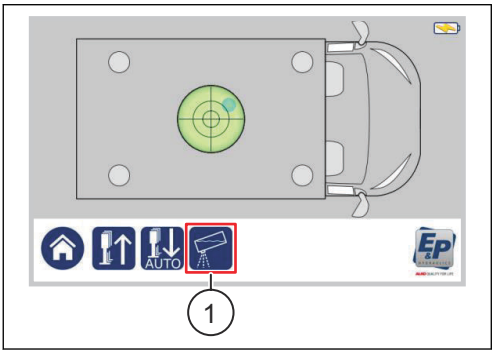

Use the smartphone application

Download the app to your smartphone

- Search for *E&P Hydraulics by Alko* in the Google Play Store (Android) or the App Store (iOS), or scan the QR-code.
- Install the app on your smartphone.

Android iOS

Use the back-up buttons

If there is a problem with the touchscreen, the leveling system can also be operated with a pen and the two small holes in the wall frame.

- Push a pen in the hole (1) to automatically retract the jacks.
- Push a pen in the hole (2) to automatically level the vehicle.

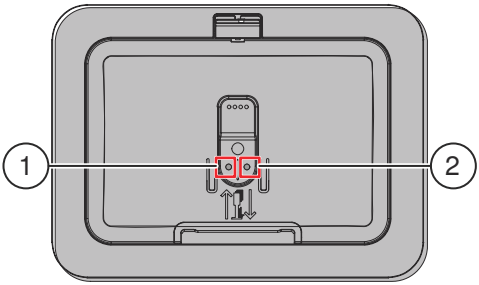

Emergency operation

If there is a failure in the system, the leveling system can also be operated manually or with a power tool.

Warning: Be careful during this procedure when you open and close the valve.

Note: It depends on the type of hydraulic pump if the valves must be adjusted by hand or with the supplied hex key.

1. Carefully turn the four valves on the pump clockwise, by hand or with the supplied hex key, until the valves are fully open.

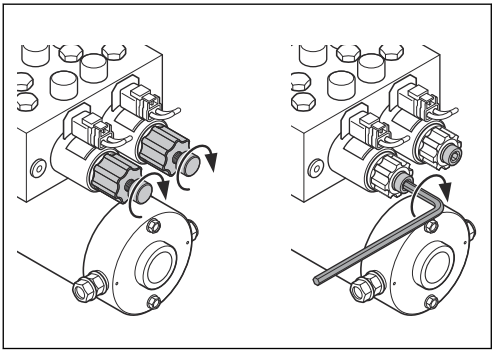

2. Remove the protective label on the front side of the electric motor to see the coupling.

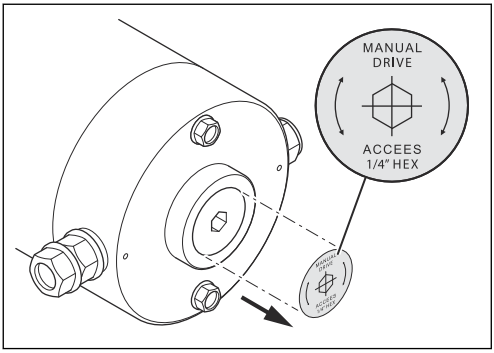

3. To retract all the jacks, put the supplied hexagon-bit (1/4" HEX) in the coupling and turn it counterclockwise with an auxiliary tool.

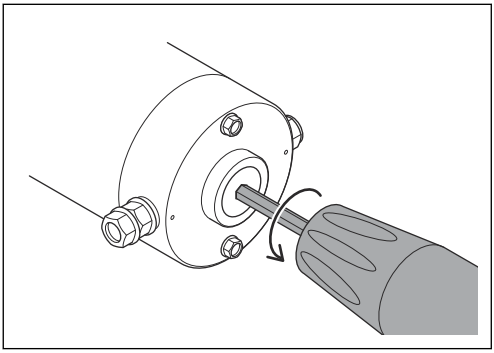

4. Carefully turn the four valves on the pump counterclockwise to the initial position.

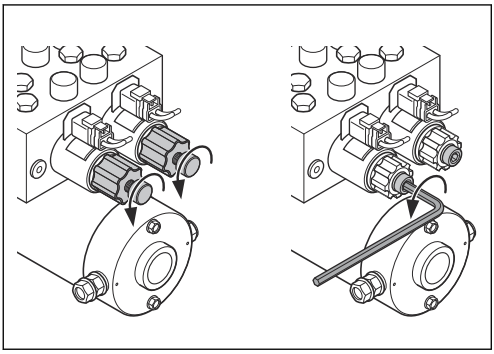

MAINTENANCE

Maintenance schedule

Warning: Before maintenance, approved personnel must put the front axles and rear axles of the vehicle on suitable axle stands.

The E&P Hydraulics system does not have parts that must receive periodic maintenance. Visual checks, functional checks and cleaning must be done during the annual vehicle service. When parts are disassembled, the warranty becomes invalid. If necessary, parts can be replaced or repaired by your E&P Hydraulics dealer/installer.

Preventive maintenance

Part or adjustment	Frequency	Procedure
Cylinder surfaces and gaskets	Regularly	Make sure that the parts are clean, and do a check for wear, corrosion, oil leakage and damages.
Connection components and screws		
Power unit and hose fittings		
Tank vent		
Hydraulic jacks and foot plates		
Hydraulic oil level	Regularly	Do a check on the oil level when the jacks are fully retracted. The oil level must be 2 centimeters (0.8 inch) below the edge. If necessary, fill the tank when the jacks are fully retracted.
		Make sure that the quality of the hydraulic oil is good. If necessary, replace the hydraulic oil.
		Caution: Only use unused ATF (Automatic Transmission Fluid) transmission oil. E&P Hydraulics recommends ATF with Dexron III or Mercon 5, or a mixture of the two.
		Caution: With cold weather conditions, use a special type of oil for low temperatures. Speak to E&P Hydraulics or a recognized dealer before using a different type of oil.

Part or adjustment	Frequency	Procedure
Electronic cables and connections	Regularly	Do a check on the electronic cables and connections.
Hydraulic jacks	Regularly	Remove dirt, sand, mud and other materials that can prevent the operation of the hydraulic leveling system.
		If the jacks stay extended for a longer period of time, the piston rods must be sprayed with a silicone lubricant. Do this more regularly if the vehicle is in a salty environment.
Piston rods	Regularly	Do a check on the piston rods for rail tracks and damages.
		Clean the piston rods and spray it with a silicone spray.
Hoses, cables and plugs	Regularly	Do a check for external damages and correct routing. If necessary, replace the damaged or worn hoses. Refer to *Connect the hydraulic hoses*.
Cylinders and hose connections	Yearly	Spray the cylinders, including hose connections, with an anti-corrosive agent when the jacks are retracted. E&P Hydraulics recommends Wekem WS 440, Pfinder AP 23/1, Elaskon K60 ML or Würth corrosion protection spray.

Maintenance for cold weather

E&P Hydraulics recommends the follow safety and precaution measures in winter conditions:

- Use a special hydraulic oil for low temperatures.
- Make sure that the jacks are clean.
- Clean the cylinder rod, and spray it with a silicone lubricant.
- Make sure that there is no dirt on the foot plates, especially at the bottom.
- Put the vehicle in a location as clean and flat as possible.
- Put a piece of rubber or carpet between the frozen surface and the footplates.
- If necessary, remove snow and ice from the jacks.

TROUBLESHOOTING

General troubleshooting procedure

If there are any error messages, make sure that:

- The handbrake is engaged.
- The ignition is set to ON.
- The battery has sufficient voltage.
- The oil level is correct.
- The jacks do not have damages.
- The cables do not have damages.

If this does not solve the problem, there could be something wrong with the drive units. When you think the drive units do not operrate correctly, speak to your E&P Hydraulics dealer/installer.

Error descriptions

Symbol	Error message	Description	Possible solution
	Pull parkbrake	The handbrake is not engaged.	Engage the handbrake.
	Vehicle battery empty *Charge battery*	The battery does not have sufficient power for the leveling system to operate.	Charge the battery.
	Angle of incline too large *Use manual operation*	The inclination is too large to automatically level the vehicle.	Manually level the vehicle. If the jacks are too short, put blocks below the jacks. **Warning:** - One ore more wheels could come off the ground. - The vehicle could move because of a slippery surface.
	Overheat error *Wait for cool down*	The pump has operated for too long and is too hot.	Let the pump cool down before you use the leveling system.

Symbol	Error message	Description	Possible solution
	Retract error *Jacks not retracted*	The jacks could not retract. It is possible that the oil level is insufficient, or that there is a defect in the system.	Speak to your dealer. **Warning:** Before you drive the vehicle, make sure that the four jacks are fully retracted. Refer to *Emergency operation*.
	Jack down time error *No movement felt*	The jacks did not correctly touch the ground. It is possible that the jacks sank into the ground, or the oil level is insufficient.	Retract the jacks. Extend the jacks and monitor the movement of the jacks.
	Level movement error *Possible jacks too short*	The leveling procedure could not be completed, possibly because the jacks are too short.	Manually level the vehicle, move the vehicle to a flatter area, or put blocks below the retracted jacks and do the procedure again.
	Movement time error	The leveling procedure could not be completed. It is possible the jacks sank into the ground, or the oil level is insufficient.	Retract the jacks. Extend the jacks and monitor the movement of the jacks.
	Wrong movement *Left-right inverted*	The vehicle makes an unexpected movement during the leveling procedure. The cause could be wind, one or more jacks sank into the ground, or someone moved the vehicle.	Do the leveling procedure again.
	Wrong movement *Front-rear inverted*	The vehicle makes an unexpected movement during the leveling procedure. The cause could be wind, one or more jacks sank into the ground, or someone moved the vehicle.	Do the leveling procedure again.

Error mode

- If the ignition switch is not set to ON, or if the hand brake is not engaged, the leveling system cannot be started.
- The retracting procedure stops if the pump is runs on overpressure for a few seconds. A timer counts up when the pump operates and counts down when the pump does not operate. If this timer gets at a value that is too high, the pump stops so it does not get too hot.

Troubleshooting table

Problem	Possible cause	Possible solution
The hydraulic leveling system does not work.	The ignition of the vehicle is not set to ON.	Set the ignition to ON.
	The handbrake is not engaged.	Engage the handbrake.
	The control panel stopped after 4 minutes.	Start the touchscreen.
The battery low LED is on.	The battery is almost empty.	Start the vehicle to charge the battery.
The LED message retract all jacks does not go out when the supports are retracted (possibly in combination with a failure of the automatic leveling).	The oil level is too low.	Do a check on the oil level. If necessary, fill the tank when the jacks are fully retracted.
	The retract the jacks button does not operate correctly.	Do a check on the wiring connections. If necessary, replace them.
The jacks do not (fully) extend when the pump operates.	The oil level is too low.	Do a check on the oil level. If necessary, fill the tank when the jacks are fully retracted.
	The valve or the pump does not operate correctly.	Clean, repair or change the valve or pump.
	There is no electrical connection between the operation system and the valve.	Do a check on the cables for voltage loss. If necessary, repair or replace the cables.

Note: For all other problems, speak to your dealer/installer.

Reset the touchscreen settings

Use this procedure if during installation the wrong language or the wrong vehicle type was chosen, or if you want to reset the system.

1. On the touchscreen, push the settings button.

   ✓ A pop-up keypad shows.
2. Enter the code *374* and push *OK*.
3. Enter the code *1234* and push *OK*.
4. Push *DEALER*.

   - Push *SYSTEM CONFIGURATION* to reset the vehicle type.
   - Push *RESET LANGUAGE SELECTION* to reset the language.
   - Push *FACTORY RESET* to set the system to the factory settings.

   ✓ A pop-up keypad shows.
5. Push *YES*.

   ✓ A pop-up keypad shows.
6. Push *OK*.

TECHNICAL SPECIFICATIONS

Specifications of the hyraulic pump

Dimensions and mass

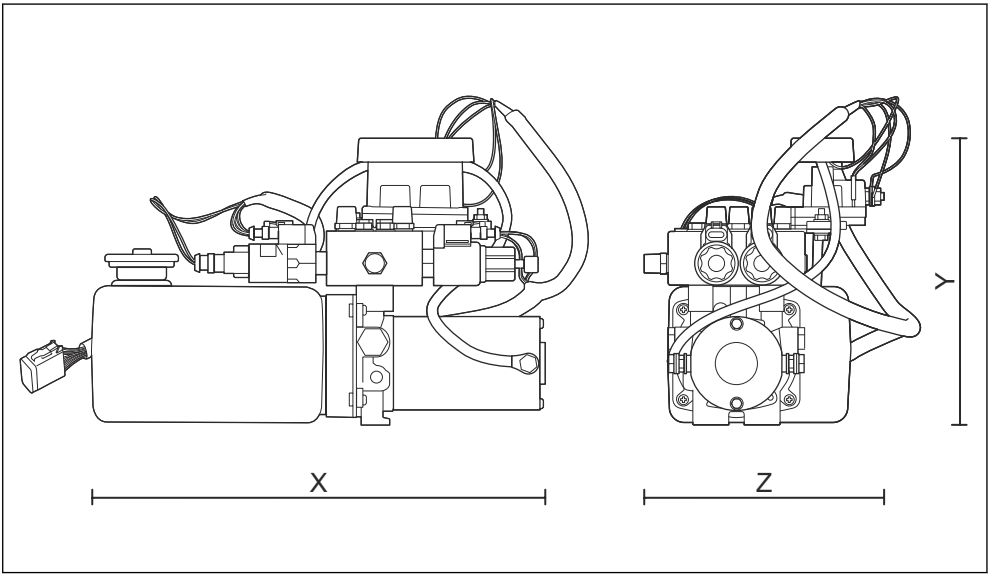

Item	Specification (metric units)	Specification (imperial units)
Length (X)	425 mm	16.73 in
Height (Y)	175 mm	6.89 in
Width (Z)	170 mm	6.69 in
Mass	7,200 g	15.87 lb

Electrical data

Item	Value
Power supply	12 Vdc, 24 Vdc

Ambient conditions

Item	Specification (metric units)	Specification (imperial units)
Temperature	-20°C to +50°C	-4°F to +120°F

Specifications of the hydraulic jacks

Dimensions and mass

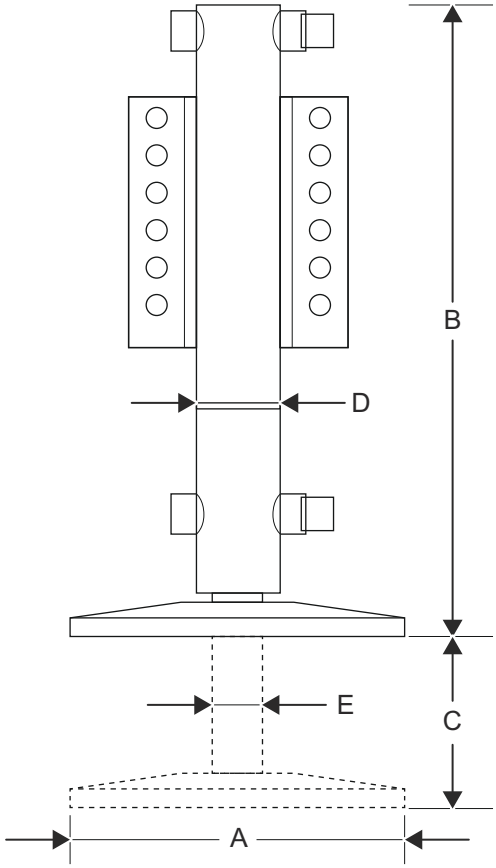

Item	Specification (metric units)	Specification (imperial units)
Baseplate (A)	Ø 180 - 230 mm	Ø 7.09 - 9.06 in
Total length (B)	330 - 630 mm	12.99 - 24.8 in
Stroke (C)	310 - 483 mm	12.2 - 19.02 in
Cylinder tube (D)	Ø 55 - 85 mm	2.17 - 3.35 in
Piston rod (E)	Ø 35 - 65 mm	1.38 - 2.56 in
Mass	6.7 - 25 kg	14.77 - 55.12 lb

E&P HYDRAULICS
Haverstraat 143
2153 GD, Nieuw Vennep
The Netherlands
+31 (0)25 2626151
info@ep-hydraulics.nl
https://www.ep-hydraulics.nl/en