PRODUCT MANUAL

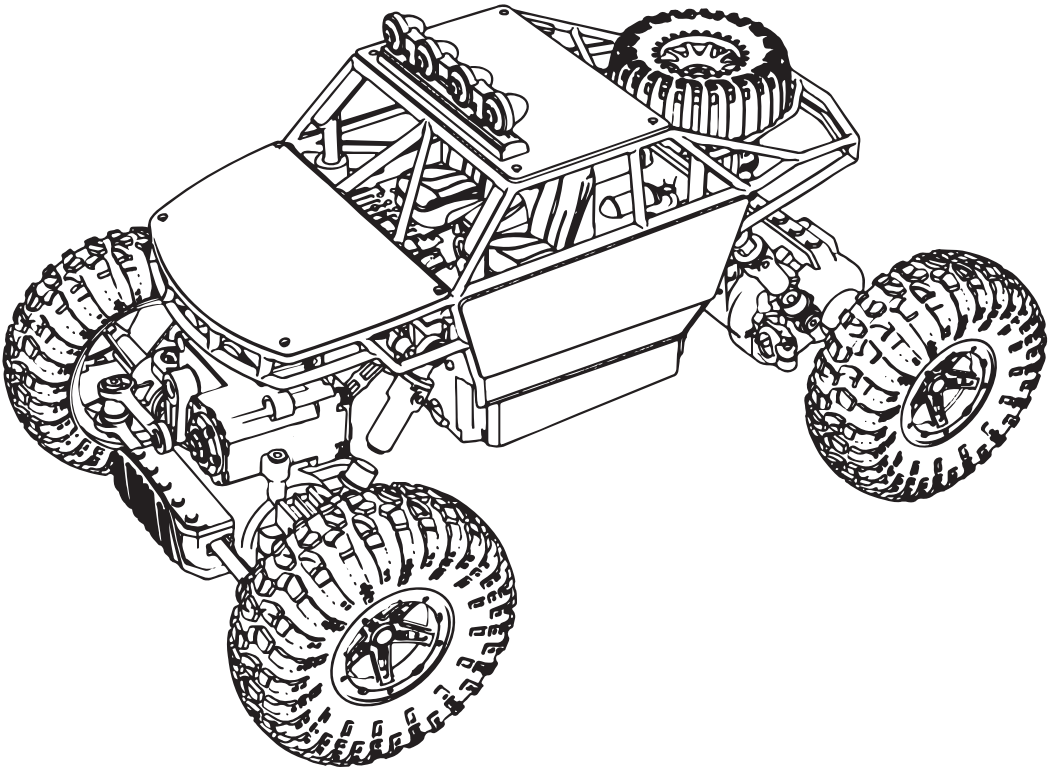

< PREFACE >

To make your experience with this remote control car as easy and convenient as possible, please read the instructions provided before using the product. Enjoy and have fun with the product while keeping the manual for future maintenance and reference.

1. In order to protect the legitimate rights and interests of users, please be sure to carefully read the contents of this manual before using this product.
2. When using this product, please be sure to strictly observe and perform the requirements which includes but not limited to the instructions and safety guidelines. For any personal injury, accident, property loss, legal dispute, or any other adverse event causing a conflict of interest resulting from the use of the product or any irresistible factors that are in violation of the safety instructions, the user shall bear the related responsibilities and losses. DEERC will not take any responsibility.
3. Once you start using the product, you are deemed to have read, understood, recommended, and accepted all terms and contents of the instructions (including disclaimers, safety instructions, warning instructions, etc.) included with this product.
4. In case you are having challenges on any aspect of the product, may it be operation or maintenance, please contact your local sales agent or contact customer support at DEERC.

< PACKAGE CONTENTS >

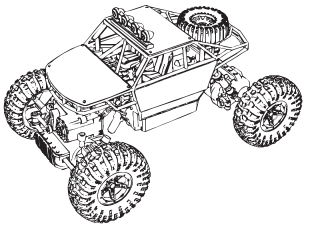	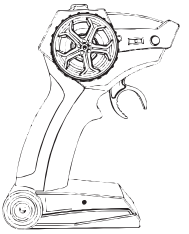	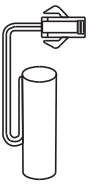
RC Car	Remote Control	Battery
	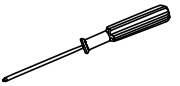	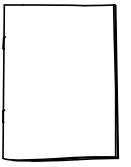
USB Charging Cable	Screwdriver	Instructions For Use

< RC CAR'S DETAILS >

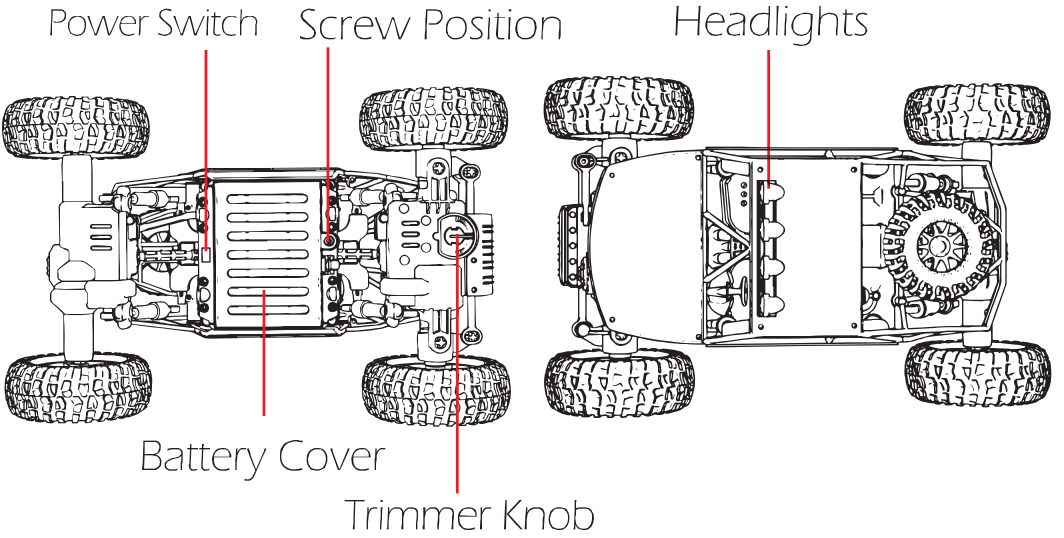

< REMOTE CONTROL FUNCTIONS >

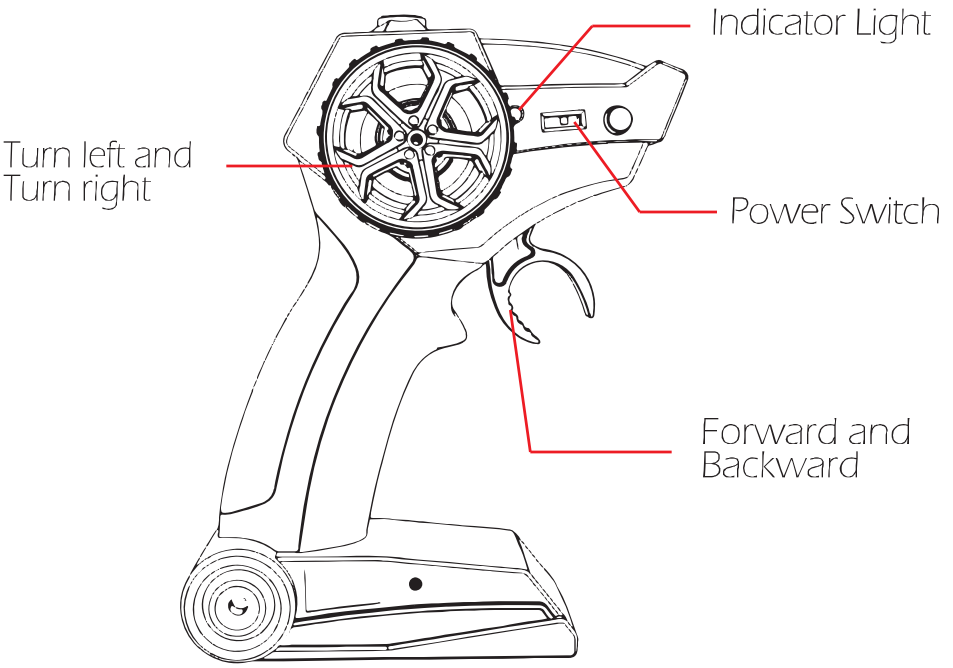

< BATTERY INSTALLATION >

1. RC Car Battery

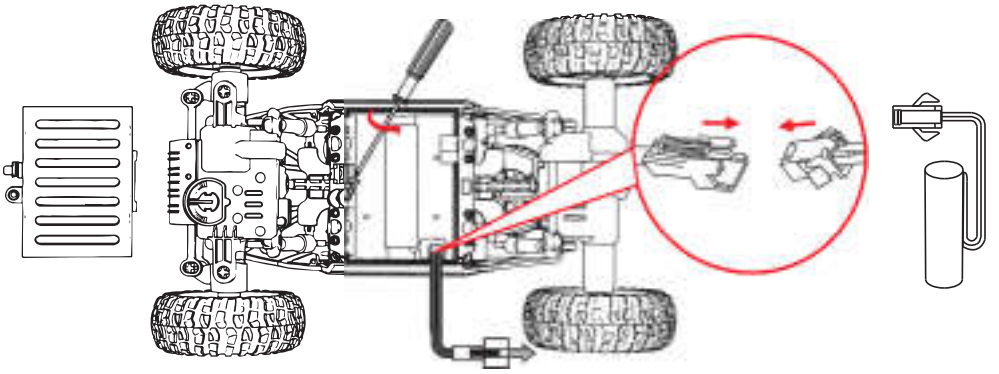

① Unscrew and open the battery cover.
② Connect the battery cable to the cable in the battery compartment then insert the battery into the battery compartment.
③ Close the battery cover and lock it.

If the car will not be used for a long time, make sure to take out the battery.

2. Remote Control Battery

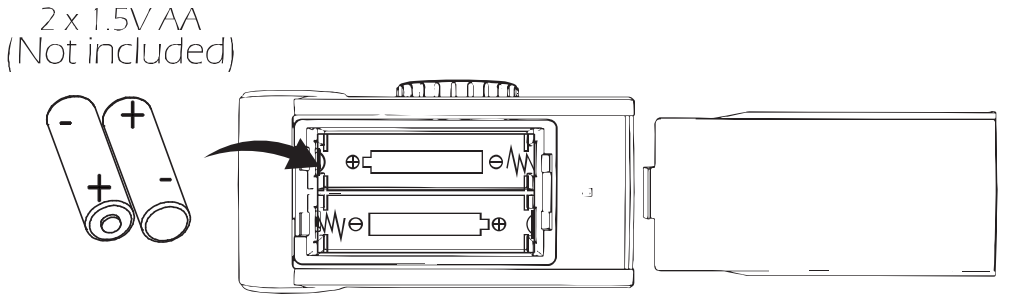

① Open the battery cover.
② Insert 2 AA batteries in the right direction.
③ Close the battery cover.

If the remote control will not be used for a long time, make sure to take out the batteries.

< CHARGING >

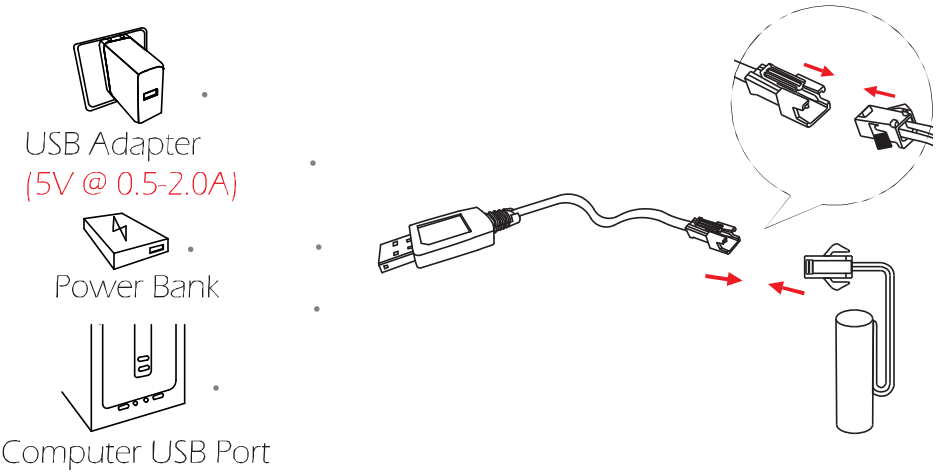

1. Plug the USB charging cable into the USB charging port of the computer, power bank or USB adapter (5V@ 0.5~2.0A).
2. Connect the battery wire to the USB charging cable.
3. Charging time: about 90 minutes.
4. The red indicator light on the USB charging cable will turn on when it is charging and will turn off once fully charged.

ATTENTION:

- Please keep the battery in sight when charging. Do not put the battery on a flammable surface.
- If battery pack and USB charging cable are damaged, immediately stop using it and replace the accessories as soon as possible.

< OPERATION >

1. Pairing

Once batteries are inserted to the car and the remote, turn on the car followed by the remote. Both will automatically pair.

The remote power indicator will flash while waiting for the pairing process and will turn off once pairing has been successful.

2. Forward, Backward, Turn left and Turn right

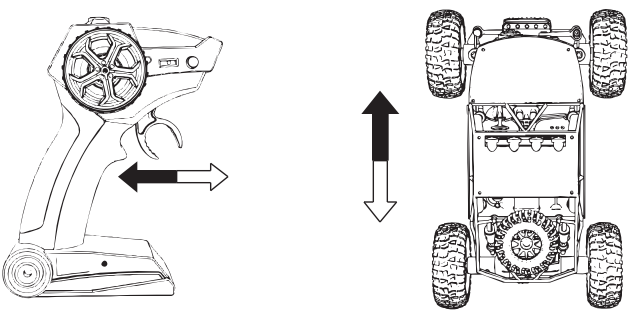

Pull the throttle trigger backward, the car goes forward. Push the throttle trigger forward, the car goes backward.

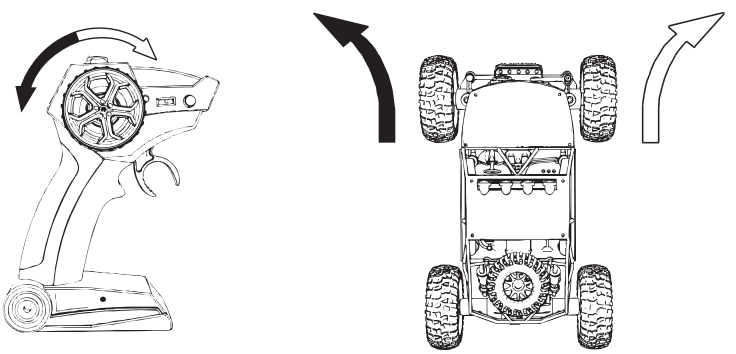

Turn the steering control wheel counterclockwise, the car turns left. Turn the steering control wheel clockwise, the car turns right.

< SPECIFICATIONS >

Operating Time: < 45 minutes
Dimensions: 27.5 x 18 x 14.2 cm
Battery Type For Car: 3.7V Li-ion battery
Charging Time: about 90 minutes
Max Control Distance: 50 m
Battery Type For Remote Control: 1.5V AA battery
USB Charging Cable: Voltage 5V
Rated Power ≤ 10W
Operating Temperature Range: 32° to 104°F (0° to 40°C)

NOTE: This equipment has been tested and found to comply with the limits for a
Class B digital device, pursuant to part 15 of the FCC Rules. These limits are designed to provide reasonable protection against harmful interference in a residential installation. This equipment generates uses and can radiate radio frequency energy and, if not installed and used in accordance with the instructions,may cause harmful interference to radio communications. However, there is no guarantee that interference will not occur in a particular installation. If this equipment does cause harmful interference to radio or television reception, which can be determined by turning the equipment off and on, the user is encouraged to try to correct the interference by one or more of the following measures:

- Reorient or relocate the receiving antenna.
- Increase the separation between the equipment and receiver.
-Connect the equipment into an outlet on a circuit different from that to which the receiver is connected.
-Consult the dealer or an experienced radio/TV technician for help

Changes or modifications not expressly approved by the party responsible for compliance could void the user's authority to operate the equipment.

This device complies with Part 15 of the FCC Rules.
Operation is subject to the following two conditions:
(1) this device may not cause harmful interference, and
(2) this device must accept any interference received, including interference that may cause undesired operation.

< WARNINGS >

1. According to the instructions provided on the manual. Some part needs to be assembled and adjusted by adults.
2. Please use under the guidance of an adult.
3. Please promptly put away the packing materials so as not to cause harm to children.
4. Do not operate on a location where water is trapped or under the rain. Parts of the product may malfunction if exposed to water.
5. Do not touch the rotating wheel to avoid injury.
6. The product contains small parts that may pose a risk of ingestion or suffocation.
7. To remotely control the product on the road or in a crowd to avoid accidents.
8. It is necessary to periodically check the charging USB cable, plug, housing and other components, and immediately unplug if found to be damaged.
9. This product can only use the factory configured USB cable to charge the product battery.
10. USB cable, battery box, and battery must be inserted into the same specified power supply as the product symbol.
11. The USB charging cable and the battery is not a toy.
12. Disconnect the rechargeable USB cable before cleaning the toy.
13. If you observe electrical charges during product usage, turn off the device immediately.
14. When installing or replacing the battery, pay attention to the correct polarity of the battery.
15. The remote control car uses a 3.7V Li-ion battery.
16. It is strictly prohibited do the following actions such as but not limited to disassemble, modify, crash, puncture, drop, throw in a fire or any other means of causing damage to the product to avoid harm to the user and other participants.
17. Do not expose the battery to prolonged exposure to sunlight to prevent danger.
18. It is advisable to store the battery at a temperature below

30°C. Do not store it in a place with heat, high temperature, or humidity to avoid danger.
19. Non-rechargeable batteries cannot be charged.
20. When charging a rechargeable battery, adult supervision is required.
21. The rechargeable battery should be removed from the toy before charging.
22. Do not mix old and new or different types of batteries.
23. Only use the USB cable configured by this product when charging the battery.
24. Do not disassemble the battery or modify the battery to avoid risk of fire or explosion.
25. After the battery is used, it should be taken out of the remote control car. After cooling the battery, you can then charge it and placed it on a safe location. Unplug the battery outlet from the USB charging cable when not in used and disconnect the power line.
26. Stop using the battery as soon as it gives a foul smells or suddenly becomes hot, deformed, discolored, or otherwise abnormal during use or charging.
27. After the battery of the remote controller runs out, battery temperature is usually high and would recommend to wait for 30 minutes before charging the battery again. Otherwise, it may damage the battery.
28. Drained batteries should be removed immediately.
29. Do not cause the electrical supply of the wiring port to short circuit.
30. If you do not use the product for a long time, remove the batteries of the remote control car and remote control.
31. instructions contains important product information, please give time to read for better product experience.

< GENERAL INFORMATION >

FCC Notice:
This device complies with Part 15 of the FCC Rules.
Operation is subject to the following two conditions:
(1) This device may not cause harmful interference, and
(2) This device must accept any interference received, including

interference that may cause undesired operation.
NOTE: This equipment has been tested and found to comply with the limits for a Class B digital device, pursuant to Part 15 of the FCC Rules. These limits are designed to provide reasonable protection against harmful interference in a residential installation. This equipment generates uses and can radiate radio frequency energy and, if not installed and used in accordance with the instructions, may cause harmful interference to radio communications. However, there is no guarantee that interference will not occur in a particular installation. If this equipment does cause harmful interference to radio or television reception, which can be determined by turning the equipment off and on, the user is encouraged to try to correct the interference by one or more of the following measures:
---Reorient or relocate the receiving antenna.
---Increase the separation between the equipment and receiver.
---Connect the equipment into an outlet on a circuit different from that to which the receiver is connected.
---Consult the dealer or an experienced radio/TV technician for help.

WARNING: Changes or modifications not expressly approved by the party responsible for compliance could void the user's authority to operate the equipment. from that to which the receiver is connected.

RF Exposure
The equipment complies with FCC radiation exposure limits set forth for an uncontrolled environment. This device should be installed and operated with minimum distance 20cm between the radiator & your body.

IC Notice:
This device complies with Canada Industry licence-exempt RSS standard(s). Operation is subject to the following two conditions:

(1) this device may not cause interference; and
(2) this device must accept any interference. Including interference that may cause undesired operation of the device.

CAN NMB-3 (B)
RF Exposure
Radiation Exposure Statement:
This equipment complies with IC radiation exposure limits set forth for an uncontrolled environment. This equipment should be installed and operated with minimum distance 20cm between the radiator & your body.

BATTERY WARNING:
1. Failure to follow all the instructions may result in serious injury, irreparable damage to the battery and may cause a fire, smoke or explosion.
2. Always check the battery's condition before charging or using it.
3. Replace the battery if damaged, gives a foul odor or show signs of overheating, discoloration, deformation and leakage.
4. Never use anything other than the approval charger the battery. Always use a balancing charger for battery. It is recommended that you do not to use any other charger than the one provided with the product.
5.The battery temperature must never exceed 60°C (140°F) otherwise the battery could be damaged or ignite.
6. Never charge on a flammable surface, near flammable products or inside a vehicle (perferably place the battery in a non-flammable and nonconductive container).
7. Never leave the battery unattended during the charging process. Never disassemble or modify the housing's wiring, or puncture the cells. Always ensure that the charger output voltage corresponds to the voltage of the battery. Do not overcharge the batter that may cause short circuit.

8. Never expose the battery to moisture or direct sunlight, or store it in a place where temperatures could exceed 60°C(car in the sun, for example).
9. Always keep it out of reach from children.
10. Improper battery use may result in a fire, explosion or other hazard.
11. Non-rechargeable batteries are not be charge again. Rechargeable batteries are only to be charged with the supervision of an adult.
12. Different types of batteries or new or used batteries which are different are not be mixed.
13. Batteries are to be inserted with the correct polarity.
14. The supply terminal should be used well to avoid short circuit. Examination of the transformer and battery charger regularly is encouraged to check any damage in the cord, plug, enclosure and other parts. If damage is observed, it must not be used until it has been repaired.
15.The packaging has to be kept since it contains important information.
16.The toy is only to be connected to Class II equipment bearing the symbol.

Using Environment Note

When the RC car was not using, please place the RC car in a ventilated and dry place. When the car body has the water stains, we would suggest you dry it in time. To prevent the metal sheets of the product from aging or rusting.

< TRIMMER FUNCTION >

If the car turns left while moving forward without the steering wheel being tnurned to the left, please turn the trimmer knob at the bottom of the car to the right until the car goes straight.

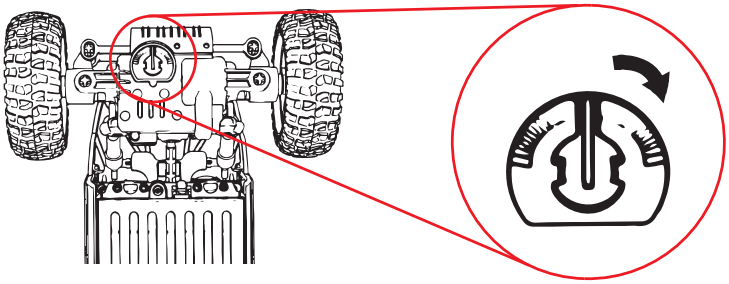
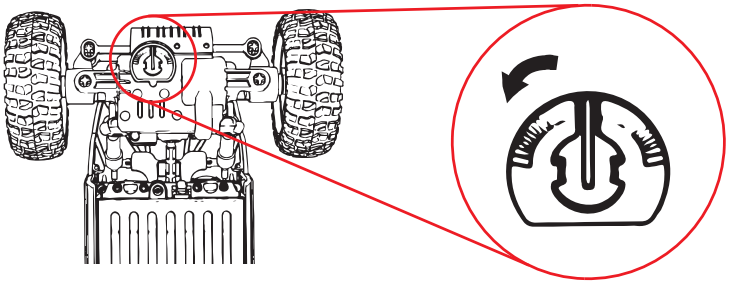
If the car turns right while moving forward without the steering wheel being tnurned to the right, please turn the trimmer knob at the bottom of the car to the left until the car goes straight.