EUT Specification

FCC ID: 2A5HZWFR-904360C

Characteristics	Description
Product Name	15W Wireless Charger
Model number	WFR-904360C
Power Supply	DC 5V, 3A; 9V, 2A
Operating Frequency Range	110-205KHz
Modulation Technique	ASK
Antenna Type	Induction coil
Device category	☐ Portable (<20cm separation) ☒ Mobile (>20cm separation) ☐ Others ___
Exposure classification	☐ Occupational/Controlled exposure (S = 5mW/cm2) ☒ General Population/Uncontrolled exposure (S=1mW/cm2)
Antenna diversity	☒ Single antenna ☐ Multiple antennas ☐ Tx diversity ☐ Rx diversity ☐ Tx/Rx diversity
Evaluation applied	☒ MPE Evaluation ☐ SAR Evaluation

Applicable Standard:

FCC Part 1(1.1310) ,Part 2(2.1091) and KDB 680106 D01 RF Exposure Wireless Charging Apps v03

Applicable Requirement:

Three different categories of transmitters are defined by the FCC in OET Bulletin 65.
These categories are fixed installation, mobile, and portable and are

defined as follows:
Fixed Installations: fixed location means that the device, including its antenna, is physically secured at a permanent location and is not able to be easily moved to another location. Additionally, distance to humans from the antenna is maintained to at least 2 meters.
Mobile Devices: a mobile device is defined as a transmitting device designed to be used in other than fixed locations and to be generally used in such a way that a separation distance of at least 20 centimeters is normally maintained between the transmitter's radiating structures and the body of the user or nearby persons. Transmitters designed to be used by consumers or workers that can be easily re-located, such as a wireless modem operating in a laptop computer, are considered mobile devices if they meet the 20 centimeter separation requirement. The FCC rules for evaluating mobile devices for RF compliance are found in 47 CFR §2.1091.
Portable Devices: a portable device is defined as a transmitting device designed to be used so that the radiating structure(s) of the device is/are within 20 centimeters of the body of the user. Portable device requirements are found in Section 2.1093 of the FCC's Rules (47 CFR§2.1093).
The FCC also categorizes the use of the device as based upon the user's awareness and ability to exercise control over his or her exposure. The two categories defined are Occupational/ Controlled Exposure and General Population/Uncontrolled Exposure.
These two categories are defined as follows:
Occupational/controlled exposure limits apply in situations in which persons are exposed as a consequence of their employment provided those persons are fully aware of the potential for exposure and can exercise control over their exposure. Limits for occupational/controlled exposure also apply in situations when a person is transient through a location where occupational/controlled limits apply provided he or she is made aware of the potential for exposure. The phrase fully aware in the context of applying these exposure limits means that an exposed person has received written and/or verbal information fully explaining the potential for RF exposure resulting from his or her employment. With the exception oftransient persons, this phrase also means that an exposed person has received appropriate training regarding work practices relating to controlling or mitigating his or her exposure. Such training is not required for transient persons, but they must receive written and/or verbal information and notification (for example, using signs) concerning their exposure potential and appropriate means available to mitigate their exposure. The phrase exercise control means that an exposed person is allowed to and knows how to reduce or avoid exposure by administrative or engineering controls and work practices, such as use of personal protective equipment or time averaging of exposure.
General population/uncontrolled exposure limits apply in situations in which the general public may be exposed, or in which persons who are

exposed as a consequence of their employment may not be fully aware of the potential for exposure or cannot exercise control over their exposure. Licensees and applicants are responsible for compliance with both the occupational/controlled exposure limits and the general population/uncontrolled exposure limits as they apply to transmitters under their jurisdiction. Licensees and applicants should be aware that the occupational/controlled exposure limits apply especially in situations where workers may have access to areas in very close proximity to antennas and access to the general public may be restricted.
In lieu of evaluation with the general population/uncontrolled exposure limits, amateur licensees authorized under part 97 of this chapter and members of his or her immediate household may be evaluated with respect to the occupational/controlled exposure limits in this section, provided appropriate training and information has been provided to the amateur licensee and members of his/her household. Other nearby persons who are not members of the amateur licensee's household must be evaluated with respect to the general population/uncontrolled exposure limits.

Test Setup Block

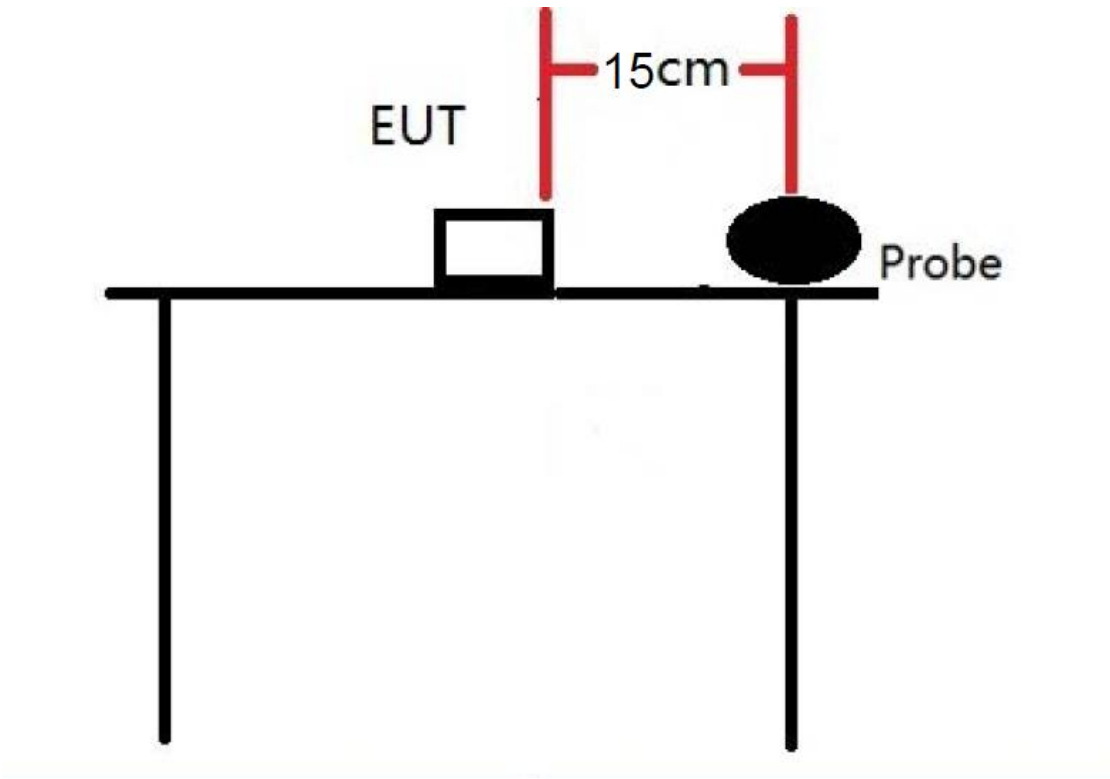

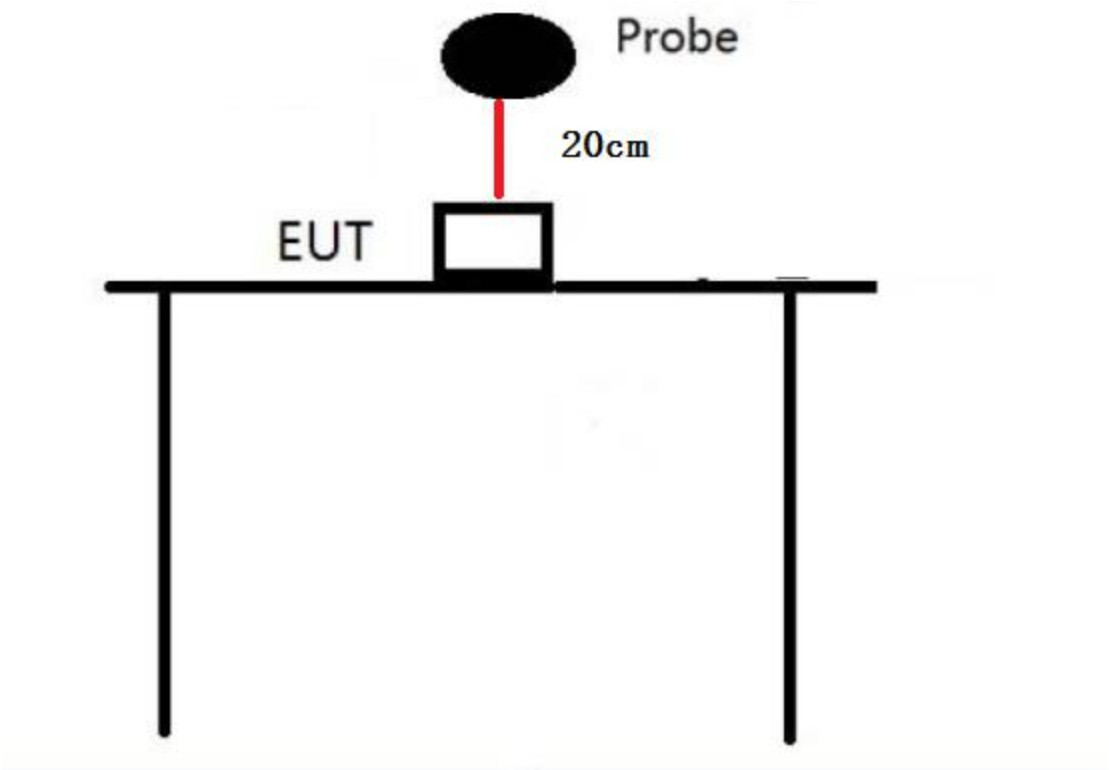

Test Procedure

1.Connect the EUT and equipment as above diagram of test configuration.
2.EUT was placed on a table, and the measure probe was placed at a measurement distance of 15cm from the EUT to the center of the probe.
3.Power on the measuring probe, the EUT was set at the maximum field strength emission state.
4.The EUT was put in different directions (Left, Right, Front, Rear, Top and Bottom) toward to the measure probe. The distance from the top of the EUT to the probe is 20CM, and the distance from other directions is 15cm.Measure the value of field strength.
5.Record the worst data of the different directions.

Measuring Device And Test Equipment

Used	Equipment	Manufacturer	Model No.	Serial No.	Last Cal.	Cal. Interval
☛	E&H-Field Probe(9kHz-30MHz)	Narda	EHP-200A	180ZX11012	Mar. 02, 2022	1 Year

Description of Support Device

iPhone	:	Manufacturer: Apple Inc. M/N: A1524 S/N: N/A
Wireless Charger Receiver Module	:	Manufacturer: Universal M/N: N/A S/N: N/A
Adapter	:	Model number:580245A087 Input: AC 100-240V, 50/60Hz Manufacturer: SAMSUNG
SAMSUNG S9	:	M/N:Samsung Galaxy S9 S/N: N/A
Xiaomi 9	:	Manufacturer: Xiaomi M/N:Xiaomi 9 S/N: N/A

Limits for Maximum Permissible Exposure(MPE)

Frequency Range(MHz)	Electric Field Strength(V/m)	Magnetic Field Strength(A/m)	Power Density(mW/cm^2)	Average Time
(A) Limits for Occupational/Control Exposures				
0.3-3.0	614	1.63	(100)*	6
3.0-30	1842/f	4.89/f	(900/f)*	6
30-300	61.4	0.163	1.0	6
300-1500	--	--	F/300	6
1500-100000	--	--	5	6
(B) Limits for General Population/Uncontrol Exposures				
0.3-1.34	614	1.63	(100)*	30
1.34-30	824/f	2.19/f	(180/f)*	30
30-300	27.5	0.073	0.2	30
300-1500	--	--	F/1500	30
1500-100000	--	--	1	30

Note: f denotes for frequency in MHz.

* denotes for plane-wave equivalent power density.

Measurement Result

We pretested four modes (max load, mid load, min load, Standby) for EUT. The worst mode (max load) and worst test frequency(frequency：124KHz)test data see the following.

Magnetic Field (H-Field) strength at 15cm from the boundaries of EUT, and 20cm from the top.

Test Mode: Wireless Charging 15w for 1% battery						
		Measuring Distance(cm)	H-Field(A/m)	50% H-Field(A/m)	Limit(A/m)	50% Limit(A/m)
Measurement Point 1	Front	15	0.0521	0.0261	1.63	0.815
Measurement Point 2	Back	15	0.0516	0.0258		
Measurement Point 3	Left	15	0.0523	0.0262		
Measurement Point 4	Right	15	0.0512	0.0256		
Measurement Point 5	Bottom	15	0.0412	0.0206		
Measurement Point 6	Top	20	0.0533	0.0267		

Test Mode: Wireless Charging 15w for 1% battery						
		Measuring Distance(cm)	E-Field(V/m)	50% E-Field(V/m)	Limit(V/m)	50% Limit(V/m)
Measurement Point 1	Front	15	1.3254	0.6627	614	307
Measurement Point 2	Back	15	1.3452	0.6726		
Measurement Point 3	Left	15	1.3365	0.6683		
Measurement Point 4	Right	15	1.2547	0.6274		
Measurement Point 5	Bottom	15	1.1358	0.5679		
Measurement Point 6	Top	20	1.6235	0.8118		

Test Mode: Wireless Charging 15w for 50% battery						
		Measuring Distance(cm)	H-Field(A/m)	50% H-Field(A/m)	Limit(A/m)	50% Limit(A/m)
Measurement Point 1	Front	15	0.0513	0.0257	1.63	0.815
Measurement Point 2	Back	15	0.0523	0.0262		
Measurement Point 3	Left	15	0.0516	0.0258		
Measurement Point 4	Right	15	0.0522	0.0261		
Measurement Point 5	Bottom	15	0.0506	0.0253		
Measurement Point 6	Top	20	0.0541	0.0271		

Test Mode: Wireless Charging 15w for 50% battery						
		Measuring Distance(cm)	E-Field(V/m)	50% E-Field(V/m)	Limit(V/m)	50% Limit(V/m)
Measurement Point 1	Front	15	1.3584	0.6792	614	307
Measurement Point 2	Back	15	1.3641	0.6821		
Measurement Point 3	Left	15	1.3652	0.6826		
Measurement Point 4	Right	15	1.2585	0.6293		
Measurement Point 5	Bottom	15	1.2102	0.6051		
Measurement Point 6	Top	20	1.3725	0.6863		

Test Mode: Wireless Charging 15w for 100% battery						
		Measuring Distance(cm)	H-Field(A/m)	50% H-Field(A/m)	Limit(A/m)	50% Limit(A/m)
Measurement Point 1	Front	15	0.0425	0.0213	1.63	0.815
Measurement Point 2	Back	15	0.0412	0.0206		
Measurement Point 3	Left	15	0.0432	0.0216		
Measurement Point 4	Right	15	0.0416	0.0208		
Measurement Point 5	Bottom	15	0.0403	0.0202		
Measurement Point 6	Top	20	0.0447	0.0224		

Test Mode: Wireless Charging 15w for 100% battery						
		Measuring Distance(cm)	E-Field(V/m)	50% E-Field(V/m)	Limit(V/m)	50% Limit(V/m)
Measurement Point 1	Front	15	1.1525	0.5763	614	307
Measurement Point 2	Back	15	1.1236	0.5618		
Measurement Point 3	Left	15	1.1245	0.5623		
Measurement Point 4	Right	15	1.1320	0.5660		
Measurement Point 5	Bottom	15	1.0369	0.5185		
Measurement Point 6	Top	20	1.2111	0.6056		

Test Mode: Wireless Charging 10w for 1% battery						
		Measuring Distance(cm)	H-Field(A/m)	50% H-Field(A/m)	Limit(A/m)	50% Limit(A/m)
Measurement Point 1	Front	15	0.0512	0.0256	1.63	0.815
Measurement Point 2	Back	15	0.0541	0.0271		
Measurement Point 3	Left	15	0.0532	0.0266		
Measurement Point 4	Right	15	0.0528	0.0264		
Measurement Point 5	Bottom	15	0.0520	0.0260		
Measurement Point 6	Top	20	0.0539	0.0270		

Test Mode: Wireless Charging 10w for 1% battery						
		Measuring Distance(cm)	E-Field(V/m)	50% E-Field(V/m)	Limit(V/m)	50% Limit(V/m)
Measurement Point 1	Front	15	1.3252	0.6626	614	307
Measurement Point 2	Back	15	1.2547	0.6274		
Measurement Point 3	Left	15	1.2314	0.6157		
Measurement Point 4	Right	15	1.2423	0.6212		
Measurement Point 5	Bottom	15	1.2536	0.6268		
Measurement Point 6	Top	20	1.3314	0.6657		

Test Mode: Wireless Charging 10w for 50% battery						
		Measuring Distance(cm)	H-Field(A/m)	50% H-Field(A/m)	Limit(A/m)	50% Limit(A/m)
Measurement Point 1	Front	15	0.0478	0.0239	1.63	0.815
Measurement Point 2	Back	15	0.0479	0.0240		
Measurement Point 3	Left	15	0.0452	0.0226		
Measurement Point 4	Right	15	0.0436	0.0218		
Measurement Point 5	Bottom	15	0.0425	0.0213		
Measurement Point 6	Top	20	0.0488	0.0244		

Test Mode: Wireless Charging 10w for 50% battery						
		Measuring Distance(cm)	E-Field(V/m)	50% E-Field(V/m)	Limit(V/m)	50% Limit(V/m)
Measurement Point 1	Front	15	1.2352	0.6176	614	307
Measurement Point 2	Back	15	1.2145	0.6073		
Measurement Point 3	Left	15	1.2214	0.6107		
Measurement Point 4	Right	15	1.2012	0.6006		
Measurement Point 5	Bottom	15	1.1965	0.5983		
Measurement Point 6	Top	20	1.2526	0.6263		

Test Mode: Wireless Charging 10w for 100% battery						
		Measuring Distance(cm)	H-Field(A/m)	50% H-Field(A/m)	Limit(A/m)	50% Limit(A/m)
Measurement Point 1	Front	15	0.0412	0.0206	1.63	0.815
Measurement Point 2	Back	15	0.0402	0.0201		
Measurement Point 3	Left	15	0.0416	0.0208		
Measurement Point 4	Right	15	0.0403	0.0202		
Measurement Point 5	Bottom	15	0.0399	0.0200		
Measurement Point 6	Top	20	0.0425	0.0213		

Test Mode: Wireless Charging 10w for 100% battery						
		Measuring Distance(cm)	E-Field(V/m)	50% E-Field(V/m)	Limit(V/m)	50% Limit(V/m)
Measurement Point 1	Front	15	1.2235	0.6118	614	307
Measurement Point 2	Back	15	1.2141	0.6071		
Measurement Point 3	Left	15	1.2262	0.6131		
Measurement Point 4	Right	15	1.2125	0.6063		
Measurement Point 5	Bottom	15	1.1214	0.5607		
Measurement Point 6	Top	20	1.3025	0.6513		

Test Mode: Wireless Charging 7.5w for 1% battery						
		Measuring Distance(cm)	H-Field(A/m)	50% H-Field(A/m)	Limit(A/m)	50% Limit(A/m)
Measurement Point 1	Front	15	0.0414	0.0207	1.63	0.815
Measurement Point 2	Back	15	0.0426	0.0213		
Measurement Point 3	Left	15	0.0419	0.0210		
Measurement Point 4	Right	15	0.0423	0.0212		
Measurement Point 5	Bottom	15	0.0403	0.0202		
Measurement Point 6	Top	20	0.0431	0.0216		

Test Mode: Wireless Charging 7.5w for 1% battery						
		Measuring Distance(cm)	E-Field(V/m)	50% E-Field(V/m)	Limit(V/m)	50% Limit(V/m)
Measurement Point 1	Front	15	1.2358	0.6179	614	307
Measurement Point 2	Back	15	1.2654	0.6327		
Measurement Point 3	Left	15	1.2214	0.6107		
Measurement Point 4	Right	15	1.2231	0.6116		
Measurement Point 5	Bottom	15	1.1241	0.5621		
Measurement Point 6	Top	20	1.3365	0.6683		

Test Mode: Wireless Charging 7.5w for 50% battery						
		Measuring Distance(cm)	H-Field(A/m)	50% H-Field(A/m)	Limit(A/m)	50% Limit(A/m)
Measurement Point 1	Front	15	0.0423	0.0212	1.63	0.815
Measurement Point 2	Back	15	0.0425	0.0213		
Measurement Point 3	Left	15	0.0402	0.0201		
Measurement Point 4	Right	15	0.0413	0.0207		
Measurement Point 5	Bottom	15	0.0379	0.0190		
Measurement Point 6	Top	20	0.0433	0.0217		

Test Mode: Wireless Charging 7.5w for 50% battery						
		Measuring Distance(cm)	E-Field(V/m)	50% E-Field(V/m)	Limit(V/m)	50% Limit(V/m)
Measurement Point 1	Front	15	1.1325	0.5663	614	307
Measurement Point 2	Back	15	1.2032	0.6016		
Measurement Point 3	Left	15	1.1625	0.5813		
Measurement Point 4	Right	15	1.1475	0.5738		
Measurement Point 5	Bottom	15	1.1125	0.5563		
Measurement Point 6	Top	20	1.2536	0.6268		

Test Mode: Wireless Charging 7.5w for 100% battery						
		Measuring Distance(cm)	H-Field(A/m)	50% H-Field(A/m)	Limit(A/m)	50% Limit(A/m)
Measurement Point 1	Front	15	0.0402	0.0201	1.63	0.815
Measurement Point 2	Back	15	0.0378	0.0189		
Measurement Point 3	Left	15	0.0385	0.0193		
Measurement Point 4	Right	15	0.0389	0.0195		
Measurement Point 5	Bottom	15	0.0402	0.0201		
Measurement Point 6	Top	20	0.0411	0.0206		

Test Mode: Wireless Charging 7.5w for 100% battery						
		Measuring Distance(cm)	E-Field(V/m)	50% E-Field(V/m)	Limit(V/m)	50% Limit(V/m)
Measurement Point 1	Front	15	1.1325	0.5663	614	307
Measurement Point 2	Back	15	1.1403	0.5702		
Measurement Point 3	Left	15	1.1423	0.5712		
Measurement Point 4	Right	15	1.1325	0.5663		
Measurement Point 5	Bottom	15	1.1225	0.5613		
Measurement Point 6	Top	20	1.1526	0.5763		

Test Mode: Wireless Charging 5w for 1% battery						
		Measuring Distance(cm)	H-Field(A/m)	50% H-Field(A/m)	Limit(A/m)	50% Limit(A/m)
Measurement Point 1	Front	15	0.0435	0.0218	1.63	0.815
Measurement Point 2	Back	15	0.0426	0.0213		
Measurement Point 3	Left	15	0.0434	0.0217		
Measurement Point 4	Right	15	0.0435	0.0218		
Measurement Point 5	Bottom	15	0.0407	0.0204		
Measurement Point 6	Top	20	0.0441	0.0221		

Test Mode: Wireless Charging 5w for 1% battery						
		Measuring Distance(cm)	E-Field(V/m)	50% E-Field(V/m)	Limit(V/m)	50% Limit(V/m)
Measurement Point 1	Front	15	1.3214	0.6607	614	307
Measurement Point 2	Back	15	1.2652	0.6326		
Measurement Point 3	Left	15	1.2457	0.6229		
Measurement Point 4	Right	15	1.2532	0.6266		
Measurement Point 5	Bottom	15	1.2247	0.6124		
Measurement Point 6	Top	20	1.3563	0.6782		

Test Mode: Wireless Charging 5w for 50% battery						
		Measuring Distance(cm)	H-Field(A/m)	50% H-Field(A/m)	Limit(A/m)	50% Limit(A/m)
Measurement Point 1	Front	15	0.0478	0.0239	1.63	0.815
Measurement Point 2	Back	15	0.0452	0.0226		
Measurement Point 3	Left	15	0.0462	0.0231		
Measurement Point 4	Right	15	0.0451	0.0226		
Measurement Point 5	Bottom	15	0.0462	0.0231		
Measurement Point 6	Top	20	0.0441	0.0221		

Test Mode: Wireless Charging 5w for 50% battery						
		Measuring Distance(cm)	E-Field(V/m)	50% E-Field(V/m)	Limit(V/m)	50% Limit(V/m)
Measurement Point 1	Front	15	1.1225	0.5613	614	307
Measurement Point 2	Back	15	1.1325	0.5663		
Measurement Point 3	Left	15	1.2145	0.6073		
Measurement Point 4	Right	15	1.2132	0.6066		
Measurement Point 5	Bottom	15	1.2341	0.6171		
Measurement Point 6	Top	20	1.3305	0.6653		

Test Mode: Wireless Charging 5w for 100% battery						
		Measuring Distance(cm)	H-Field(A/m)	50% H-Field(A/m)	Limit(A/m)	50% Limit(A/m)
Measurement Point 1	Front	15	0.0415	0.0208	1.63	0.815
Measurement Point 2	Back	15	0.0413	0.0207		
Measurement Point 3	Left	15	0.0422	0.0211		
Measurement Point 4	Right	15	0.0421	0.0211		
Measurement Point 5	Bottom	15	0.0423	0.0212		
Measurement Point 6	Top	20	0.0416	0.0208		

Test Mode: Wireless Charging 5w for 100% battery						
		Measuring Distance(cm)	E-Field(V/m)	50% E-Field(V/m)	Limit(V/m)	50% Limit(V/m)
Measurement Point 1	Front	15	1.1225	0.5613	614	307
Measurement Point 2	Back	15	1.1236	0.5618		
Measurement Point 3	Left	15	1.2144	0.6072		
Measurement Point 4	Right	15	1.1525	0.5763		
Measurement Point 5	Bottom	15	1.1485	0.5743		
Measurement Point 6	Top	20	1.1563	0.5782		

PHOTOGRAPHS OFTEST SETUP

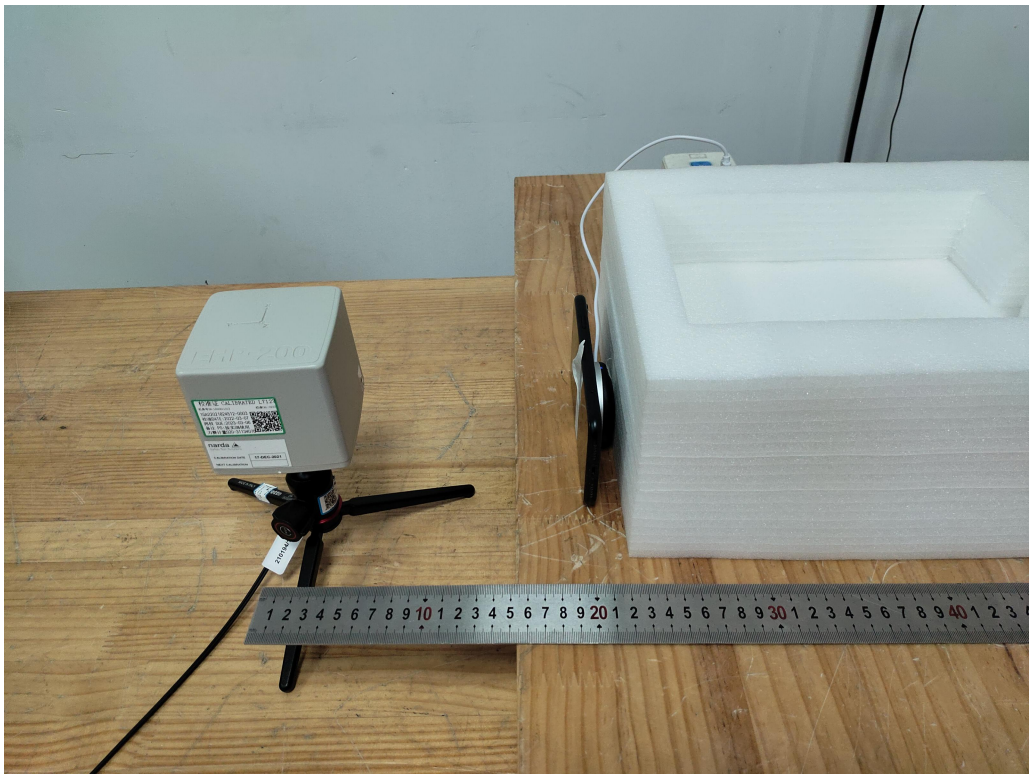

Signature

Alan He
Manager
Date: 2022-03-11