SPECIFICATION

产品型号: DESC	JYCO-F17.5X25.5-85-FR	版本 Rev:A	Customer:	JYC-CC21
			Description:	双线圈+硬磁
			Date:	20221011

一、尺寸DIMENSION:(mm)

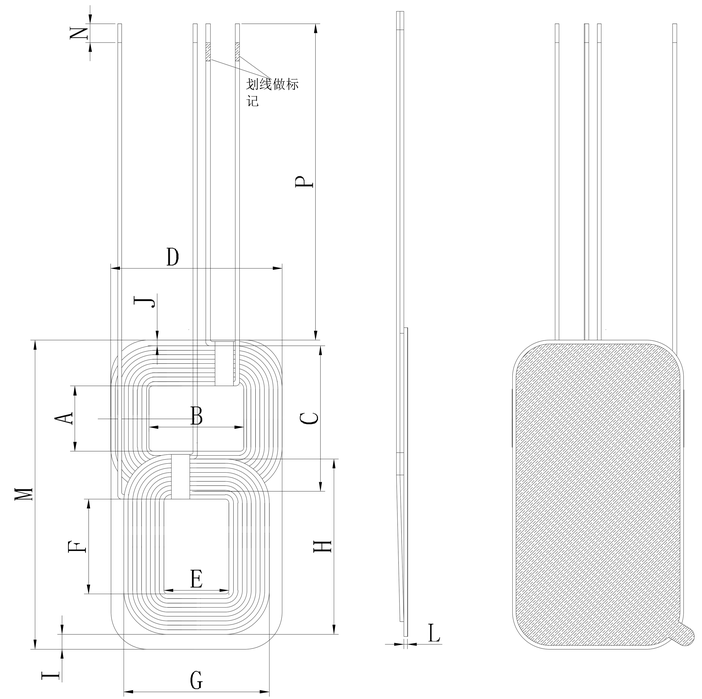

A	17.5±1.0
B	25.5±1.0
C	38±1.5
D	46±1.5
E	17.5±1.0
F	25.5±1.0
G	38±1.5
H	46±1.5
I	4±0.5
J	1.5±0.5
P	85±2.0
L	1.0±0.2
M	83±1.0
N	3.5±1.5
O	

注:

1. 双线圈贴83*46*1MM双拼硬磁
2. 线圈出线位置缠5MM高温胶带
3. 磁片贴双面胶
4. 上线圈引线划黑线做标志

二、原理图（schematic diagram:）

三、绕线参数(WindingSpecification:)

序号 NO.	端子 TERMINAL		线径 WIRE	圈数 Turns	绕线方向 Winding Direction
1			0.08X105P丝包线	9TS	逆时针

四、电气特性 ELECTRICAL CHARACTERISTICS:

温度 TEMPERATURE:25±10° C,湿度 RELATIVE HUMIDITY:65±20%

序号 NO.	项目 ITEM	端子 TERMINAL	标准 SPECIFICATION	测试条件 TEST FREQUENCY	测试仪器 TEST EQUIPMENTS
1	IND.		6.3uH±10%加磁片	100KHZ/1.0V	SHDA 1062
2	IND.		6.3uH±10%加磁片	100KHZ/1.0V	SHDA 1062
3	Q值				
4	DCR				

拟制/日期PREPARED BY/DATE	审核/日期CHECKED BY/DATE	客户/日期CUSTOMEU/DATE

SPECIFICATION SHEET

CUSTOMER: Zhongli Guanda (shenzhen) Intelligent Technology CO., Ltd

DESCRIPTION: QT14-Apple Watch Coil(length of lead :31mm)

CUSTOMER P/N:

PART NUMBER:

DATE: 2022-10-30

ACCEPTANCE STAMP

PREPARED BY	ENGINEER CHECKED BY	PRODUCTION CHECKDED BY	APPROVED BY
Feng Xin	Chao zi qi	Huang Qiong	Chen Jun

惠州启泰电子科技有限公司

ADDRESS: 3rd Floor, No. 181, Mingyue 2nd Road, Shiwan Town, Boluo County, Huizhou city
TEL: 0752-6668681 E-MAIL: 839689578@qq.com

CS 扫描全能王

History For Revised Specification	CUSTOMER P/N :	
	PART NUMBER :	

Rev.	DESCRIPTION (Content Or Reason For Changed)	Date	Revisor
A.0	The first Release version	2022/10/30	Chen Jun

PREPARED BY	ENGINEER CHECKED BY	PRODUCTION CHECKDED BY	APPROVED BY
Feng Xin	Chao zi qi	Huang Qiong	Chen Jun

ADDRESS: 3rd Floor, No. 181, Mingyue 2nd Road, Shiwan Town, Boluo County, Huizhou city
TEL: 0752-6668681 E-MAIL: 839689578@qq.com

CS 扫描全能王

Specification	CUSTOMER P/N :	
	PART NUMBER :	

1. DIMENSIONS: (Unit: mm)

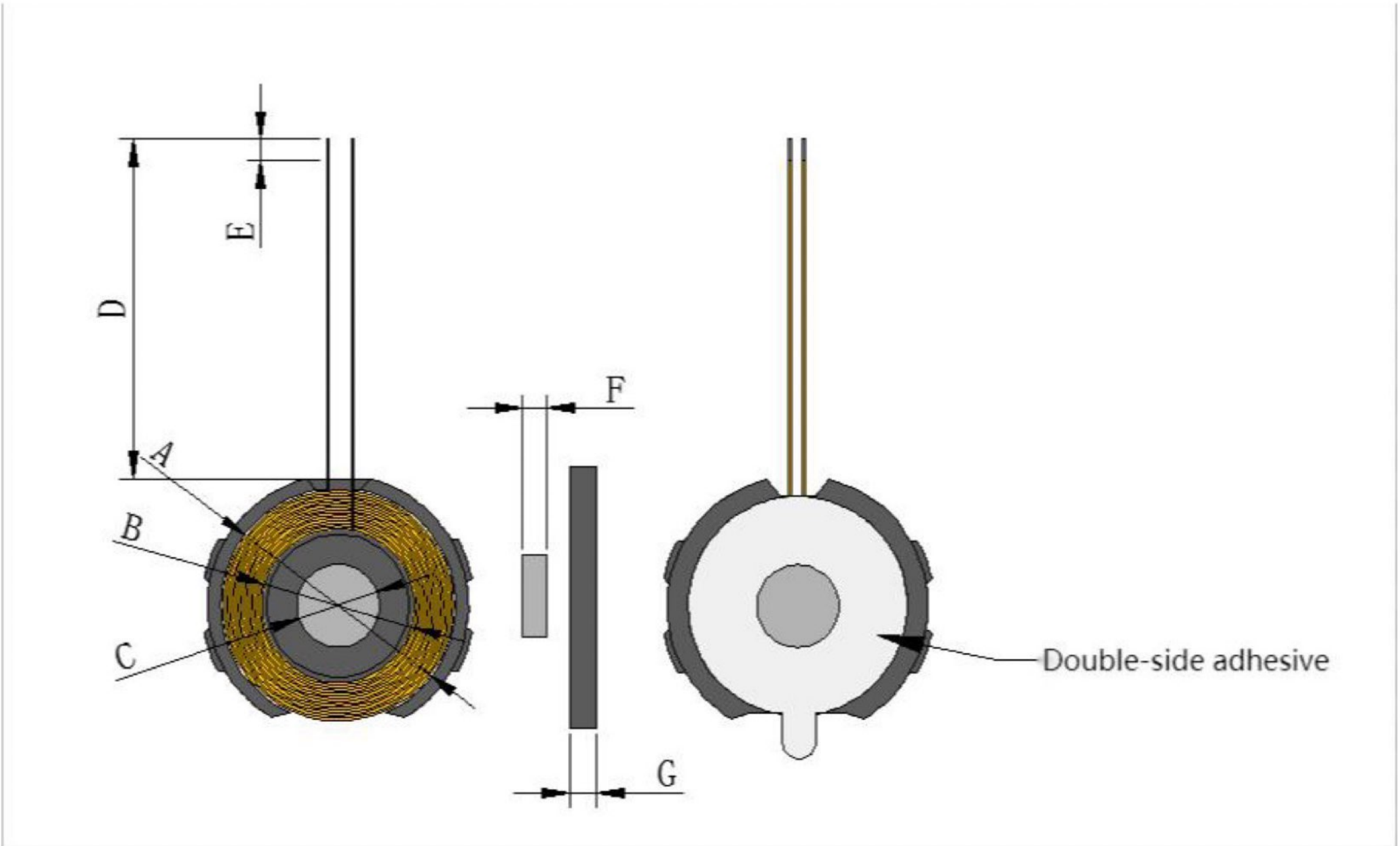

A	B	C	D	E	F			
21max	14±0.5	7.5±0.5	31±1	2.2±0.5	2.8max			

1.Magnet specifications : Φ7.5mm*2.2mm

2.Ma
gnetic magnet: 2900GS-3200GS

PREPARED BY	ENGINEER CHECKED BY	PRODUCTION CHECKDED BY	APPROVED BY
Feng Xin	Chao zi qi	Huang Qiong	Chen Jun

ADDRESS: 3rd Floor, No. 181, Mingyue 2nd Road, Shiwan Town, Boluo County, Huizhou city
TEL: 0752-6668681 E-MAIL: 839689578@qq.com

CS 扫描全能王

2. WINDING DETAILS

Turns	Wire Dia	Wdg. Type (Spred/Close)	Wdg.Direction	Intersect (Yes/No)
14 TS	0. 08*24P(Hot air self-adhesive wire)	Close	Anticlockwise	Yes

3. ELECTRICAL CHARACTERISTICS

- TEMPERATURE:25±10℃
- RELATIVE HUMIDITY:65±10%

NO.	ITEM	TERMINAL	SPECIFICATION	TEST FREQUENCY	TEST EQUIPMENTS
1.	IND	S-F	8.1μh±0.3	100kHz/V	UC2906A
2.	Q	S-F	25Min	100kHz/V	UC2906A
3.	DCR	S-F	135mΩMax	100kHz/V	UC2906A

PREPARED BY	ENGINEER CHECKED BY	PRODUCTION CHECKDED BY	APPROVED BY
Feng Xin	Chao zi qi	Huang Qiong	Chen Jun

ADDRESS: 3rd Floor, No. 181, Mingyue 2nd Road, Shiwan Town, Boluo County, Huizhou city
TEL: 0752-6668681 E-MAIL: 839689578@qq.com

CS 扫描全能王