FCC Radio Test Report

FCC ID: 2A5LO-TOZED5GCPEX21

This report concerns: Original Grant

Project No.	:	2201C050
Equipment	:	5G Wireless Router
Brand Name	:	TOZED KANGWEI
Test Model	:	ZLT X21
Series Model	:	ZLT X21Y("Y" in the model name can be A to Z)
Applicant	:	Guangzhou Tozed Kangwei Intelligent Technology Co., LTD
Address	:	13/F,Tower 1, Xiangjiang Sci-tech Innovation Center, No.37 Jinlong Road, Nansha District, Guangzhou
Manufacturer	:	Guangzhou Tozed Kangwei Intelligent Technology Co., LTD
Address	:	13/F,Tower 1, Xiangjiang Sci-tech Innovation Center, No.37 Jinlong Road, Nansha District, Guangzhou
Factory	:	Guangzhou Tozed Kangwei Intelligent Technology Co., LTD
Address	:	13/F,Tower 1, Xiangjiang Sci-tech Innovation Center, No.37 Jinlong Road, Nansha District, Guangzhou
Date of Receipt	:	Jan. 12, 2022
Date of Test	:	Jan. 13, 2022 ~ Mar. 14, 2022
Issued Date	:	Mar. 25, 2022
Report Version	:	R02
Test Sample	:	Engineering Sample No.: DG20220111219 for radiated, DG20220111225 for conducted.
Standard(s)	:	47 CFR FCC Part 27 Subpart Q 47 CFR FCC Part 2 ANSI C63.26-2015 ANSI/TIA/EIA-603-E-2016 FCC KDB 971168 D01 Power Meas License Digital Systems v03r01

The above equipment has been tested and found compliance with the requirement of the relative standards by BTL Inc.

Gabriel Zhu

Prepared by : Gabriel Zhu

Steven Lu

Approved by : Steven Lu

TESTING CERT #5123.02

Add: No. 3 Jinshagang 1st Rd. Shixia, Dalang Town Dongguan City, Guangdong 523792 People's Republic of China

Tel: +86-769-8318-3000

Web: www.newbtl.com

Declaration

BTL represents to the client that testing is done in accordance with standard procedures as applicable and that test instruments used has been calibrated with standards traceable to international standard(s) and/or national standard(s).

BTL's reports apply only to the specific samples tested under conditions. It is manufacture's responsibility to ensure that additional production units of this model are manufactured with the identical electrical and mechanical components. **BTL** shall have no liability for any declarations, inferences or generalizations drawn by the client or others from **BTL** issued reports.

The report must not be used by the client to claim product certification, approval, or endorsement by NIST, A2LA, or any agency of the U.S. Government.

This report is the confidential property of the client. As a mutual protection to the clients, the public and ourselves, the test report shall not be reproduced, except in full, without our written approval.

BTL's laboratory quality assurance procedures are in compliance with the **ISO/IEC 17025** requirements, and accredited by the conformity assessment authorities listed in this test report.

BTL is not responsible for the sampling stage, so the results only apply to the sample as received.

The information, data and test plan are provided by manufacturer which may affect the validity of results, so it is manufacturer's responsibility to ensure that the apparatus meets the essential requirements of applied standards and in all the possible configurations as representative of its intended use.

Limitation

For the use of the authority's logo is limited unless the Test Standard(s)/Scope(s)/Item(s) mentioned in this test report is (are) included in the conformity assessment authorities acceptance respective.
Please note that the measurement uncertainty is provided for informational purpose only and is not use in determining the Pass/Fail results.

Table of Contents Page

REPORT ISSUED HISTORY 5

1 . SUMMARY OF TEST RESULTS 6

1.1 TEST FACILITY 7

1.2 MEASUREMENT UNCERTAINTY 7

1.3 TEST ENVIRONMENT CONDITIONS 8

2 . GENERAL INFORMATION 9

2.1 GENERAL DESCRIPTION OF EUT 9

2.2 DESCRIPTION OF TEST MODES 12

2.3 BLOCK DIGRAM SHOWING THECONFIGURATIONOFSYSTEMTESTED 14

2.4 DESCRIPTION OF SUPPORT UNITS 14

3 . TEST RESULT 15

3.1 OUTPUT POWER MEASUREMENT 15

3.1.1 LIMIT 15

3.1.2 TEST PROCEDURE 15

3.1.3 TEST SETUP LAYOUT 15

3.1.4 TEST DEVIATION 15

3.1.5 TEST RESULTS 15

3.2 OCCUPIED BANDWIDTH MEASUREMENT 16

3.2.1 TEST PROCEDURE 16

3.2.2 TEST SETUP LAYOUT 16

3.2.3 TEST DEVIATION 16

3.2.4 TEST RESULTS 16

3.3 CONDUCTED SPURIOUS EMISSIONS MEASUREMENT 17

3.3.1 LIMIT 17

3.3.2 TEST PROCEDURES 17

3.3.3 TEST SETUP LAYOUT 17

3.3.4 TEST DEVIATION 17

3.3.5 TEST RESULTS 17

3.4 RADIATED SPURIOUS EMISSIONS MEASUREMENT 18

3.4.1 LIMIT 18

3.4.2 TEST PROCEDURES 18

3.4.3 TEST SETUP LAYOUT 19

3.4.4 TEST RESULTS (9KHZ TO 30MHZ) 20

3.4.5 TEST RESULTS (30MHZ TO 1000MHZ) 20

3.4.6 TEST RESULTS (ABOVE 1000MHZ) 20

3.5 BAND EDGE MEASUREMENT 21

3.5.1 LIMIT 21

3.5.2 TEST PROCEDURES 21

3.5.3 TEST SETUP LAYOUT 21

Table of Contents Page

3.5.4 TEST DEVIATION 21
3.5.5 TEST RESULTS 21
3.6 PEAK TO AVERAGE RATIO MEASUREMENT 22
3.6.1 LIMIT 22
3.6.2 TEST PROCEDURES 22
3.6.3 TEST SETUP LAYOUT 22
3.6.4 TEST DEVIATION 22
3.6.5 TEST RESULTS 22
3.7 FREQUENCY STABILITY MEASUREMENT 23
3.7.1 LIMIT 23
3.7.2 TEST PROCEDURES 23
3.7.3 TEST SETUP LAYOUT 23
3.7.4 TEST DEVIATION 23
3.7.5 TEST RESULTS 23
4. LIST OF MEASUREMENT EQUIPMENTS 24
5. EUT TEST PHOTO 26
APPENDIX A - OUTPUT POWER 29
APPENDIX B - OCCUPIED BANDWIDTH 114
APPENDIX C - CONDUCTED SPURIOUS EMISSIONS 125
APPENDIX D - RADIATED SPURIOUS EMISSIONS (9KHZ TO 30MHZ) 129
APPENDIX E - RADIATED SPURIOUS EMISSIONS (30MHZ TO 1GHZ) 131
APPENDIX F - RADIATED SPURIOUS EMISSIONS (ABOVE 1GHZ) 135
APPENDIX G - BAND EDGE 139
APPENDIX H - PEAK TO AVERAGE RATIO 143
APPENDIX I - FREQUENCY STABILITY 145

REPORT ISSUED HISTORY

Report No.	Version	Description	Issued Date	Note
BTL-FCCP-4-2201C050	R00	Original Report.	Mar. 17, 2022	Invalid
BTL-FCCP-4-2201C050	R01	Added a note 5 of page 13.	Mar. 24, 2022	Invalid
BTL-FCCP-4-2201C050	R02	Removed the note 5 of page 13.	Mar. 25, 2022	Valid

1. SUMMARY OF TEST RESULTS

Test procedures according to the technical standard(s):

FCC Part 27 Subpart Q & Part 2			
Standard(s) Section	**Test Item**	**Judgment**	**Remark**
2.1046	Output Power	PASS	------
27.50(k)(3)	Equivalent Isotropic Radiated Power	PASS	------
2.1049	Occupied Bandwidth	PASS	------
2.1051 27.53(n)(2)	Conducted Spurious Emissions	PASS	------
2.1051 27.53(n)(2)	Radiated Spurious Emissions	PASS	------
2.1051 27.53(n)(2)	Band Edge Measurements	PASS	------
27.50(k)(4)	Peak To Average Ratio	PASS	------
2.1055 27.54	Frequency Stability	PASS	------

Note:

(1) “N/A” denotes test is not applicable in this test report.

1.1 TEST FACILITY

The test facilities used to collect the test data of radiated in this report is at the location of No. 3 Jinshagang 1st Rd. Shixia, Dalang Town, Dongguan City, Guangdong, People's Republic of China.

The test facilities used to collect the test data of conduted in this report is at the location of Room 108, Building 2, No.1, Yile Road, Songshan Lake Zone, Dongguan City, Guangdong, People's Republic of China.
BTL's Test Firm Registration Number for FCC: 357015
BTL's Designation Number for FCC: CN1240

1.2 MEASUREMENT UNCERTAINTY

ISO/IEC 17025 requires that an estimate of the measurement uncertainties associated with the emissions test results be included in the report. The measurement uncertainties given below are based on a 95% confidence level (based on a coverage factor (k=2))

The BTL measurement uncertainty as below table:

A. Radiated Measurement:

Test Site	Method	Measurement Frequency Range	U,(dB)
DG-CB01	CISPR	9kHz ~ 30MHz	2.36

Test Site	Method	Measurement Frequency Range	Ant. H / V	U,(dB)
DG-CB03 (3m)	CISPR	30MHz ~ 200MHz	V	4.36
		30MHz ~ 200MHz	H	3.32
		200MHz ~ 1,000MHz	V	4.08
		200MHz ~ 1,000MHz	H	3.96

Test Site	Method	Measurement Frequency Range	U,(dB)
DG-CB03 (3m)	CISPR	1GHz ~ 6GHz	3.80
		6GHz ~ 18GHz	4.82

Test Site	Method	Measurement Frequency Range	U,(dB)
DG-CB03 (1m)	CISPR	18GHz ~ 26.5GHz	3.62
		26.5GHz ~ 40GHz	4.00

B. Other Measurement:

Parameter	Uncertainty
Spectrum Bandwidth	±3.8 %
Maximum Output Power	±0.95 dB
Power Spectral Density	±0.86 dB
Frequency Stability	±0.16 dB
Temperature	±0.08 °C
Time	±0.58 %
Supply voltages	±0.3 %

Note: Unless specifically mentioned, the uncertainty of measurement has not been taken into account to declare the compliance or non-compliance to the specification.

1.3 TEST ENVIRONMENT CONDITIONS

Test Item	Temperature	Humidity	Test Voltage	Tested By
Output Power & ERP	21°C	40%	DC 12V	Rick Liao
Occupied Bandwidth	21°C	40%	DC 12V	Rick Liao
Conducted Spurious Emissions	21°C	40%	DC 12V	Rick Liao
Radiated Spurious Emissions (9 kHz to 30 MHz)	17°C	56%	AC 120V/60Hz	Jakyri Wen
Radiated Spurious Emissions (30 MHz to 1000 MHz)	17°C	56%	AC 120V/60Hz	Jakyri Wen
Radiated Spurious Emissions (Above 1000 MHz)	17°C	56%	AC 120V/60Hz	Jakyri Wen
Band Edge	21°C	40%	DC 12V	Rick Liao
Peak to Average Ratio	21°C	40%	DC 12V	Rick Liao
Frequency Stability	Normal & Extreme	40%	Normal & Extreme	Rick Liao

2. GENERAL INFORMATION

2.1 GENERAL DESCRIPTION OF EUT

Equipment	5G Wireless Router	
Brand Name	TOZED KANGWEI	
Test Model	ZLT X21	
Series Model	ZLT X21Y("Y" in the model name can be A to Z)	
Model Difference(s)	There is no difference except model difference, shell color and silk screen change.	
Hardware Version	TZ7.823.411	
Software Version	1.2.17	
Power Source	DC voltage supplied from AC adapter. Model: GS-P120200E334	
Power Rating	I/P: 100-240V ~ 50/60Hz 0.8A O/P: 12V ⎓ 2A	
Radio System Type	SA&NSA	
Operation Bands	SA: n77, n78	
	DC 7A_n78A, DC 66A_n78A	
SCS	30KHz	
Bandwidth	10MHz, 15MHz, 20MHz, 30MHz, 40MHz, 50MHz, 60MHz, 80MHz, 90MHz,100MHz	
Modulation Type	DFT-s-OFDM PI/2 BPSK	
	DFT-s-OFDM QPSK	CP-OFDM QPSK
	DFT-s-OFDM 16QAM	CP-OFDM 16QAM
	DFT-s-OFDM 64QAM	CP-OFDM 64QAM
	DFT-s-OFDM 256QAM	CP-OFDM 256QAM
IMEI No.	Radiated	355882561000078
	Conducted	355882561000177
Power Class	2, 3	

Max. E.I.R.P (dBm)

Band	BW(MHz)	PI/2 BPSK	QPSK	16QAM	64QAM	256QAM
n77	10MHz	26.64	26.57	25.45	23.44	22.03
	15MHz	26.76	26.71	25.75	23.68	22.42
	20MHz	26.68	26.61	25.68	23.53	22.57
	30MHz	27.12	27.07	26.02	24.07	23.37
	40MHz	26.81	26.75	25.76	23.72	22.83
	50MHz	26.36	26.31	25.35	23.25	22.34
	60MHz	26.45	26.39	25.52	23.50	22.65
	80MHz	26.51	26.46	25.43	23.49	22.85
	90MHz	27.17	27.15	26.25	24.29	23.50
	100MHz	26.27	26.21	25.23	23.30	22.56
n78	10MHz	27.16	27.22	25.89	24.05	22.05
	15MHz	27.41	27.35	26.17	24.28	22.44
	20MHz	27.25	27.18	26.07	24.11	22.41
	30MHz	27.83	27.81	26.69	24.55	23.19
	40MHz	27.62	27.56	26.42	24.54	22.86
	50MHz	27.27	27.21	26.02	24.11	22.26
	60MHz	27.27	27.20	26.23	24.10	22.65
	80MHz	27.44	27.38	26.40	24.49	22.53
	90MHz	27.99	27.98	27.05	24.91	23.49
	100MHz	27.17	27.10	26.13	24.01	22.51

Note:

1. For a more detailed features description, please refer to the manufacturer's specifications or the user's manual.

2. Channel List:

NR n77 & n78(UL/DL: 3450-3550MHz)			
Test Frequency ID	Bandwidth (MHz)	EARFCN	Frequency (UL and DL) (MHz)
Low Range	10	630334	3455.01
	15	630500	3457.5
	20	630668	3460.02
	30	631000	3465.00
	40	631334	3470.01
	50	631668	3475.02
	60	632000	3480.00
	80	632668	3490.02
	90	633000	3495.00
	100	-	-
Mid Range	10/15/20/30/40/50/60/80/90/100	633334	3500.01
High Range	10	636332	3544.98
	15	636166	3542.49
	20	636000	3540.00
	30	635666	3534.99
	40	635332	3529.98
	50	635000	3525.00
	60	634666	3519.99
	80	634000	3510.00
	90	633666	3504.99
	100	-	-

3. Table for Filed Antenna:

Brand	Model Name	Antenna Type	Connector	Gain (dBi)	Note
ShenZhen NQI network communication ltd	NQI-X21G-5G/WF(4)-ASM-V01	PCB	IPEX	0.89	n77&n78(Ant 3)
				0.81	n77&n78(Ant 6)

Note:

1. This EUT supports MIMO, any transmit signals are correlated with each other, so Directional gain=10log[$(10^{G1/20}+10^{G2/20}+...10^{GN/20})^2$/N]dBi, that is Directional gain=10log[$(10^{0.89/20}+10^{0.81/20})^2$/2]dBi =3.86.
2. SISO mode only supports Ant 3.
3. The antenna gain is provided by the manufacturer.

4. RB allocation:

Bandwidth	100	90	80	60	50	40	30	25	20	15	10
SCS 30KHz CP-OFDM	RB Size/ Offset	RB Size/ Offset	RB Size/ Offset	RB Size/ Offset	RB Size/ Offset	RB Size/ Offset	RB Size/ Offset	RB Size/ Offset	RB Size/ Offset	RB Size/ Offset	RB Size/ Offset
Edge_1RB _Left	1/0	1/0	1/0	1/0	1/0	1/0	1/0	1/0	1/0	1/0	1/0
Inner_1RB _Left	1/1	1/1	1/1	1/1	1/1	1/1	1/1	1/1	1/1	1/1	1/1
Inner_1RB _Right	1/271	1/243	1/215	1/160	1/131	1/104	1/76	1/63	1/49	1/36	1/22
Edge_1RB _Right	1/272	1/244	1/216	1/161	1/132	1/105	1/77	1/64	1/50	1/37	1/23
Edge_Full _Left	2/0	2/0	2/0	2/0	2/0	2/0	2/0	2/0	2/0	2/0	2/0
Edge_Full _Right	2/271	2/243	2/215	2/160	2/131	2/104	2/76	2/63	2/49	2/36	2/22
Inner _Full	137/68	123/61	109/54	81/40	67/33	53/26	39/19	33/16	25/12	19/9	12/6
Outer _Full	273/0	245/0	217/0	162/0	133/0	106/0	78/0	65/0	51/0	36/0	24/0

Bandwidth	100	90	80	60	50	40	30	25	20	15	10
SCS 30KHz DFT-s-OFDM	RB Size/ Offset	RB Size/ Offset	RB Size/ Offset	RB Size/ Offset	RB Size/ Offset	RB Size/ Offset	RB Size/ Offset	RB Size/ Offset	RB Size/ Offset	RB Size/ Offset	RB Size/ Offset
Edge_1RB _Left	1/0	1/0	1/0	1/0	1/0	1/0	1/0	1/0	1/0	1/0	1/0
Inner_1RB _Left	1/1	1/1	1/1	1/1	1/1	1/1	1/1	1/1	1/1	1/1	1/0
Inner_1RB _Right	1/271	1/243	1/215	1/160	1/131	1/104	1/76	1/63	1/49	1/36	1/22
Edge_1RB _Right	1/272	1/244	1/216	1/161	1/132	1/105	1/77	1/64	1/50	1/37	1/23
Edge_Full _Left	2/0	2/0	2/0	2/0	2/0	2/0	2/0	2/0	2/0	2/0	2/0
Edge_Full _Right	2/271	2/243	2/215	2/160	2/131	2/104	2/76	2/63	2/49	2/36	2/22
Inner _Full	135/67	120/60	108/54	81/40	64/32	50/25	36/18	32/16	25/12	18/9	12/6
Outer _Full	270/0	240/0	216/0	162/0	128/0	100/0	75/0	64/0	50/0	38/0	24/0

2.2 DESCRIPTION OF TEST MODES

Following mode(s) is (were) found to be the worst case(s) and selected for the final test.

NR n77				
Test Item	Tested Channel	Channel Bandwidth	Modulation	RB allocation
Output Power & EIRP	630334, 633334, 636332	10MHz	DFT-s-OFDM PI/2 BPSK, DFT-s-OFDM QPSK, DFT-s-OFDM 16QAM, DFT-s-OFDM 64QAM, DFT-s-OFDM 256QAM CP-OFDM QPSK, CP-OFDM 16QAM, CP-OFDM 64QAM, CP-OFDM 256QAM	Inner 1RB Left Inner 1RB Right Inner Full
	630500, 633334, 636166	15MHz		
	630668, 633334, 636000	20MHz		
	631000, 633334, 635666	30MHz		
	631334, 633334, 635332	40MHz		
	631668, 633334, 635000	50MHz		
	632000, 633334, 634666	60MHz		
	632668, 633334, 634000	80MHz		
	633000, 633334, 633666	90MHz		
	633334	100MHz		
Occupied Bandwidth	-	-	-	-
Conducted Spurious Emission	-	-	-	-
Radiated Spurious Emission	633334	10MHz	DFT-s-OFDM QPSK	1RB # 0
	633334	100MHz		
Band Edge	-	-	-	-
Peak To Average Ratio	-	-	-	-
Frequency Stability	-	-	-	-

NR n78				
Test Item	Tested Channel	Channel Bandwidth	Modulation	RB allocation
Output Power & EIRP	630334, 633334, 636332	10MHz	DFT-s-OFDM PI/2 BPSK, DFT-s-OFDM QPSK, DFT-s-OFDM 16QAM, DFT-s-OFDM 64QAM, DFT-s-OFDM 256QAM CP-OFDM QPSK, CP-OFDM 16QAM, CP-OFDM 64QAM, CP-OFDM 256QAM	Inner 1RB Left Inner 1RB Right Inner Full
	630500, 633334, 636166	15MHz		
	630668, 633334, 636000	20MHz		
	631000, 633334, 635666	30MHz		
	631334, 633334, 635332	40MHz		
	631668, 633334, 635000	50MHz		
	632000, 633334, 634666	60MHz		
	632668, 633334, 634000	80MHz		
	633000, 633334, 633666	90MHz		
	633334	100MHz		
Occupied Bandwidth	633334	10MHz	DFT-s-OFDM PI/2 BPSK, DFT-s-OFDM QPSK, DFT-s-OFDM 16QAM, DFT-s-OFDM 64QAM, DFT-s-OFDM 256QAM CP-OFDM QPSK, CP-OFDM 16QAM, CP-OFDM 64QAM, CP-OFDM 256QAM	Outer Full
	633334	15MHz		
	633334	20MHz		
	633334	30MHz		
	633334	40MHz		
	633334	50MHz		
	633334	60MHz		
	633334	80MHz		
	633334	90MHz		
	633334	100MHz		
Conducted Spurious Emission	630334, 633334, 636332	10MHz	DFT-s-OFDM PI/2 BPSK, DFT-s-OFDM QPSK	1RB # 0
	631668, 633334, 635000	50MHz		
	633334	100MHz		
Radiated Spurious Emission	633334	10MHz	DFT-s-OFDM QPSK	1RB # 0
	633334	100MHz		
Band Edge	630334, 636332	10MHz	DFT-s-OFDM PI/2 BPSK, DFT-s-OFDM QPSK	Edge 1RB Left Edge 1RB Right Outer Full
	631668, 635000	50MHz		
	633334	100MHz		
Peak To Average Ratio	630334, 633334, 636332	10MHz	DFT-s-OFDM PI/2 BPSK, DFT-s-OFDM QPSK	Edge 1RB Left Outer Full
Frequency Stability	630334, 636332	10MHz	DFT-s-OFDM QPSK	Outer Full

Note:
1. Since the power of DFT-S-OFDM modulation mode is higher than that of CP-OFMD, and the power of PI/2 BPSK and QPSK is greater than that of other modulation modes, we chose DFT-S-OFDM PI/2 BPSK and DFT-S-OFDM QPSK modulation mode to test other items except power and OBW.
2. Since n78 frequency band covers n77 and the power of n78 is greater than n77, only n78 is performed and recorded in this report.
3. The equipment supports SA and NSA modes for n77 and n78. We tested the maximum power of SA and NSA, and the maximum power of SA is the worst case. Therefore, all conducted items are executed in SA mode. NSA only evaluates the worst configuration of SA and no deterioration, so the report only records SA data.
4. Radiated Spurious Emission was assessed for low, middle, high channels and all TX antennas, with only the worst data recorded in the report.

2.3 BLOCK DIGRAM SHOWING THECONFIGURATIONOFSYSTEMTESTED

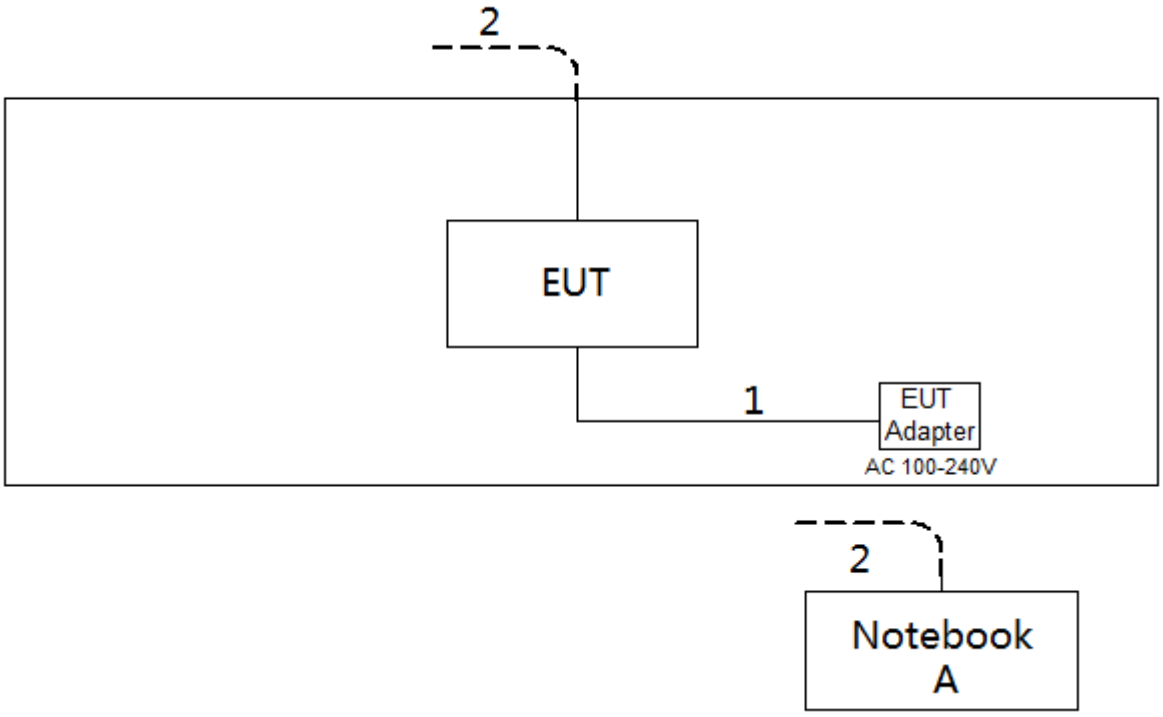

2.4 DESCRIPTION OF SUPPORT UNITS

The EUT has been tested as an independent unit together with other necessary accessories or support units. The following support units or accessories were used to form a representative test configuration during the tests.

Item	Equipment	Mfr/Brand	Model/Type No.	Series No.
A	Notebook	Dell	Inspiron 15-7559	N/A

Item	Cable Type	Shielded Type	Ferrite Core	Length
1	DC Cable	NO	NO	1.5m
2	RJ45 Cable	NO	NO	10m

3. TEST RESULT

3.1 OUTPUT POWER MEASUREMENT

3.1.1 LIMIT

Mobile devices are limited to 1Watt (30 dBm) EIRP.

3.1.2 TEST PROCEDURE

The testing follows FCC KDB 971168 v03r01 Section 5.

EIRP:

EIRP = Output Power + Antenan gain

ERP:

ERP = EIRP-2.15

Output Power:

The EUT was set up for the maximum power with NR link data modulation and link up with simulator. Set the EUT to transmit under low, middle and high channel and record the power level shown on simulator.

3.1.3 TEST SETUP LAYOUT

Output Power Measurement

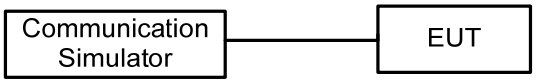

3.1.4 TEST DEVIATION

No deviation

3.1.5 TEST RESULTS

Please refer to the APPENDIX A.

3.2 OCCUPIED BANDWIDTH MEASUREMENT

3.2.1 TEST PROCEDURE

The testing follows FCC KDB 971168 v03r01 Section 4.

1. The EUT makes a call to the communication simulator. All measurements were done at low, middle and high operational frequency range. The communication simulator station system controlled a EUT to export maximum output power under transmission mode and specific channel frequency. Use OBW measurement function of Spectrum analyzer to measure 99 % occupied bandwidth and 26dB bandwidth.
2. The EUT was connected to spectrum analyzer and system simulator via a power divider.
3. RBW=(1% ~ 5%)*EBW
   VBW⩾3* RBW
4. Set spectrum analyzer with Peak detector.

3.2.2 TEST SETUP LAYOUT

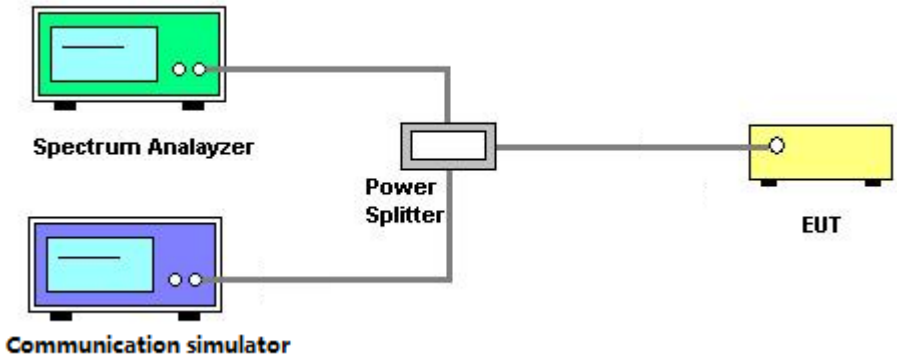

3.2.3 TEST DEVIATION

No deviation

3.2.4 TEST RESULTS

Please refer to the APPENDIX B.

3.3 CONDUCTED SPURIOUS EMISSIONS MEASUREMENT

3.3.1 LIMIT

For mobile operations in the 3450-3550 MHz band, the conducted power of any emission outside the licensee's authorized bandwidth shall not exceed −13 dBm/MHz.

3.3.2 TEST PROCEDURES

The testing follows FCC KDB 971168 v03r01 Section 6.

1. The EUT was connected to spectrum analyzer and system simulator via a power divider.
2. The conducted spurious emission of middle channel for the highest RF powers were measured. Set RBW=1MHz.
3. Set spectrum analyzer with Average detector and trace mode with trace average.
4. The RF fundamental frequency should be excluded against the limit line in the operating frequency band.

3.3.3 TEST SETUP LAYOUT

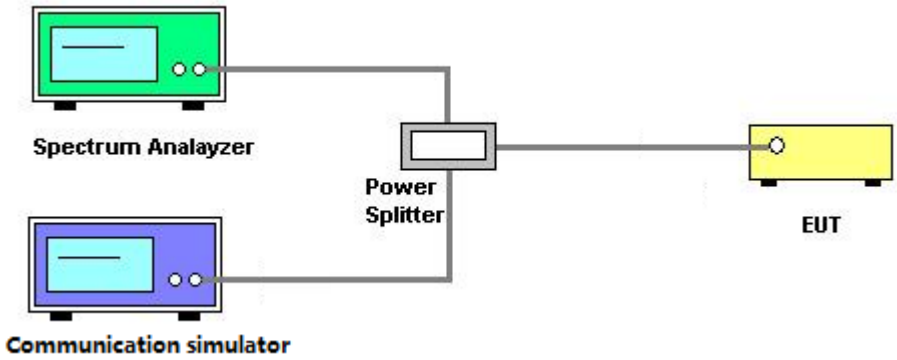

3.3.4 TEST DEVIATION

No deviation

3.3.5 TEST RESULTS

Please refer to the APPENDIX C.

3.4 RADIATED SPURIOUS EMISSIONS MEASUREMENT

3.4.1 LIMIT

For mobile operations in the 3450-3550 MHz band, the conducted power of any emission outside the licensee's authorized bandwidth shall not exceed −13 dBm/MHz.

3.4.2 TEST PROCEDURES

The testing follows FCC KDB 971168 v03r01 Section 6.2.

1. In the semi-anechoic chamber, EUT placed on the 0.8m height of Turn Table, rotated the table around 360 degrees to search the maximum radiation power and receiver antenna shall be rotated vertical and horizontal polarization and moved height from 1m to 4m to find the maximum polar radiated power. The “Read Value” is the spectrum reading the maximum power value.
2. The substitution horn antenna is substituted for EUT at the same position and signals generator export the CW signal to the substitution antenna via a TX cable. Rotated the Turn Table and moved receiving antenna to find the maximum radiation power. Adjust output power level of S.G to get a Value of spectrum reading equal to “Read Value “ of step a. Record the power level of S.G
3. EIRP = Output power level of S.G – TX cable loss + Antenna gain of substitution horn.
4. ERP can be calculated form EIRP by subtracting the gain of dipole, ERP = EIPR - 2.15dBi.
5. The resolution bandwidth and video bandwidth of test receiver/spectrum analyzer is 1MHz/3MHz.

3.4.3 TEST SETUP LAYOUT

Below 30MHz

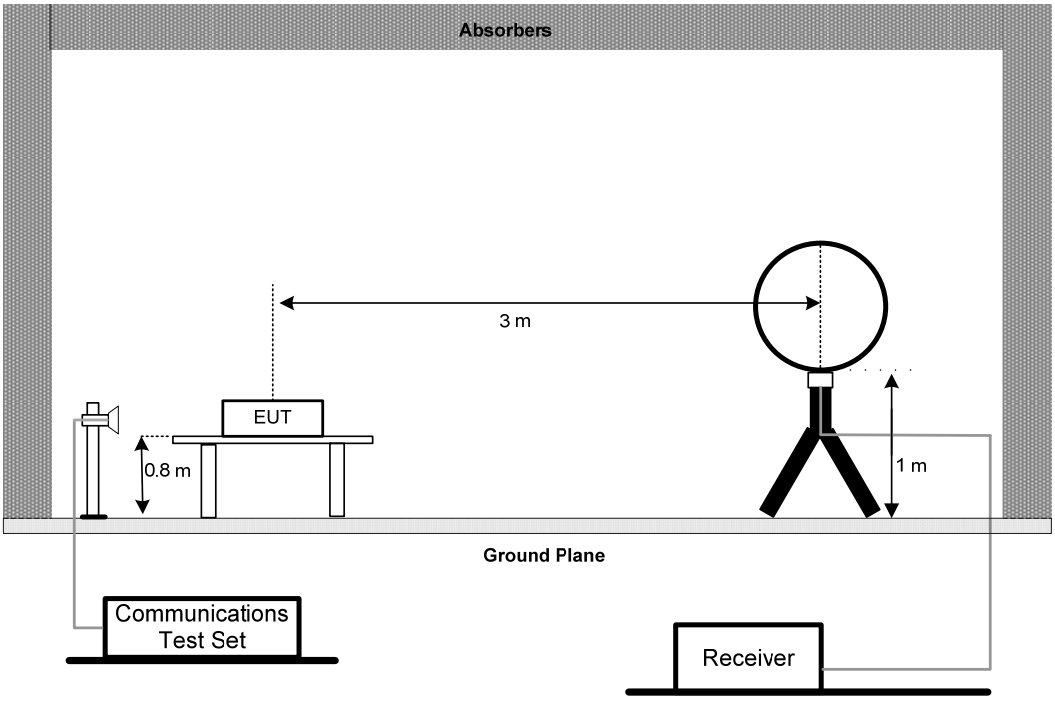

30MHz to 1GHz

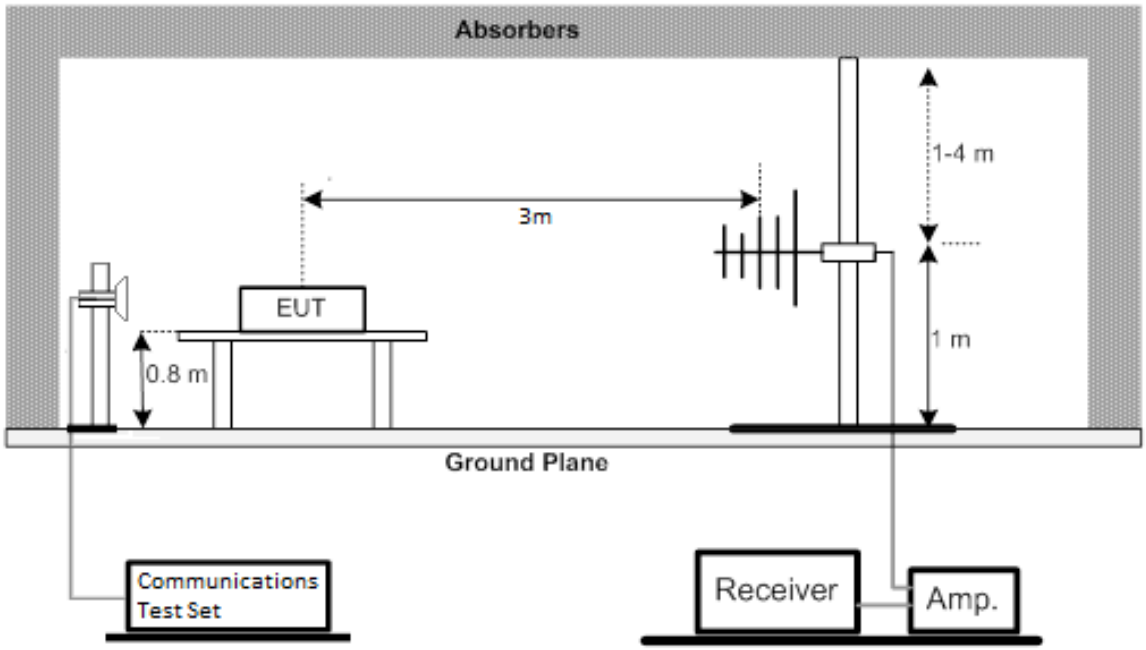

Above 1GHz

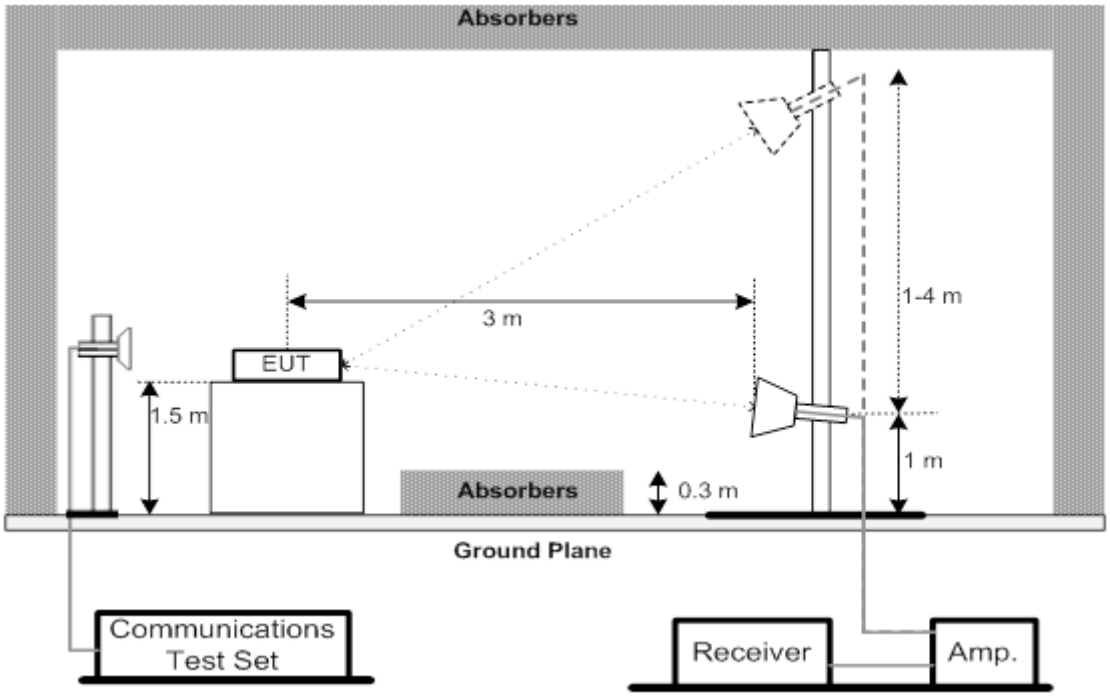

3.4.4 TEST RESULTS (9KHZ TO 30MHZ)

Please refer to the APPENDIX D.

3.4.5 TEST RESULTS (30MHZ TO 1000MHZ)

Please refer to the APPENDIX E.

3.4.6 TEST RESULTS (ABOVE 1000MHZ)

Please refer to the APPENDIX F.

3.5 BAND EDGE MEASUREMENT

3.5.1 LIMIT

For mobile operations in the 3450-3550 MHz band, the conducted power of any emission outside the licensee's authorized bandwidth shall not exceed −13 dBm/MHz.

3.5.2 TEST PROCEDURES

The testing follows FCC KDB 971168 v03r01 Section 6.

1. All measurements were done at low and high operational frequency range.
2. Measurement instrumentation employing a resolution bandwidth of 1 megahertz or greater. However, in the 1 megahertz bands immediately outside and adjacent to the licensee's frequency block, a resolution bandwidth of at least one percent of the emission bandwidth of the fundamental emission of the transmitter may be employed, but limited to a maximum of 200 kHz. In the bands between 1 and 5 MHz removed from the licensee's frequency block, the minimum resolution bandwidth for the measurement shall be 500 kHz.
3. Record the max trace plot into the test report.

3.5.3 TEST SETUP LAYOUT

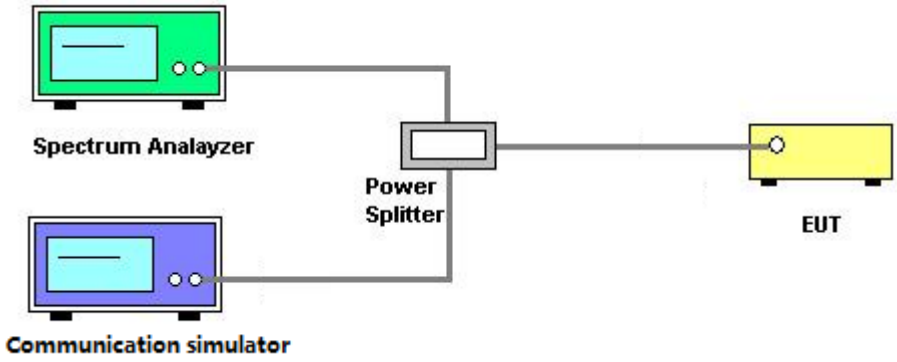

3.5.4 TEST DEVIATION

No deviation

3.5.5 TEST RESULTS

Please refer to the APPENDIX G.

3.6 PEAK TO AVERAGE RATIO MEASUREMENT

3.6.1 LIMIT

In measuring transmissions in this band using an average power technique, the peak to-average ratio (PAR) of the transmission may not exceed 13 dB.

3.6.2 TEST PROCEDURES

The testing follows FCC KDB 971168 v03r01 Section 5.7.

1. Set resolution/measurement bandwidth ≥ signal's occupied bandwidth;
2. Set the number of counts to a value that stabilizes the measured CCDF curve;
3. Record the maximum PAPR level associated with a probability of 0.1%.

3.6.3 TEST SETUP LAYOUT

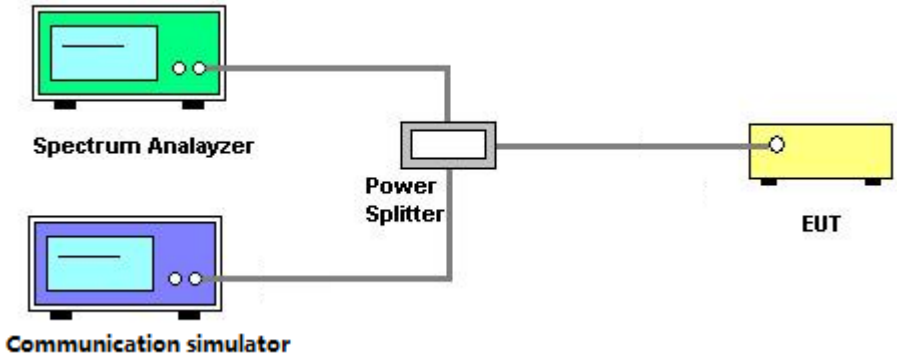

3.6.4 TEST DEVIATION

No deviation

3.6.5 TEST RESULTS

Please refer to the APPENDIX H.

3.7 FREQUENCY STABILITY MEASUREMENT

3.7.1 LIMIT

The frequency stability shall be sufficient to ensure that the fundamental emission stays within the authorized frequency block.

3.7.2 TEST PROCEDURES

The testing follows ANSI C63.26-2015 Section 5.6.

1. A reference point shall be established at the applicable unwanted emissions limit using a RBW equal to the RBW required by the unwantedemissions specification of the applicable regulatory standard. These reference points measuredusing the lowest and highest channel of operation shall be identified as f L and f H respectively. The worst-case frequency offset determined in the above methods shall be added or subtracted from the values of f L and f H and the resulting frequencies must remain within the band.
2. The EUT was set up in the thermal chamber and connected with the system simulator.
3. With power OFF, the temperature was decreased to -30°C and the EUT was stabilized before testing. Power was applied and the maximum change in frequency was recorded within one minute.
4. With power OFF, the temperature was raised in 10°C step up to 50°C. The EUT was stabilized at each step for at least half an hour. Power was applied and the maximum frequency change was recorded within one minute.

3.7.3 TEST SETUP LAYOUT

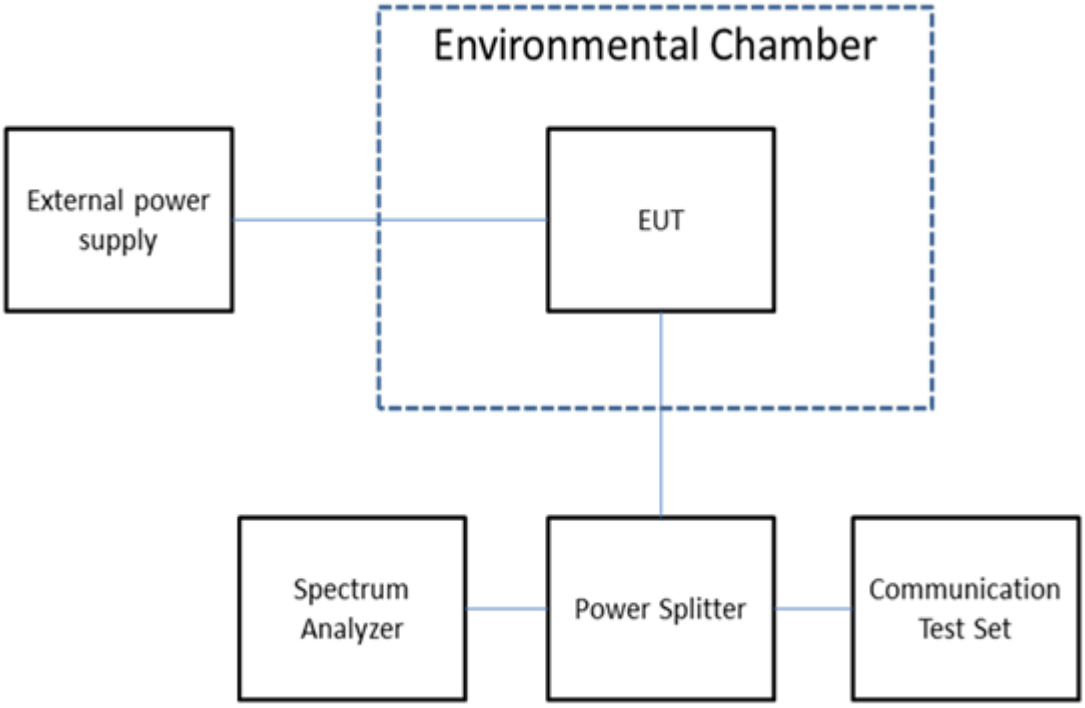

3.7.4 TEST DEVIATION

No deviation

3.7.5 TEST RESULTS

Please refer to the APPENDIX I.

4. LIST OF MEASUREMENT EQUIPMENTS

Radiated Emissions - 9 kHz to 30 MHz					
Item	Kind of Equipment	Manufacturer	Type No.	Serial No.	Calibrated until
1	MXE EMI Receiver	Keysight	N9038A	MY56400091	Jan. 22, 2023
2	Antenna	EM	EM-6876-1	230	Apr. 28, 2022
3	Cable	N/A	RG 213/U (9kHz~1GHz)	N/A	May 27, 2022
4	Measurement Software	Farad	EZ-EMC Ver.NB-03A1-01	N/A	N/A
5	SP9500 5G Wireless Test Platform	StarPoint	SP9500	SP9500-20335	Apr. 19, 2022
6	966 Chamber Room	ETS	9*6*6	N/A	Jul. 17, 2022

Radiated Emissions - 30 MHz to 1 GHz					
Item	Kind of Equipment	Manufacturer	Type No.	Serial No.	Calibrated until
1	Trilog-Broadband Antenna	Schwarzbeck	VULB9168	586	Feb. 11, 2023
2	Amplifier	HP	8447D	2944A08742	Jan. 22, 2023
3	Cable	emci	LMR-400	N/A	Nov. 30, 2022
4	Controller	CT	SC100	N/A	N/A
5	Controller	MF	MF-7802	MF780208416	N/A
6	Receiver	Agilent	N9038A	MY52130039	Jan. 22, 2023
7	Measurement Software	Farad	EZ-EMC Ver.NB-03A1-01	N/A	N/A
8	SP9500 5G Wireless Test Platform	StarPoint	SP9500	SP9500-20335	Apr. 19, 2022
9	966 Chamber Room	RM	9*6*6	N/A	Jul. 24, 2022

Radiated Emissions - Above 1 GHz					
Item	Kind of Equipment	Manufacturer	Type No.	Serial No.	Calibrated until
1	Double Ridged Horn Antenna	ARA	DRG-118A	16554	Apr. 21, 2022
2	Broad-Band Horn Antenna	Schwarzbeck	BBHA 9170	9170319	Jun. 30, 2022
3	Amplifier	Agilent	8449B	3008A02584	Jul. 10, 2022
4	Controller	CT	SC100	N/A	N/A
5	Controller	MF	MF-7802	MF780208416	N/A
6	Receiver	Agilent	N9038A	MY52130039	Jan. 22, 2023
7	EXA Spectrum Analyzer	Keysight	N9010A	MY56480488	Jan. 22, 2023
8	Low Noise Amplifier	CONNPHY	CLN-18G40G -4330-K	619413	Jul. 16, 2022
9	Cable	Talent microwave	A81-SMAMSMAM -12.5M	N/A	Oct. 15, 2022
10	Cable	Talent microwave	A40-2.92M2.92M -2.5M	N/A	Nov. 30, 2022
11	Measurement Software	Farad	EZ-EMC Ver.NB -03A1-01	N/A	N/A
12	SP9500 5G Wireless Test Platform	StarPoint	SP9500	SP9500-20335	Apr. 19, 2022
13	966 Chamber Room	RM	9*6*6	N/A	Jul. 24, 2022

Conducted Measurement					
Item	Kind of Equipment	Manufacturer	Type No.	Serial No.	Calibrated until
1	MXA Signal Analyzer	Keysight	N9020A	MY49100060	Jul. 24, 2022
2	Power Splitter	Mini-Circuits	ZFRSC-183-S+	SF103501511S	Jul. 24, 2022
3	SP9500 5G Wireless Test Platform	StarPoint	SP9500	SP9500-20335	Jul. 24, 2022
4	Const Temp. & Humidity Chamber	Bell	BTH-50C	20170306001	Feb. 19, 2023
5*	Multi-output DC Power Supply	GW Instek	GPC-3030DN	EK880675	Jul. 25, 2023
6	Signal Analyzer	R&S	FSQ-26	200822	Feb. 19, 2023

Remark: ”N/A” denotes no model name, serial no. or calibration specified.
Except * item, all calibration period of equipment list is one year.
“*” calibration period of equipment list is three year.

5. EUT TEST PHOTO

Radiated Emissions Test Photos

9 kHz to 30 MHz

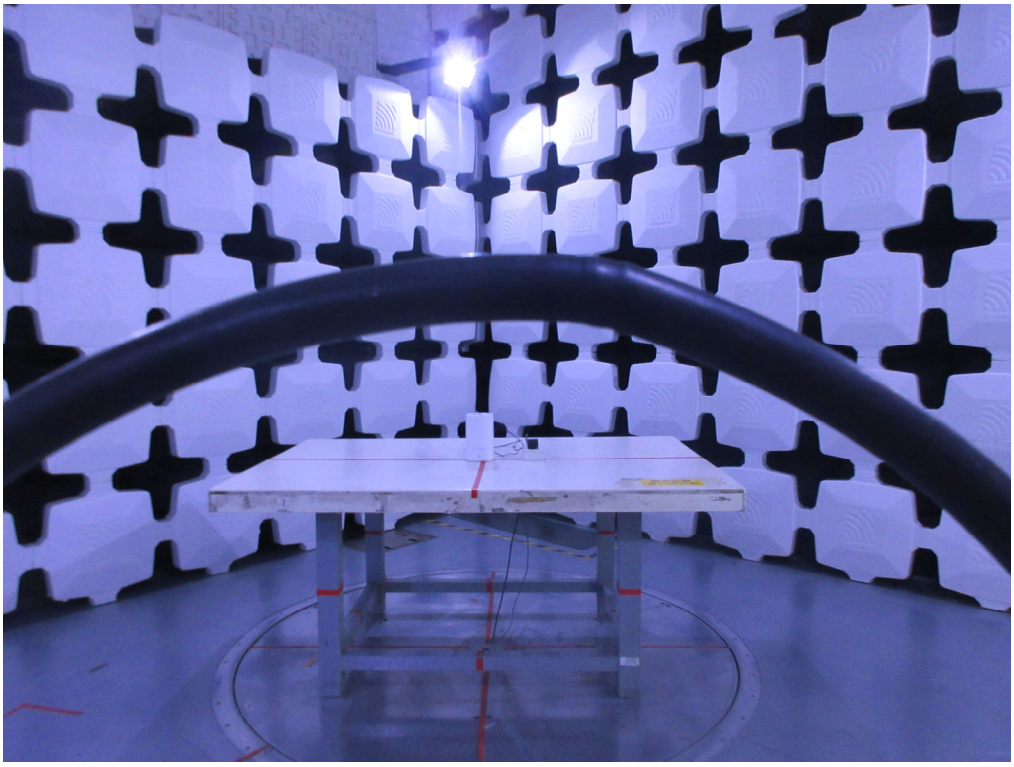

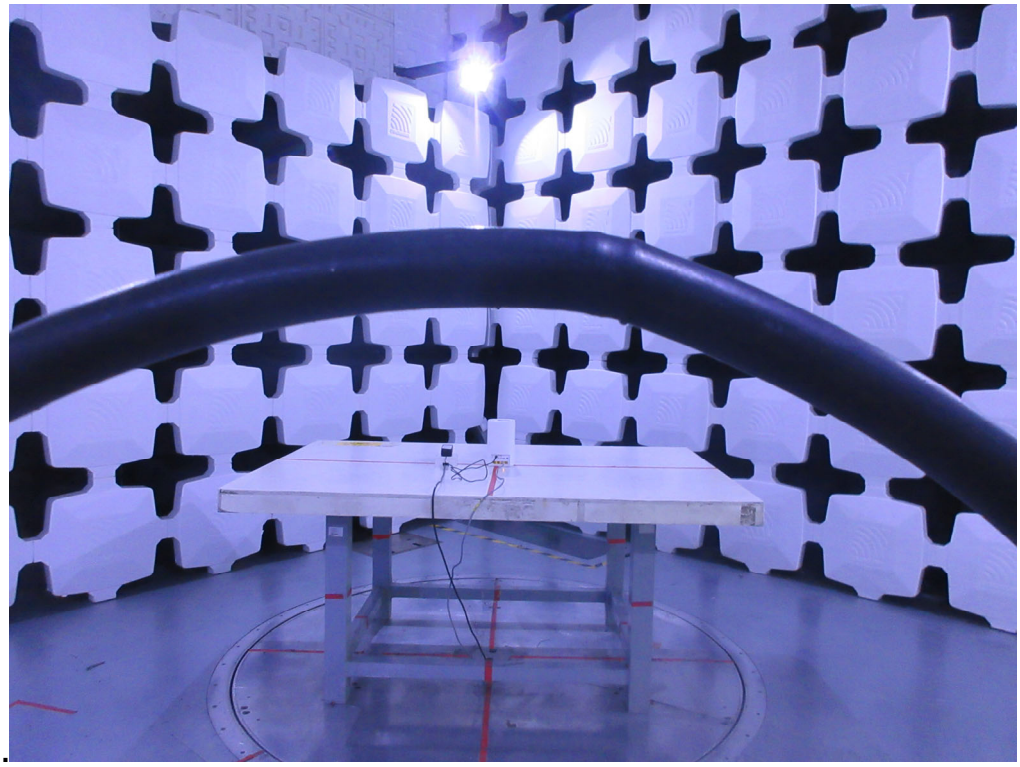

Radiated Emissions Test Photos

30 MHz to 1 GHz

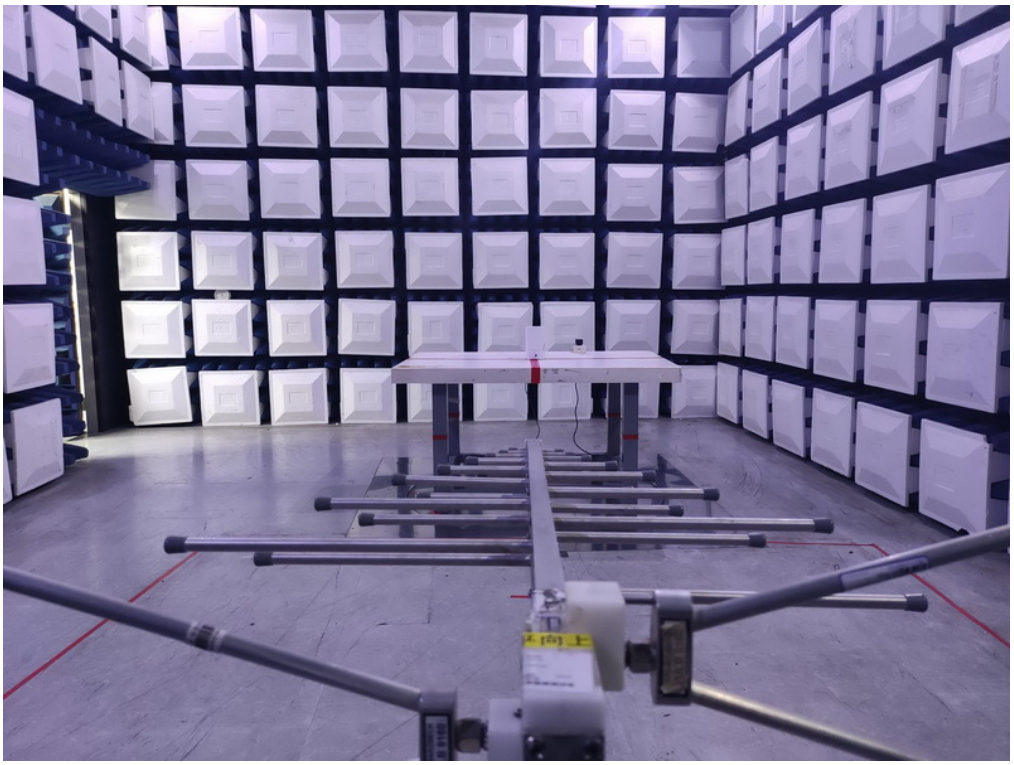

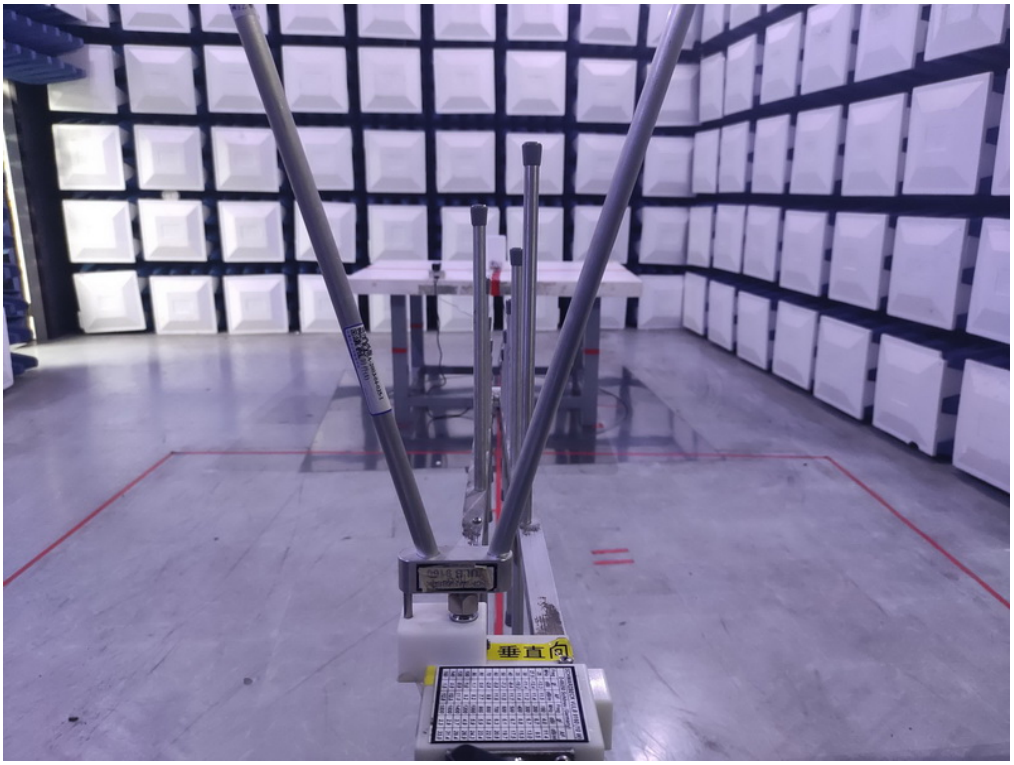

Radiated Emissions Test Photos

Above 1 GHz

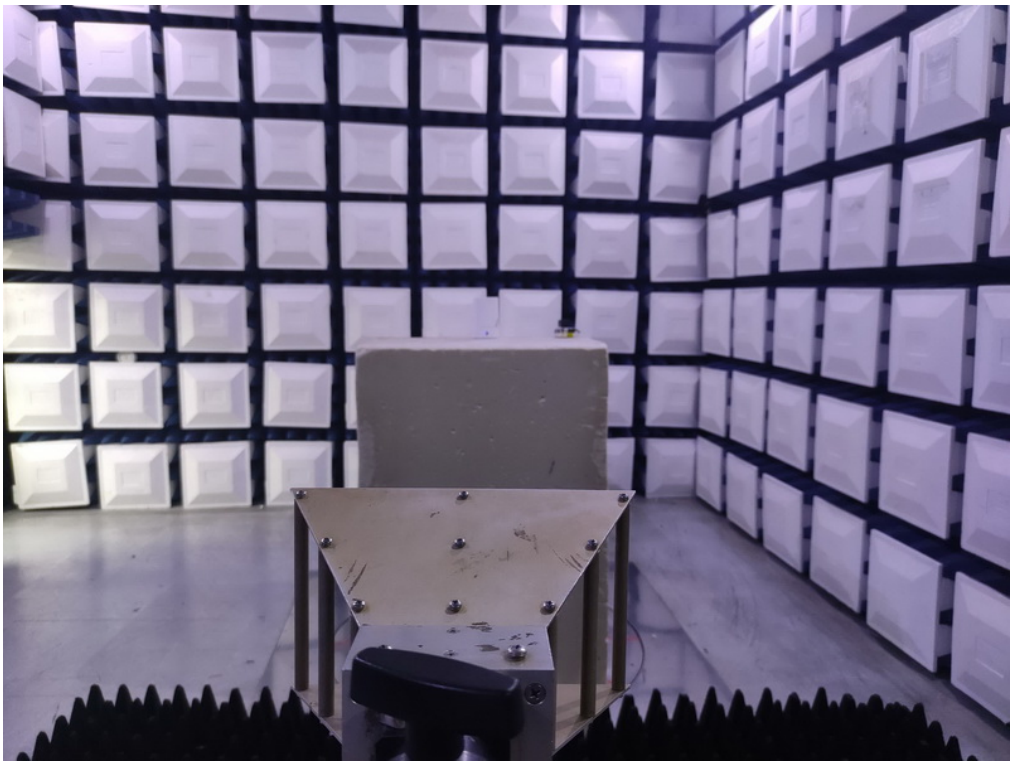

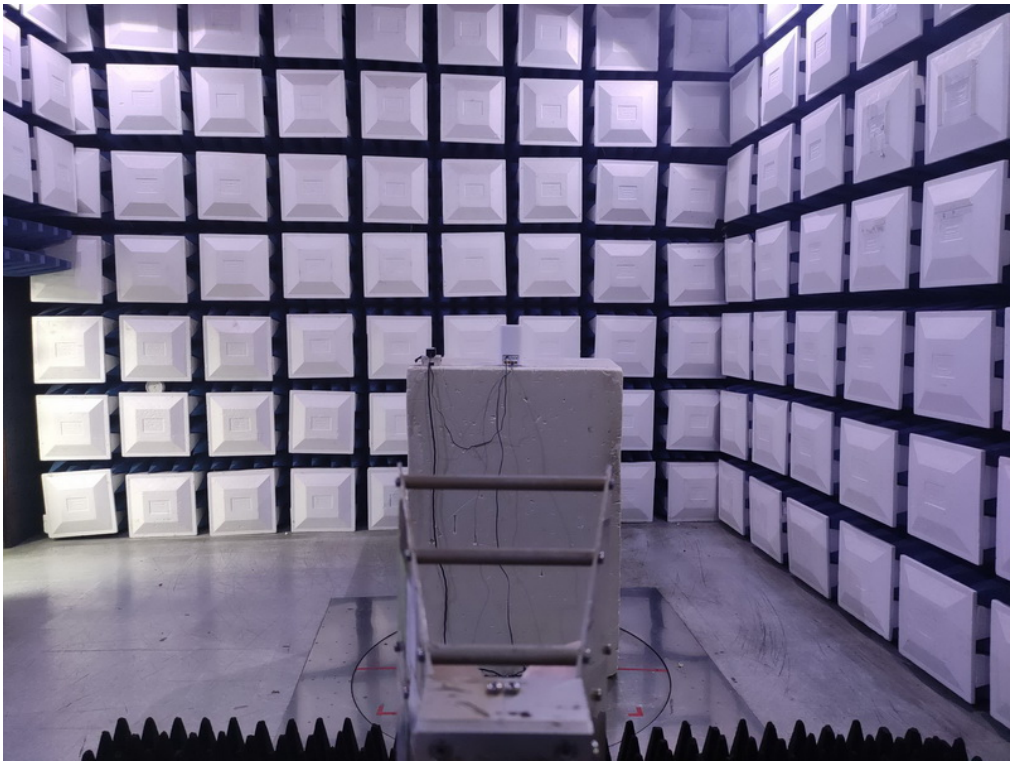

APPENDIX A - OUTPUT POWER

SA_n77 (SISO)

System	Band	Channel	TestItem	Measured Value	EIRP
NR	n77	630334	2.1046 RF power output:n77_10MHz_30kHz_630334;1;DFT-s-OFDM PI/2 BPSK_Inner_1RB_Left;PC3	21.14	22.03
NR	n77	630334	2.1046 RF power output:n77_10MHz_30kHz_630334;2;DFT-s-OFDM PI/2 BPSK_Inner_1RB_Right;PC3	21.22	22.11
NR	n77	630334	2.1046 RF power output:n77_10MHz_30kHz_630334;3;DFT-s-OFDM PI/2 BPSK_Inner_Full;PC3	21.43	22.32
NR	n77	630334	2.1046 RF power output:n77_10MHz_30kHz_630334;4;DFT-s-OFDM PI/2 BPSK_Edge_1RB_Left;PC3	21.1	21.99
NR	n77	630334	2.1046 RF power output:n77_10MHz_30kHz_630334;5;DFT-s-OFDM PI/2 BPSK_Edge_1RB_Right;PC3	21.18	22.07
NR	n77	630334	2.1046 RF power output:n77_10MHz_30kHz_630334;6;DFT-s-OFDM PI/2 BPSK_Outer_Full;PC3	21.33	22.22
NR	n77	630334	2.1046 RF power output:n77_10MHz_30kHz_630334;7;DFT-s-OFDM QPSK_Inner_1RB_Left;PC3	21.13	22.02
NR	n77	630334	2.1046 RF power output:n77_10MHz_30kHz_630334;8;DFT-s-OFDM QPSK_Inner_1RB_Right;PC3	21.23	22.12
NR	n77	630334	2.1046 RF power output:n77_10MHz_30kHz_630334;9;DFT-s-OFDM QPSK_Inner_Full;PC3	21.4	22.29
NR	n77	630334	2.1046 RF power output:n77_10MHz_30kHz_630334;10;DFT-s-OFDM QPSK_Edge_1RB_Left;PC3	21.07	21.96
NR	n77	630334	2.1046 RF power output:n77_10MHz_30kHz_630334;11;DFT-s-OFDM QPSK_Edge_1RB_Right;PC3	21.22	22.11
NR	n77	630334	2.1046 RF power output:n77_10MHz_30kHz_630334;12;DFT-s-OFDM QPSK_Outer_Full;PC3	21.31	22.2
NR	n77	630334	2.1046 RF power output:n77_10MHz_30kHz_630334;13;DFT-s-OFDM 16QAM_Inner_1RB_Left;PC3	21.19	22.08
NR	n77	630334	2.1046 RF power output:n77_10MHz_30kHz_630334;14;DFT-s-OFDM 16QAM_Inner_1RB_Right;PC3	21.31	22.2
NR	n77	630334	2.1046 RF power output:n77_10MHz_30kHz_630334;15;DFT-s-OFDM 16QAM_Inner_Full;PC3	21.32	22.21
NR	n77	630334	2.1046 RF power output:n77_10MHz_30kHz_630334;16;DFT-s-OFDM 16QAM_Edge_1RB_Left;PC3	21.17	22.06
NR	n77	630334	2.1046 RF power output:n77_10MHz_30kHz_630334;17;DFT-s-OFDM 16QAM_Edge_1RB_Right;PC3	21.11	22
NR	n77	630334	2.1046 RF power output:n77_10MHz_30kHz_630334;18;DFT-s-OFDM 16QAM_Outer_Full;PC3	21.31	22.2
NR	n77	630334	2.1046 RF power output:n77_10MHz_30kHz_630334;19;DFT-s-OFDM 64QAM_Inner_1RB_Left;PC3	21.03	21.92
NR	n77	630334	2.1046 RF power output:n77_10MHz_30kHz_630334;20;DFT-s-OFDM 64QAM_Inner_1RB_Right;PC3	21.12	22.01
NR	n77	630334	2.1046 RF power output:n77_10MHz_30kHz_630334;21;DFT-s-OFDM 64QAM_Inner_Full;PC3	21.38	22.27
NR	n77	630334	2.1046 RF power output:n77_10MHz_30kHz_630334;22;DFT-s-OFDM 64QAM_Edge_1RB_Left;PC3	20.91	21.8
NR	n77	630334	2.1046 RF power output:n77_10MHz_30kHz_630334;23;DFT-s-OFDM 64QAM_Edge_1RB_Right;PC3	20.73	21.62
NR	n77	630334	2.1046 RF power output:n77_10MHz_30kHz_630334;24;DFT-s-OFDM 64QAM_Outer_Full;PC3	21.02	21.91
NR	n77	630334	2.1046 RF power output:n77_10MHz_30kHz_630334;25;DFT-s-OFDM 256QAM_Inner_1RB_Left;PC3	20.69	21.58
NR	n77	630334	2.1046 RF power output:n77_10MHz_30kHz_630334;26;DFT-s-OFDM 256QAM_Inner_1RB_Right;PC3	20.86	21.75
NR	n77	630334	2.1046 RF power output:n77_10MHz_30kHz_630334;27;DFT-s-OFDM 256QAM_Inner_Full;PC3	20.89	21.78
NR	n77	630334	2.1046 RF power output:n77_10MHz_30kHz_630334;28;DFT-s-OFDM 256QAM_Edge_1RB_Left;PC3	20.6	21.49
NR	n77	630334	2.1046 RF power output:n77_10MHz_30kHz_630334;29;DFT-s-OFDM 256QAM_Edge_1RB_Right;PC3	20.71	21.6
NR	n77	630334	2.1046 RF power output:n77_10MHz_30kHz_630334;30;DFT-s-OFDM 256QAM_Outer_Full;PC3	19.8	20.69
NR	n77	630334	2.1046 RF power output:n77_10MHz_30kHz_630334;31;CP-OFDM QPSK_Inner_1RB_Left;PC3	21.06	21.95
NR	n77	630334	2.1046 RF power output:n77_10MHz_30kHz_630334;32;CP-OFDM QPSK_Inner_1RB_Right;PC3	21.1	21.99
NR	n77	630334	2.1046 RF power output:n77_10MHz_30kHz_630334;33;CP-OFDM QPSK_Inner_Full;PC3	21.32	22.21
NR	n77	630334	2.1046 RF power output:n77_10MHz_30kHz_630334;34;CP-OFDM QPSK_Edge_1RB_Left;PC3	20.96	21.85
NR	n77	630334	2.1046 RF power output:n77_10MHz_30kHz_630334;35;CP-OFDM QPSK_Edge_1RB_Right;PC3	21.07	21.96
NR	n77	630334	2.1046 RF power output:n77_10MHz_30kHz_630334;36;CP-OFDM QPSK_Outer_Full;PC3	21.29	22.18
NR	n77	630334	2.1046 RF power output:n77_10MHz_30kHz_630334;37;CP-OFDM 16QAM_Inner_1RB_Left;PC3	21.11	22
NR	n77	630334	2.1046 RF power output:n77_10MHz_30kHz_630334;38;CP-OFDM 16QAM_Inner_1RB_Right;PC3	21.32	22.21
NR	n77	630334	2.1046 RF power output:n77_10MHz_30kHz_630334;39;CP-OFDM 16QAM_Inner_Full;PC3	21.38	22.27
NR	n77	630334	2.1046 RF power output:n77_10MHz_30kHz_630334;40;CP-OFDM 16QAM_Edge_1RB_Left;PC3	21.33	22.22
NR	n77	630334	2.1046 RF power output:n77_10MHz_30kHz_630334;41;CP-OFDM 16QAM_Edge_1RB_Right;PC3	21.46	22.35
NR	n77	630334	2.1046 RF power output:n77_10MHz_30kHz_630334;42;CP-OFDM 16QAM_Outer_Full;PC3	21.35	22.24
NR	n77	630334	2.1046 RF power output:n77_10MHz_30kHz_630334;43;CP-OFDM 64QAM_Inner_1RB_Left;PC3	20.69	21.58
NR	n77	630334	2.1046 RF power output:n77_10MHz_30kHz_630334;44;CP-OFDM 64QAM_Inner_1RB_Right;PC3	21.19	22.08
NR	n77	630334	2.1046 RF power output:n77_10MHz_30kHz_630334;45;CP-OFDM 64QAM_Inner_Full;PC3	21.43	22.32
NR	n77	630334	2.1046 RF power output:n77_10MHz_30kHz_630334;46;CP-OFDM 64QAM_Edge_1RB_Left;PC3	20.18	21.07
NR	n77	630334	2.1046 RF power output:n77_10MHz_30kHz_630334;47;CP-OFDM 64QAM_Edge_1RB_Right;PC3	20.73	21.62
NR	n77	630334	2.1046 RF power output:n77_10MHz_30kHz_630334;48;CP-OFDM 64QAM_Outer_Full;PC3	19.77	20.66
NR	n77	630334	2.1046 RF power output:n77_10MHz_30kHz_630334;49;CP-OFDM 256QAM_Inner_1RB_Left;PC3	18.92	19.81
NR	n77	630334	2.1046 RF power output:n77_10MHz_30kHz_630334;50;CP-OFDM 256QAM_Inner_1RB_Right;PC3	18.89	19.78
NR	n77	630334	2.1046 RF power output:n77_10MHz_30kHz_630334;51;CP-OFDM 256QAM_Inner_Full;PC3	18.86	19.75
NR	n77	630334	2.1046 RF power output:n77_10MHz_30kHz_630334;52;CP-OFDM 256QAM_Edge_1RB_Left;PC3	18.69	19.58
NR	n77	630334	2.1046 RF power output:n77_10MHz_30kHz_630334;53;CP-OFDM 256QAM_Edge_1RB_Right;PC3	18.86	19.75
NR	n77	630334	2.1046 RF power output:n77_10MHz_30kHz_630334;54;CP-OFDM 256QAM_Outer_Full;PC3	17.82	18.71
NR	n77	633334	2.1046 RF power output:n77_10MHz_30kHz_633334;1;DFT-s-OFDM PI/2 BPSK_Inner_1RB_Left;PC3	21.29	22.18
NR	n77	633334	2.1046 RF power output:n77_10MHz_30kHz_633334;2;DFT-s-OFDM PI/2 BPSK_Inner_1RB_Right;PC3	21.32	22.21
NR	n77	633334	2.1046 RF power output:n77_10MHz_30kHz_633334;3;DFT-s-OFDM PI/2 BPSK_Inner_Full;PC3	21.56	22.45
NR	n77	633334	2.1046 RF power output:n77_10MHz_30kHz_633334;4;DFT-s-OFDM PI/2 BPSK_Edge_1RB_Left;PC3	21.21	22.1
NR	n77	633334	2.1046 RF power output:n77_10MHz_30kHz_633334;5;DFT-s-OFDM PI/2 BPSK_Edge_1RB_Right;PC3	21.25	22.14
NR	n77	633334	2.1046 RF power output:n77_10MHz_30kHz_633334;6;DFT-s-OFDM PI/2 BPSK_Outer_Full;PC3	21.44	22.33
NR	n77	633334	2.1046 RF power output:n77_10MHz_30kHz_633334;7;DFT-s-OFDM QPSK_Inner_1RB_Left;PC3	21.27	22.16
NR	n77	633334	2.1046 RF power output:n77_10MHz_30kHz_633334;8;DFT-s-OFDM QPSK_Inner_1RB_Right;PC3	21.34	22.23
NR	n77	633334	2.1046 RF power output:n77_10MHz_30kHz_633334;9;DFT-s-OFDM QPSK_Inner_Full;PC3	21.55	22.44
NR	n77	633334	2.1046 RF power output:n77_10MHz_30kHz_633334;10;DFT-s-OFDM QPSK_Edge_1RB_Left;PC3	21.22	22.11
NR	n77	633334	2.1046 RF power output:n77_10MHz_30kHz_633334;11;DFT-s-OFDM QPSK_Edge_1RB_Right;PC3	21.28	22.17
NR	n77	633334	2.1046 RF power output:n77_10MHz_30kHz_633334;12;DFT-s-OFDM QPSK_Outer_Full;PC3	21.45	22.34
NR	n77	633334	2.1046 RF power output:n77_10MHz_30kHz_633334;13;DFT-s-OFDM 16QAM_Inner_1RB_Left;PC3	21.19	22.08
NR	n77	633334	2.1046 RF power output:n77_10MHz_30kHz_633334;14;DFT-s-OFDM 16QAM_Inner_1RB_Right;PC3	21.24	22.13
NR	n77	633334	2.1046 RF power output:n77_10MHz_30kHz_633334;15;DFT-s-OFDM 16QAM_Inner_Full;PC3	21.57	22.46
NR	n77	633334	2.1046 RF power output:n77_10MHz_30kHz_633334;16;DFT-s-OFDM 16QAM_Edge_1RB_Left;PC3	21.32	22.21
NR	n77	633334	2.1046 RF power output:n77_10MHz_30kHz_633334;17;DFT-s-OFDM 16QAM_Edge_1RB_Right;PC3	21.38	22.27
NR	n77	633334	2.1046 RF power output:n77_10MHz_30kHz_633334;18;DFT-s-OFDM 16QAM_Outer_Full;PC3	21.5	22.39
NR	n77	633334	2.1046 RF power output:n77_10MHz_30kHz_633334;19;DFT-s-OFDM 64QAM_Inner_1RB_Left;PC3	21.21	22.1
NR	n77	633334	2.1046 RF power output:n77_10MHz_30kHz_633334;20;DFT-s-OFDM 64QAM_Inner_1RB_Right;PC3	21.31	22.2
NR	n77	633334	2.1046 RF power output:n77_10MHz_30kHz_633334;21;DFT-s-OFDM 64QAM_Inner_Full;PC3	21.55	22.44
NR	n77	633334	2.1046 RF power output:n77_10MHz_30kHz_633334;22;DFT-s-OFDM 64QAM_Edge_1RB_Left;PC3	20.79	21.68
NR	n77	633334	2.1046 RF power output:n77_10MHz_30kHz_633334;23;DFT-s-OFDM 64QAM_Edge_1RB_Right;PC3	21.15	22.04
NR	n77	633334	2.1046 RF power output:n77_10MHz_30kHz_633334;24;DFT-s-OFDM 64QAM_Outer_Full;PC3	21.12	22.01
NR	n77	633334	2.1046 RF power output:n77_10MHz_30kHz_633334;25;DFT-s-OFDM 256QAM_Inner_1RB_Left;PC3	20.97	21.86
NR	n77	633334	2.1046 RF power output:n77_10MHz_30kHz_633334;26;DFT-s-OFDM 256QAM_Inner_1RB_Right;PC3	20.94	21.83
NR	n77	633334	2.1046 RF power output:n77_10MHz_30kHz_633334;27;DFT-s-OFDM 256QAM_Inner_Full;PC3	21.11	22

System	Band	Channel	TestItem	Measured Value	EIRP
NR	n77	633334	2.1046 RF power output:n77_10MHz_30kHz_633334;28;DFT-s-OFDM 256QAM_Edge_1RB_Left;PC3	20.72	21.61
NR	n77	633334	2.1046 RF power output:n77_10MHz_30kHz_633334;29;DFT-s-OFDM 256QAM_Edge_1RB_Right;PC3	20.77	21.66
NR	n77	633334	2.1046 RF power output:n77_10MHz_30kHz_633334;30;DFT-s-OFDM 256QAM_Outer_Full;PC3	19.91	20.8
NR	n77	633334	2.1046 RF power output:n77_10MHz_30kHz_633334;31;CP-OFDM QPSK_Inner_1RB_Left;PC3	21.5	22.39
NR	n77	633334	2.1046 RF power output:n77_10MHz_30kHz_633334;32;CP-OFDM QPSK_Inner_1RB_Right;PC3	21.48	22.37
NR	n77	633334	2.1046 RF power output:n77_10MHz_30kHz_633334;33;CP-OFDM QPSK_Inner_Full;PC3	21.73	22.62
NR	n77	633334	2.1046 RF power output:n77_10MHz_30kHz_633334;34;CP-OFDM QPSK_Edge_1RB_Left;PC3	21.33	22.22
NR	n77	633334	2.1046 RF power output:n77_10MHz_30kHz_633334;35;CP-OFDM QPSK_Edge_1RB_Right;PC3	21.42	22.31
NR	n77	633334	2.1046 RF power output:n77_10MHz_30kHz_633334;36;CP-OFDM QPSK_Outer_Full;PC3	21.62	22.51
NR	n77	633334	2.1046 RF power output:n77_10MHz_30kHz_633334;37;CP-OFDM 16QAM_Inner_1RB_Left;PC3	21.48	22.37
NR	n77	633334	2.1046 RF power output:n77_10MHz_30kHz_633334;38;CP-OFDM 16QAM_Inner_1RB_Right;PC3	21.5	22.39
NR	n77	633334	2.1046 RF power output:n77_10MHz_30kHz_633334;39;CP-OFDM 16QAM_Inner_Full;PC3	21.7	22.59
NR	n77	633334	2.1046 RF power output:n77_10MHz_30kHz_633334;40;CP-OFDM 16QAM_Edge_1RB_Left;PC3	21.47	22.36
NR	n77	633334	2.1046 RF power output:n77_10MHz_30kHz_633334;41;CP-OFDM 16QAM_Edge_1RB_Right;PC3	21.55	22.44
NR	n77	633334	2.1046 RF power output:n77_10MHz_30kHz_633334;42;CP-OFDM 16QAM_Outer_Full;PC3	21.64	22.53
NR	n77	633334	2.1046 RF power output:n77_10MHz_30kHz_633334;43;CP-OFDM 64QAM_Inner_1RB_Left;PC3	20.95	21.84
NR	n77	633334	2.1046 RF power output:n77_10MHz_30kHz_633334;44;CP-OFDM 64QAM_Inner_1RB_Right;PC3	21.42	22.31
NR	n77	633334	2.1046 RF power output:n77_10MHz_30kHz_633334;45;CP-OFDM 64QAM_Inner_Full;PC3	21.74	22.63
NR	n77	633334	2.1046 RF power output:n77_10MHz_30kHz_633334;46;CP-OFDM 64QAM_Edge_1RB_Left;PC3	20.96	21.85
NR	n77	633334	2.1046 RF power output:n77_10MHz_30kHz_633334;47;CP-OFDM 64QAM_Edge_1RB_Right;PC3	21.1	21.99
NR	n77	633334	2.1046 RF power output:n77_10MHz_30kHz_633334;48;CP-OFDM 64QAM_Outer_Full;PC3	20.21	21.1
NR	n77	633334	2.1046 RF power output:n77_10MHz_30kHz_633334;49;CP-OFDM 256QAM_Inner_1RB_Left;PC3	19.09	19.98
NR	n77	633334	2.1046 RF power output:n77_10MHz_30kHz_633334;50;CP-OFDM 256QAM_Inner_1RB_Right;PC3	19.17	20.06
NR	n77	633334	2.1046 RF power output:n77_10MHz_30kHz_633334;51;CP-OFDM 256QAM_Inner_Full;PC3	19.17	20.06
NR	n77	633334	2.1046 RF power output:n77_10MHz_30kHz_633334;52;CP-OFDM 256QAM_Edge_1RB_Left;PC3	18.81	19.7
NR	n77	633334	2.1046 RF power output:n77_10MHz_30kHz_633334;53;CP-OFDM 256QAM_Edge_1RB_Right;PC3	18.94	19.83
NR	n77	633334	2.1046 RF power output:n77_10MHz_30kHz_633334;54;CP-OFDM 256QAM_Outer_Full;PC3	18	18.89
NR	n77	636332	2.1046 RF power output:n77_10MHz_30kHz_636332;1;DFT-s-OFDM PI/2 BPSK_Inner_1RB_Left;PC3	21.19	22.08
NR	n77	636332	2.1046 RF power output:n77_10MHz_30kHz_636332;2;DFT-s-OFDM PI/2 BPSK_Inner_1RB_Right;PC3	21.05	21.94
NR	n77	636332	2.1046 RF power output:n77_10MHz_30kHz_636332;3;DFT-s-OFDM PI/2 BPSK_Inner_Full;PC3	21.42	22.31
NR	n77	636332	2.1046 RF power output:n77_10MHz_30kHz_636332;4;DFT-s-OFDM PI/2 BPSK_Edge_1RB_Left;PC3	21.12	22.01
NR	n77	636332	2.1046 RF power output:n77_10MHz_30kHz_636332;5;DFT-s-OFDM PI/2 BPSK_Edge_1RB_Right;PC3	21.01	21.9
NR	n77	636332	2.1046 RF power output:n77_10MHz_30kHz_636332;6;DFT-s-OFDM PI/2 BPSK_Outer_Full;PC3	21.3	22.19
NR	n77	636332	2.1046 RF power output:n77_10MHz_30kHz_636332;7;DFT-s-OFDM QPSK_Inner_1RB_Left;PC3	21.19	22.08
NR	n77	636332	2.1046 RF power output:n77_10MHz_30kHz_636332;8;DFT-s-OFDM QPSK_Inner_1RB_Right;PC3	21.08	21.97
NR	n77	636332	2.1046 RF power output:n77_10MHz_30kHz_636332;9;DFT-s-OFDM QPSK_Inner_Full;PC3	21.43	22.32
NR	n77	636332	2.1046 RF power output:n77_10MHz_30kHz_636332;10;DFT-s-OFDM QPSK_Edge_1RB_Left;PC3	21.16	22.05
NR	n77	636332	2.1046 RF power output:n77_10MHz_30kHz_636332;11;DFT-s-OFDM QPSK_Edge_1RB_Right;PC3	21.05	21.94
NR	n77	636332	2.1046 RF power output:n77_10MHz_30kHz_636332;12;DFT-s-OFDM QPSK_Outer_Full;PC3	21.33	22.22
NR	n77	636332	2.1046 RF power output:n77_10MHz_30kHz_636332;13;DFT-s-OFDM 16QAM_Inner_1RB_Left;PC3	21.19	22.08
NR	n77	636332	2.1046 RF power output:n77_10MHz_30kHz_636332;14;DFT-s-OFDM 16QAM_Inner_1RB_Right;PC3	21.09	21.98
NR	n77	636332	2.1046 RF power output:n77_10MHz_30kHz_636332;15;DFT-s-OFDM 16QAM_Inner_Full;PC3	21.42	22.31
NR	n77	636332	2.1046 RF power output:n77_10MHz_30kHz_636332;16;DFT-s-OFDM 16QAM_Edge_1RB_Left;PC3	21.1	21.99
NR	n77	636332	2.1046 RF power output:n77_10MHz_30kHz_636332;17;DFT-s-OFDM 16QAM_Edge_1RB_Right;PC3	21.09	21.98
NR	n77	636332	2.1046 RF power output:n77_10MHz_30kHz_636332;18;DFT-s-OFDM 16QAM_Outer_Full;PC3	21.37	22.26
NR	n77	636332	2.1046 RF power output:n77_10MHz_30kHz_636332;19;DFT-s-OFDM 64QAM_Inner_1RB_Left;PC3	21.08	21.97
NR	n77	636332	2.1046 RF power output:n77_10MHz_30kHz_636332;20;DFT-s-OFDM 64QAM_Inner_1RB_Right;PC3	20.96	21.85
NR	n77	636332	2.1046 RF power output:n77_10MHz_30kHz_636332;21;DFT-s-OFDM 64QAM_Inner_Full;PC3	21.46	22.35
NR	n77	636332	2.1046 RF power output:n77_10MHz_30kHz_636332;22;DFT-s-OFDM 64QAM_Edge_1RB_Left;PC3	21.05	21.94
NR	n77	636332	2.1046 RF power output:n77_10MHz_30kHz_636332;23;DFT-s-OFDM 64QAM_Edge_1RB_Right;PC3	21.02	21.91
NR	n77	636332	2.1046 RF power output:n77_10MHz_30kHz_636332;24;DFT-s-OFDM 64QAM_Outer_Full;PC3	21.07	21.96
NR	n77	636332	2.1046 RF power output:n77_10MHz_30kHz_636332;25;DFT-s-OFDM 256QAM_Inner_1RB_Left;PC3	21.12	22.01
NR	n77	636332	2.1046 RF power output:n77_10MHz_30kHz_636332;26;DFT-s-OFDM 256QAM_Inner_1RB_Right;PC3	21	21.89
NR	n77	636332	2.1046 RF power output:n77_10MHz_30kHz_636332;27;DFT-s-OFDM 256QAM_Inner_Full;PC3	21.14	22.03
NR	n77	636332	2.1046 RF power output:n77_10MHz_30kHz_636332;28;DFT-s-OFDM 256QAM_Edge_1RB_Left;PC3	20.72	21.61
NR	n77	636332	2.1046 RF power output:n77_10MHz_30kHz_636332;29;DFT-s-OFDM 256QAM_Edge_1RB_Right;PC3	20.6	21.49
NR	n77	636332	2.1046 RF power output:n77_10MHz_30kHz_636332;30;DFT-s-OFDM 256QAM_Outer_Full;PC3	19.81	20.7
NR	n77	636332	2.1046 RF power output:n77_10MHz_30kHz_636332;31;CP-OFDM QPSK_Inner_1RB_Left;PC3	21.4	22.29
NR	n77	636332	2.1046 RF power output:n77_10MHz_30kHz_636332;32;CP-OFDM QPSK_Inner_1RB_Right;PC3	21.26	22.15
NR	n77	636332	2.1046 RF power output:n77_10MHz_30kHz_636332;33;CP-OFDM QPSK_Inner_Full;PC3	21.69	22.58
NR	n77	636332	2.1046 RF power output:n77_10MHz_30kHz_636332;34;CP-OFDM QPSK_Edge_1RB_Left;PC3	21.36	22.25
NR	n77	636332	2.1046 RF power output:n77_10MHz_30kHz_636332;35;CP-OFDM QPSK_Edge_1RB_Right;PC3	21.12	22.01
NR	n77	636332	2.1046 RF power output:n77_10MHz_30kHz_636332;36;CP-OFDM QPSK_Outer_Full;PC3	21.55	22.44
NR	n77	636332	2.1046 RF power output:n77_10MHz_30kHz_636332;37;CP-OFDM 16QAM_Inner_1RB_Left;PC3	21.53	22.42
NR	n77	636332	2.1046 RF power output:n77_10MHz_30kHz_636332;38;CP-OFDM 16QAM_Inner_1RB_Right;PC3	21.4	22.29
NR	n77	636332	2.1046 RF power output:n77_10MHz_30kHz_636332;39;CP-OFDM 16QAM_Inner_Full;PC3	21.64	22.53
NR	n77	636332	2.1046 RF power output:n77_10MHz_30kHz_636332;40;CP-OFDM 16QAM_Edge_1RB_Left;PC3	21.61	22.5
NR	n77	636332	2.1046 RF power output:n77_10MHz_30kHz_636332;41;CP-OFDM 16QAM_Edge_1RB_Right;PC3	21.21	22.1
NR	n77	636332	2.1046 RF power output:n77_10MHz_30kHz_636332;42;CP-OFDM 16QAM_Outer_Full;PC3	21.56	22.45
NR	n77	636332	2.1046 RF power output:n77_10MHz_30kHz_636332;43;CP-OFDM 64QAM_Inner_1RB_Left;PC3	20.95	21.84
NR	n77	636332	2.1046 RF power output:n77_10MHz_30kHz_636332;44;CP-OFDM 64QAM_Inner_1RB_Right;PC3	20.81	21.7
NR	n77	636332	2.1046 RF power output:n77_10MHz_30kHz_636332;45;CP-OFDM 64QAM_Inner_Full;PC3	21.68	22.57
NR	n77	636332	2.1046 RF power output:n77_10MHz_30kHz_636332;46;CP-OFDM 64QAM_Edge_1RB_Left;PC3	20.52	21.41
NR	n77	636332	2.1046 RF power output:n77_10MHz_30kHz_636332;47;CP-OFDM 64QAM_Edge_1RB_Right;PC3	20.4	21.29
NR	n77	636332	2.1046 RF power output:n77_10MHz_30kHz_636332;48;CP-OFDM 64QAM_Outer_Full;PC3	20.05	20.94
NR	n77	636332	2.1046 RF power output:n77_10MHz_30kHz_636332;49;CP-OFDM 256QAM_Inner_1RB_Left;PC3	19	19.89
NR	n77	636332	2.1046 RF power output:n77_10MHz_30kHz_636332;50;CP-OFDM 256QAM_Inner_1RB_Right;PC3	18.91	19.8
NR	n77	636332	2.1046 RF power output:n77_10MHz_30kHz_636332;51;CP-OFDM 256QAM_Inner_Full;PC3	19.16	20.05
NR	n77	636332	2.1046 RF power output:n77_10MHz_30kHz_636332;52;CP-OFDM 256QAM_Edge_1RB_Left;PC3	18.94	19.83
NR	n77	636332	2.1046 RF power output:n77_10MHz_30kHz_636332;53;CP-OFDM 256QAM_Edge_1RB_Right;PC3	18.82	19.71
NR	n77	636332	2.1046 RF power output:n77_10MHz_30kHz_636332;54;CP-OFDM 256QAM_Outer_Full;PC3	17.96	18.85

System	Band	Channel	TestItem	Measured Value	EIRP
NR	n77	630500	2.1046 RF power output:n77_15MHz_30kHz_630500;1;DFT-s-OFDM PI/2 BPSK_Inner_1RB_Left;PC3	21.13	22.02
NR	n77	630500	2.1046 RF power output:n77_15MHz_30kHz_630500;2;DFT-s-OFDM PI/2 BPSK_Inner_1RB_Right;PC3	21.33	22.22
NR	n77	630500	2.1046 RF power output:n77_15MHz_30kHz_630500;3;DFT-s-OFDM PI/2 BPSK_Inner_Full;PC3	21.62	22.51
NR	n77	630500	2.1046 RF power output:n77_15MHz_30kHz_630500;4;DFT-s-OFDM PI/2 BPSK_Edge_1RB_Left;PC3	20.92	21.81
NR	n77	630500	2.1046 RF power output:n77_15MHz_30kHz_630500;5;DFT-s-OFDM PI/2 BPSK_Edge_1RB_Right;PC3	21.17	22.06
NR	n77	630500	2.1046 RF power output:n77_15MHz_30kHz_630500;6;DFT-s-OFDM PI/2 BPSK_Outer_Full;PC3	21.47	22.36
NR	n77	630500	2.1046 RF power output:n77_15MHz_30kHz_630500;7;DFT-s-OFDM QPSK_Inner_1RB_Left;PC3	21.11	22
NR	n77	630500	2.1046 RF power output:n77_15MHz_30kHz_630500;8;DFT-s-OFDM QPSK_Inner_1RB_Right;PC3	21.33	22.22
NR	n77	630500	2.1046 RF power output:n77_15MHz_30kHz_630500;9;DFT-s-OFDM QPSK_Inner_Full;PC3	21.6	22.49
NR	n77	630500	2.1046 RF power output:n77_15MHz_30kHz_630500;10;DFT-s-OFDM QPSK_Edge_1RB_Left;PC3	20.92	21.81
NR	n77	630500	2.1046 RF power output:n77_15MHz_30kHz_630500;11;DFT-s-OFDM QPSK_Edge_1RB_Right;PC3	21.16	22.05
NR	n77	630500	2.1046 RF power output:n77_15MHz_30kHz_630500;12;DFT-s-OFDM QPSK_Outer_Full;PC3	21.45	22.34
NR	n77	630500	2.1046 RF power output:n77_15MHz_30kHz_630500;13;DFT-s-OFDM 16QAM_Inner_1RB_Left;PC3	21.07	21.96
NR	n77	630500	2.1046 RF power output:n77_15MHz_30kHz_630500;14;DFT-s-OFDM 16QAM_Inner_1RB_Right;PC3	21.26	22.15
NR	n77	630500	2.1046 RF power output:n77_15MHz_30kHz_630500;15;DFT-s-OFDM 16QAM_Inner_Full;PC3	21.62	22.51
NR	n77	630500	2.1046 RF power output:n77_15MHz_30kHz_630500;16;DFT-s-OFDM 16QAM_Edge_1RB_Left;PC3	20.9	21.79
NR	n77	630500	2.1046 RF power output:n77_15MHz_30kHz_630500;17;DFT-s-OFDM 16QAM_Edge_1RB_Right;PC3	21.09	21.98
NR	n77	630500	2.1046 RF power output:n77_15MHz_30kHz_630500;18;DFT-s-OFDM 16QAM_Outer_Full;PC3	21.51	22.4
NR	n77	630500	2.1046 RF power output:n77_15MHz_30kHz_630500;19;DFT-s-OFDM 64QAM_Inner_1RB_Left;PC3	20.65	21.54
NR	n77	630500	2.1046 RF power output:n77_15MHz_30kHz_630500;20;DFT-s-OFDM 64QAM_Inner_1RB_Right;PC3	20.89	21.78
NR	n77	630500	2.1046 RF power output:n77_15MHz_30kHz_630500;21;DFT-s-OFDM 64QAM_Inner_Full;PC3	21.55	22.44
NR	n77	630500	2.1046 RF power output:n77_15MHz_30kHz_630500;22;DFT-s-OFDM 64QAM_Edge_1RB_Left;PC3	20.91	21.8
NR	n77	630500	2.1046 RF power output:n77_15MHz_30kHz_630500;23;DFT-s-OFDM 64QAM_Edge_1RB_Right;PC3	21.17	22.06
NR	n77	630500	2.1046 RF power output:n77_15MHz_30kHz_630500;24;DFT-s-OFDM 64QAM_Outer_Full;PC3	21.21	22.1
NR	n77	630500	2.1046 RF power output:n77_15MHz_30kHz_630500;25;DFT-s-OFDM 256QAM_Inner_1RB_Left;PC3	20.9	21.79
NR	n77	630500	2.1046 RF power output:n77_15MHz_30kHz_630500;26;DFT-s-OFDM 256QAM_Inner_1RB_Right;PC3	21.13	22.02
NR	n77	630500	2.1046 RF power output:n77_15MHz_30kHz_630500;27;DFT-s-OFDM 256QAM_Inner_Full;PC3	21.22	22.11
NR	n77	630500	2.1046 RF power output:n77_15MHz_30kHz_630500;28;DFT-s-OFDM 256QAM_Edge_1RB_Left;PC3	20.52	21.41
NR	n77	630500	2.1046 RF power output:n77_15MHz_30kHz_630500;29;DFT-s-OFDM 256QAM_Edge_1RB_Right;PC3	20.76	21.65
NR	n77	630500	2.1046 RF power output:n77_15MHz_30kHz_630500;30;DFT-s-OFDM 256QAM_Outer_Full;PC3	20.01	20.9
NR	n77	630500	2.1046 RF power output:n77_15MHz_30kHz_630500;31;CP-OFDM QPSK_Inner_1RB_Left;PC3	21.31	22.2
NR	n77	630500	2.1046 RF power output:n77_15MHz_30kHz_630500;32;CP-OFDM QPSK_Inner_1RB_Right;PC3	21.58	22.47
NR	n77	630500	2.1046 RF power output:n77_15MHz_30kHz_630500;33;CP-OFDM QPSK_Inner_Full;PC3	21.75	22.64
NR	n77	630500	2.1046 RF power output:n77_15MHz_30kHz_630500;34;CP-OFDM QPSK_Edge_1RB_Left;PC3	21.08	21.97
NR	n77	630500	2.1046 RF power output:n77_15MHz_30kHz_630500;35;CP-OFDM QPSK_Edge_1RB_Right;PC3	21.35	22.24
NR	n77	630500	2.1046 RF power output:n77_15MHz_30kHz_630500;36;CP-OFDM QPSK_Outer_Full;PC3	21.44	22.33
NR	n77	630500	2.1046 RF power output:n77_15MHz_30kHz_630500;37;CP-OFDM 16QAM_Inner_1RB_Left;PC3	21.48	22.37
NR	n77	630500	2.1046 RF power output:n77_15MHz_30kHz_630500;38;CP-OFDM 16QAM_Inner_1RB_Right;PC3	21.57	22.46
NR	n77	630500	2.1046 RF power output:n77_15MHz_30kHz_630500;39;CP-OFDM 16QAM_Inner_Full;PC3	21.76	22.65
NR	n77	630500	2.1046 RF power output:n77_15MHz_30kHz_630500;40;CP-OFDM 16QAM_Edge_1RB_Left;PC3	21.37	22.26
NR	n77	630500	2.1046 RF power output:n77_15MHz_30kHz_630500;41;CP-OFDM 16QAM_Edge_1RB_Right;PC3	21.58	22.47
NR	n77	630500	2.1046 RF power output:n77_15MHz_30kHz_630500;42;CP-OFDM 16QAM_Outer_Full;PC3	21.66	22.55
NR	n77	630500	2.1046 RF power output:n77_15MHz_30kHz_630500;43;CP-OFDM 64QAM_Inner_1RB_Left;PC3	20.86	21.75
NR	n77	630500	2.1046 RF power output:n77_15MHz_30kHz_630500;44;CP-OFDM 64QAM_Inner_1RB_Right;PC3	21.07	21.96
NR	n77	630500	2.1046 RF power output:n77_15MHz_30kHz_630500;45;CP-OFDM 64QAM_Inner_Full;PC3	21.76	22.65
NR	n77	630500	2.1046 RF power output:n77_15MHz_30kHz_630500;46;CP-OFDM 64QAM_Edge_1RB_Left;PC3	20.73	21.62
NR	n77	630500	2.1046 RF power output:n77_15MHz_30kHz_630500;47;CP-OFDM 64QAM_Edge_1RB_Right;PC3	20.95	21.84
NR	n77	630500	2.1046 RF power output:n77_15MHz_30kHz_630500;48;CP-OFDM 64QAM_Outer_Full;PC3	20.15	21.04
NR	n77	630500	2.1046 RF power output:n77_15MHz_30kHz_630500;49;CP-OFDM 256QAM_Inner_1RB_Left;PC3	18.88	19.77
NR	n77	630500	2.1046 RF power output:n77_15MHz_30kHz_630500;50;CP-OFDM 256QAM_Inner_1RB_Right;PC3	19.06	19.95
NR	n77	630500	2.1046 RF power output:n77_15MHz_30kHz_630500;51;CP-OFDM 256QAM_Inner_Full;PC3	19.18	20.07
NR	n77	630500	2.1046 RF power output:n77_15MHz_30kHz_630500;52;CP-OFDM 256QAM_Edge_1RB_Left;PC3	18.64	19.53
NR	n77	630500	2.1046 RF power output:n77_15MHz_30kHz_630500;53;CP-OFDM 256QAM_Edge_1RB_Right;PC3	18.81	19.7
NR	n77	630500	2.1046 RF power output:n77_15MHz_30kHz_630500;54;CP-OFDM 256QAM_Outer_Full;PC3	18.05	18.94
NR	n77	633334	2.1046 RF power output:n77_15MHz_30kHz_633334;1;DFT-s-OFDM PI/2 BPSK_Inner_1RB_Left;PC3	21.3	22.19
NR	n77	633334	2.1046 RF power output:n77_15MHz_30kHz_633334;2;DFT-s-OFDM PI/2 BPSK_Inner_1RB_Right;PC3	21.37	22.26
NR	n77	633334	2.1046 RF power output:n77_15MHz_30kHz_633334;3;DFT-s-OFDM PI/2 BPSK_Inner_Full;PC3	21.77	22.66
NR	n77	633334	2.1046 RF power output:n77_15MHz_30kHz_633334;4;DFT-s-OFDM PI/2 BPSK_Edge_1RB_Left;PC3	21.09	21.98
NR	n77	633334	2.1046 RF power output:n77_15MHz_30kHz_633334;5;DFT-s-OFDM PI/2 BPSK_Edge_1RB_Right;PC3	21.19	22.08
NR	n77	633334	2.1046 RF power output:n77_15MHz_30kHz_633334;6;DFT-s-OFDM PI/2 BPSK_Outer_Full;PC3	21.61	22.5
NR	n77	633334	2.1046 RF power output:n77_15MHz_30kHz_633334;7;DFT-s-OFDM QPSK_Inner_1RB_Left;PC3	21.29	22.18
NR	n77	633334	2.1046 RF power output:n77_15MHz_30kHz_633334;8;DFT-s-OFDM QPSK_Inner_1RB_Right;PC3	21.4	22.29
NR	n77	633334	2.1046 RF power output:n77_15MHz_30kHz_633334;9;DFT-s-OFDM QPSK_Inner_Full;PC3	21.89	22.78
NR	n77	633334	2.1046 RF power output:n77_15MHz_30kHz_633334;10;DFT-s-OFDM QPSK_Edge_1RB_Left;PC3	21.13	22.02
NR	n77	633334	2.1046 RF power output:n77_15MHz_30kHz_633334;11;DFT-s-OFDM QPSK_Edge_1RB_Right;PC3	21.24	22.13
NR	n77	633334	2.1046 RF power output:n77_15MHz_30kHz_633334;12;DFT-s-OFDM QPSK_Outer_Full;PC3	21.62	22.51
NR	n77	633334	2.1046 RF power output:n77_15MHz_30kHz_633334;13;DFT-s-OFDM 16QAM_Inner_1RB_Left;PC3	21.23	22.12
NR	n77	633334	2.1046 RF power output:n77_15MHz_30kHz_633334;14;DFT-s-OFDM 16QAM_Inner_1RB_Right;PC3	21.54	22.43
NR	n77	633334	2.1046 RF power output:n77_15MHz_30kHz_633334;15;DFT-s-OFDM 16QAM_Inner_Full;PC3	21.82	22.71
NR	n77	633334	2.1046 RF power output:n77_15MHz_30kHz_633334;16;DFT-s-OFDM 16QAM_Edge_1RB_Left;PC3	21.24	22.13
NR	n77	633334	2.1046 RF power output:n77_15MHz_30kHz_633334;17;DFT-s-OFDM 16QAM_Edge_1RB_Right;PC3	21.33	22.22
NR	n77	633334	2.1046 RF power output:n77_15MHz_30kHz_633334;18;DFT-s-OFDM 16QAM_Outer_Full;PC3	21.69	22.58
NR	n77	633334	2.1046 RF power output:n77_15MHz_30kHz_633334;19;DFT-s-OFDM 64QAM_Inner_1RB_Left;PC3	20.92	21.81
NR	n77	633334	2.1046 RF power output:n77_15MHz_30kHz_633334;20;DFT-s-OFDM 64QAM_Inner_1RB_Right;PC3	21.05	21.94
NR	n77	633334	2.1046 RF power output:n77_15MHz_30kHz_633334;21;DFT-s-OFDM 64QAM_Inner_Full;PC3	21.83	22.72
NR	n77	633334	2.1046 RF power output:n77_15MHz_30kHz_633334;22;DFT-s-OFDM 64QAM_Edge_1RB_Left;PC3	20.69	21.58
NR	n77	633334	2.1046 RF power output:n77_15MHz_30kHz_633334;23;DFT-s-OFDM 64QAM_Edge_1RB_Right;PC3	20.78	21.67
NR	n77	633334	2.1046 RF power output:n77_15MHz_30kHz_633334;24;DFT-s-OFDM 64QAM_Outer_Full;PC3	21.35	22.24
NR	n77	633334	2.1046 RF power output:n77_15MHz_30kHz_633334;25;DFT-s-OFDM 256QAM_Inner_1RB_Left;PC3	21.1	21.99
NR	n77	633334	2.1046 RF power output:n77_15MHz_30kHz_633334;26;DFT-s-OFDM 256QAM_Inner_1RB_Right;PC3	21.18	22.07
NR	n77	633334	2.1046 RF power output:n77_15MHz_30kHz_633334;27;DFT-s-OFDM 256QAM_Inner_Full;PC3	21.53	22.42

System	Band	Channel	TestItem	Measured Value	EIRP
NR	n77	633334	2.1046 RF power output:n77_15MHz_30kHz_633334;28;DFT-s-OFDM 256QAM_Edge_1RB_Left;PC3	20.92	21.81
NR	n77	633334	2.1046 RF power output:n77_15MHz_30kHz_633334;29;DFT-s-OFDM 256QAM_Edge_1RB_Right;PC3	21.02	21.91
NR	n77	633334	2.1046 RF power output:n77_15MHz_30kHz_633334;30;DFT-s-OFDM 256QAM_Outer_Full;PC3	20.21	21.1
NR	n77	633334	2.1046 RF power output:n77_15MHz_30kHz_633334;31;CP-OFDM QPSK_Inner_1RB_Left;PC3	21.59	22.48
NR	n77	633334	2.1046 RF power output:n77_15MHz_30kHz_633334;32;CP-OFDM QPSK_Inner_1RB_Right;PC3	21.68	22.57
NR	n77	633334	2.1046 RF power output:n77_15MHz_30kHz_633334;33;CP-OFDM QPSK_Inner_Full;PC3	22.07	22.96
NR	n77	633334	2.1046 RF power output:n77_15MHz_30kHz_633334;34;CP-OFDM QPSK_Edge_1RB_Left;PC3	21.41	22.3
NR	n77	633334	2.1046 RF power output:n77_15MHz_30kHz_633334;35;CP-OFDM QPSK_Edge_1RB_Right;PC3	21.48	22.37
NR	n77	633334	2.1046 RF power output:n77_15MHz_30kHz_633334;36;CP-OFDM QPSK_Outer_Full;PC3	21.92	22.81
NR	n77	633334	2.1046 RF power output:n77_15MHz_30kHz_633334;37;CP-OFDM 16QAM_Inner_1RB_Left;PC3	21.67	22.56
NR	n77	633334	2.1046 RF power output:n77_15MHz_30kHz_633334;38;CP-OFDM 16QAM_Inner_1RB_Right;PC3	21.75	22.64
NR	n77	633334	2.1046 RF power output:n77_15MHz_30kHz_633334;39;CP-OFDM 16QAM_Inner_Full;PC3	22.08	22.97
NR	n77	633334	2.1046 RF power output:n77_15MHz_30kHz_633334;40;CP-OFDM 16QAM_Edge_1RB_Left;PC3	21.64	22.53
NR	n77	633334	2.1046 RF power output:n77_15MHz_30kHz_633334;41;CP-OFDM 16QAM_Edge_1RB_Right;PC3	21.7	22.59
NR	n77	633334	2.1046 RF power output:n77_15MHz_30kHz_633334;42;CP-OFDM 16QAM_Outer_Full;PC3	21.9	22.79
NR	n77	633334	2.1046 RF power output:n77_15MHz_30kHz_633334;43;CP-OFDM 64QAM_Inner_1RB_Left;PC3	21.47	22.36
NR	n77	633334	2.1046 RF power output:n77_15MHz_30kHz_633334;44;CP-OFDM 64QAM_Inner_1RB_Right;PC3	21.54	22.43
NR	n77	633334	2.1046 RF power output:n77_15MHz_30kHz_633334;45;CP-OFDM 64QAM_Inner_Full;PC3	22.09	22.98
NR	n77	633334	2.1046 RF power output:n77_15MHz_30kHz_633334;46;CP-OFDM 64QAM_Edge_1RB_Left;PC3	20.92	21.81
NR	n77	633334	2.1046 RF power output:n77_15MHz_30kHz_633334;47;CP-OFDM 64QAM_Edge_1RB_Right;PC3	20.96	21.85
NR	n77	633334	2.1046 RF power output:n77_15MHz_30kHz_633334;48;CP-OFDM 64QAM_Outer_Full;PC3	20.43	21.32
NR	n77	633334	2.1046 RF power output:n77_15MHz_30kHz_633334;49;CP-OFDM 256QAM_Inner_1RB_Left;PC3	19.16	20.05
NR	n77	633334	2.1046 RF power output:n77_15MHz_30kHz_633334;50;CP-OFDM 256QAM_Inner_1RB_Right;PC3	19.22	20.11
NR	n77	633334	2.1046 RF power output:n77_15MHz_30kHz_633334;51;CP-OFDM 256QAM_Inner_Full;PC3	19.43	20.32
NR	n77	633334	2.1046 RF power output:n77_15MHz_30kHz_633334;52;CP-OFDM 256QAM_Edge_1RB_Left;PC3	18.76	19.65
NR	n77	633334	2.1046 RF power output:n77_15MHz_30kHz_633334;53;CP-OFDM 256QAM_Edge_1RB_Right;PC3	18.89	19.78
NR	n77	633334	2.1046 RF power output:n77_15MHz_30kHz_633334;54;CP-OFDM 256QAM_Outer_Full;PC3	18.18	19.07
NR	n77	636166	2.1046 RF power output:n77_15MHz_30kHz_636166;1;DFT-s-OFDM PI/2 BPSK_Inner_1RB_Left;PC3	21.25	22.14
NR	n77	636166	2.1046 RF power output:n77_15MHz_30kHz_636166;2;DFT-s-OFDM PI/2 BPSK_Inner_1RB_Right;PC3	21.19	22.08
NR	n77	636166	2.1046 RF power output:n77_15MHz_30kHz_636166;3;DFT-s-OFDM PI/2 BPSK_Inner_Full;PC3	21.69	22.58
NR	n77	636166	2.1046 RF power output:n77_15MHz_30kHz_636166;4;DFT-s-OFDM PI/2 BPSK_Edge_1RB_Left;PC3	21.1	21.99
NR	n77	636166	2.1046 RF power output:n77_15MHz_30kHz_636166;5;DFT-s-OFDM PI/2 BPSK_Edge_1RB_Right;PC3	21	21.89
NR	n77	636166	2.1046 RF power output:n77_15MHz_30kHz_636166;6;DFT-s-OFDM PI/2 BPSK_Outer_Full;PC3	21.55	22.44
NR	n77	636166	2.1046 RF power output:n77_15MHz_30kHz_636166;7;DFT-s-OFDM QPSK_Inner_1RB_Left;PC3	21.29	22.18
NR	n77	636166	2.1046 RF power output:n77_15MHz_30kHz_636166;8;DFT-s-OFDM QPSK_Inner_1RB_Right;PC3	21.19	22.08
NR	n77	636166	2.1046 RF power output:n77_15MHz_30kHz_636166;9;DFT-s-OFDM QPSK_Inner_Full;PC3	21.75	22.64
NR	n77	636166	2.1046 RF power output:n77_15MHz_30kHz_636166;10;DFT-s-OFDM QPSK_Edge_1RB_Left;PC3	21.1	21.99
NR	n77	636166	2.1046 RF power output:n77_15MHz_30kHz_636166;11;DFT-s-OFDM QPSK_Edge_1RB_Right;PC3	21.02	21.91
NR	n77	636166	2.1046 RF power output:n77_15MHz_30kHz_636166;12;DFT-s-OFDM QPSK_Outer_Full;PC3	21.56	22.45
NR	n77	636166	2.1046 RF power output:n77_15MHz_30kHz_636166;13;DFT-s-OFDM 16QAM_Inner_1RB_Left;PC3	21.23	22.12
NR	n77	636166	2.1046 RF power output:n77_15MHz_30kHz_636166;14;DFT-s-OFDM 16QAM_Inner_1RB_Right;PC3	21.15	22.04
NR	n77	636166	2.1046 RF power output:n77_15MHz_30kHz_636166;15;DFT-s-OFDM 16QAM_Inner_Full;PC3	21.8	22.69
NR	n77	636166	2.1046 RF power output:n77_15MHz_30kHz_636166;16;DFT-s-OFDM 16QAM_Edge_1RB_Left;PC3	21.11	22
NR	n77	636166	2.1046 RF power output:n77_15MHz_30kHz_636166;17;DFT-s-OFDM 16QAM_Edge_1RB_Right;PC3	21.14	22.03
NR	n77	636166	2.1046 RF power output:n77_15MHz_30kHz_636166;18;DFT-s-OFDM 16QAM_Outer_Full;PC3	21.65	22.54
NR	n77	636166	2.1046 RF power output:n77_15MHz_30kHz_636166;19;DFT-s-OFDM 64QAM_Inner_1RB_Left;PC3	21.17	22.06
NR	n77	636166	2.1046 RF power output:n77_15MHz_30kHz_636166;20;DFT-s-OFDM 64QAM_Inner_1RB_Right;PC3	21.24	22.13
NR	n77	636166	2.1046 RF power output:n77_15MHz_30kHz_636166;21;DFT-s-OFDM 64QAM_Inner_Full;PC3	21.77	22.66
NR	n77	636166	2.1046 RF power output:n77_15MHz_30kHz_636166;22;DFT-s-OFDM 64QAM_Edge_1RB_Left;PC3	20.7	21.59
NR	n77	636166	2.1046 RF power output:n77_15MHz_30kHz_636166;23;DFT-s-OFDM 64QAM_Edge_1RB_Right;PC3	21	21.89
NR	n77	636166	2.1046 RF power output:n77_15MHz_30kHz_636166;24;DFT-s-OFDM 64QAM_Outer_Full;PC3	21.32	22.21
NR	n77	636166	2.1046 RF power output:n77_15MHz_30kHz_636166;25;DFT-s-OFDM 256QAM_Inner_1RB_Left;PC3	21.07	21.96
NR	n77	636166	2.1046 RF power output:n77_15MHz_30kHz_636166;26;DFT-s-OFDM 256QAM_Inner_1RB_Right;PC3	20.89	21.78
NR	n77	636166	2.1046 RF power output:n77_15MHz_30kHz_636166;27;DFT-s-OFDM 256QAM_Inner_Full;PC3	21.31	22.2
NR	n77	636166	2.1046 RF power output:n77_15MHz_30kHz_636166;28;DFT-s-OFDM 256QAM_Edge_1RB_Left;PC3	20.7	21.59
NR	n77	636166	2.1046 RF power output:n77_15MHz_30kHz_636166;29;DFT-s-OFDM 256QAM_Edge_1RB_Right;PC3	20.65	21.54
NR	n77	636166	2.1046 RF power output:n77_15MHz_30kHz_636166;30;DFT-s-OFDM 256QAM_Outer_Full;PC3	20.06	20.95
NR	n77	636166	2.1046 RF power output:n77_15MHz_30kHz_636166;31;CP-OFDM QPSK_Inner_1RB_Left;PC3	21.49	22.38
NR	n77	636166	2.1046 RF power output:n77_15MHz_30kHz_636166;32;CP-OFDM QPSK_Inner_1RB_Right;PC3	21.39	22.28
NR	n77	636166	2.1046 RF power output:n77_15MHz_30kHz_636166;33;CP-OFDM QPSK_Inner_Full;PC3	21.96	22.85
NR	n77	636166	2.1046 RF power output:n77_15MHz_30kHz_636166;34;CP-OFDM QPSK_Edge_1RB_Left;PC3	21.34	22.23
NR	n77	636166	2.1046 RF power output:n77_15MHz_30kHz_636166;35;CP-OFDM QPSK_Edge_1RB_Right;PC3	21.21	22.1
NR	n77	636166	2.1046 RF power output:n77_15MHz_30kHz_636166;36;CP-OFDM QPSK_Outer_Full;PC3	21.76	22.65
NR	n77	636166	2.1046 RF power output:n77_15MHz_30kHz_636166;37;CP-OFDM 16QAM_Inner_1RB_Left;PC3	21.61	22.5
NR	n77	636166	2.1046 RF power output:n77_15MHz_30kHz_636166;38;CP-OFDM 16QAM_Inner_1RB_Right;PC3	21.5	22.39
NR	n77	636166	2.1046 RF power output:n77_15MHz_30kHz_636166;39;CP-OFDM 16QAM_Inner_Full;PC3	21.9	22.79
NR	n77	636166	2.1046 RF power output:n77_15MHz_30kHz_636166;40;CP-OFDM 16QAM_Edge_1RB_Left;PC3	21.42	22.31
NR	n77	636166	2.1046 RF power output:n77_15MHz_30kHz_636166;41;CP-OFDM 16QAM_Edge_1RB_Right;PC3	21.3	22.19
NR	n77	636166	2.1046 RF power output:n77_15MHz_30kHz_636166;42;CP-OFDM 16QAM_Outer_Full;PC3	21.8	22.69
NR	n77	636166	2.1046 RF power output:n77_15MHz_30kHz_636166;43;CP-OFDM 64QAM_Inner_1RB_Left;PC3	21.45	22.34
NR	n77	636166	2.1046 RF power output:n77_15MHz_30kHz_636166;44;CP-OFDM 64QAM_Inner_1RB_Right;PC3	21.32	22.21
NR	n77	636166	2.1046 RF power output:n77_15MHz_30kHz_636166;45;CP-OFDM 64QAM_Inner_Full;PC3	21.97	22.86
NR	n77	636166	2.1046 RF power output:n77_15MHz_30kHz_636166;46;CP-OFDM 64QAM_Edge_1RB_Left;PC3	20.87	21.76
NR	n77	636166	2.1046 RF power output:n77_15MHz_30kHz_636166;47;CP-OFDM 64QAM_Edge_1RB_Right;PC3	20.76	21.65
NR	n77	636166	2.1046 RF power output:n77_15MHz_30kHz_636166;48;CP-OFDM 64QAM_Outer_Full;PC3	20.3	21.19
NR	n77	636166	2.1046 RF power output:n77_15MHz_30kHz_636166;49;CP-OFDM 256QAM_Inner_1RB_Left;PC3	19.13	20.02
NR	n77	636166	2.1046 RF power output:n77_15MHz_30kHz_636166;50;CP-OFDM 256QAM_Inner_1RB_Right;PC3	19.03	19.92
NR	n77	636166	2.1046 RF power output:n77_15MHz_30kHz_636166;51;CP-OFDM 256QAM_Inner_Full;PC3	19.42	20.31
NR	n77	636166	2.1046 RF power output:n77_15MHz_30kHz_636166;52;CP-OFDM 256QAM_Edge_1RB_Left;PC3	18.83	19.72
NR	n77	636166	2.1046 RF power output:n77_15MHz_30kHz_636166;53;CP-OFDM 256QAM_Edge_1RB_Right;PC3	18.62	19.51
NR	n77	636166	2.1046 RF power output:n77_15MHz_30kHz_636166;54;CP-OFDM 256QAM_Outer_Full;PC3	18.21	19.1

System	Band	Channel	TestItem	Measured Value	EIRP
NR	n77	630668	2.1046 RF power output:n77_20MHz_30kHz_630668;1;DFT-s-OFDM PI/2 BPSK_Inner_1RB_Left;PC3	21.12	22.01
NR	n77	630668	2.1046 RF power output:n77_20MHz_30kHz_630668;2;DFT-s-OFDM PI/2 BPSK_Inner_1RB_Right;PC3	21.57	22.46
NR	n77	630668	2.1046 RF power output:n77_20MHz_30kHz_630668;3;DFT-s-OFDM PI/2 BPSK_Inner_Full;PC3	21.94	22.83
NR	n77	630668	2.1046 RF power output:n77_20MHz_30kHz_630668;4;DFT-s-OFDM PI/2 BPSK_Edge_1RB_Left;PC3	20.98	21.87
NR	n77	630668	2.1046 RF power output:n77_20MHz_30kHz_630668;5;DFT-s-OFDM PI/2 BPSK_Edge_1RB_Right;PC3	21.3	22.19
NR	n77	630668	2.1046 RF power output:n77_20MHz_30kHz_630668;6;DFT-s-OFDM PI/2 BPSK_Outer_Full;PC3	21.83	22.72
NR	n77	630668	2.1046 RF power output:n77_20MHz_30kHz_630668;7;DFT-s-OFDM QPSK_Inner_1RB_Left;PC3	21.24	22.13
NR	n77	630668	2.1046 RF power output:n77_20MHz_30kHz_630668;8;DFT-s-OFDM QPSK_Inner_1RB_Right;PC3	21.6	22.49
NR	n77	630668	2.1046 RF power output:n77_20MHz_30kHz_630668;9;DFT-s-OFDM QPSK_Inner_Full;PC3	21.92	22.81
NR	n77	630668	2.1046 RF power output:n77_20MHz_30kHz_630668;10;DFT-s-OFDM QPSK_Edge_1RB_Left;PC3	20.99	21.88
NR	n77	630668	2.1046 RF power output:n77_20MHz_30kHz_630668;11;DFT-s-OFDM QPSK_Edge_1RB_Right;PC3	21.33	22.22
NR	n77	630668	2.1046 RF power output:n77_20MHz_30kHz_630668;12;DFT-s-OFDM QPSK_Outer_Full;PC3	21.82	22.71
NR	n77	630668	2.1046 RF power output:n77_20MHz_30kHz_630668;13;DFT-s-OFDM 16QAM_Inner_1RB_Left;PC3	21.32	22.21
NR	n77	630668	2.1046 RF power output:n77_20MHz_30kHz_630668;14;DFT-s-OFDM 16QAM_Inner_1RB_Right;PC3	21.67	22.56
NR	n77	630668	2.1046 RF power output:n77_20MHz_30kHz_630668;15;DFT-s-OFDM 16QAM_Inner_Full;PC3	21.94	22.83
NR	n77	630668	2.1046 RF power output:n77_20MHz_30kHz_630668;16;DFT-s-OFDM 16QAM_Edge_1RB_Left;PC3	21.06	21.95
NR	n77	630668	2.1046 RF power output:n77_20MHz_30kHz_630668;17;DFT-s-OFDM 16QAM_Edge_1RB_Right;PC3	21.41	22.3
NR	n77	630668	2.1046 RF power output:n77_20MHz_30kHz_630668;18;DFT-s-OFDM 16QAM_Outer_Full;PC3	21.79	22.68
NR	n77	630668	2.1046 RF power output:n77_20MHz_30kHz_630668;19;DFT-s-OFDM 64QAM_Inner_1RB_Left;PC3	20.75	21.64
NR	n77	630668	2.1046 RF power output:n77_20MHz_30kHz_630668;20;DFT-s-OFDM 64QAM_Inner_1RB_Right;PC3	21.1	21.99
NR	n77	630668	2.1046 RF power output:n77_20MHz_30kHz_630668;21;DFT-s-OFDM 64QAM_Inner_Full;PC3	21.9	22.79
NR	n77	630668	2.1046 RF power output:n77_20MHz_30kHz_630668;22;DFT-s-OFDM 64QAM_Edge_1RB_Left;PC3	20.52	21.41
NR	n77	630668	2.1046 RF power output:n77_20MHz_30kHz_630668;23;DFT-s-OFDM 64QAM_Edge_1RB_Right;PC3	21.31	22.2
NR	n77	630668	2.1046 RF power output:n77_20MHz_30kHz_630668;24;DFT-s-OFDM 64QAM_Outer_Full;PC3	21.55	22.44
NR	n77	630668	2.1046 RF power output:n77_20MHz_30kHz_630668;25;DFT-s-OFDM 256QAM_Inner_1RB_Left;PC3	21.02	21.91
NR	n77	630668	2.1046 RF power output:n77_20MHz_30kHz_630668;26;DFT-s-OFDM 256QAM_Inner_1RB_Right;PC3	21.36	22.25
NR	n77	630668	2.1046 RF power output:n77_20MHz_30kHz_630668;27;DFT-s-OFDM 256QAM_Inner_Full;PC3	21.5	22.39
NR	n77	630668	2.1046 RF power output:n77_20MHz_30kHz_630668;28;DFT-s-OFDM 256QAM_Edge_1RB_Left;PC3	20.57	21.46
NR	n77	630668	2.1046 RF power output:n77_20MHz_30kHz_630668;29;DFT-s-OFDM 256QAM_Edge_1RB_Right;PC3	20.94	21.83
NR	n77	630668	2.1046 RF power output:n77_20MHz_30kHz_630668;30;DFT-s-OFDM 256QAM_Outer_Full;PC3	20.35	21.24
NR	n77	630668	2.1046 RF power output:n77_20MHz_30kHz_630668;31;CP-OFDM QPSK_Inner_1RB_Left;PC3	21.2	22.09
NR	n77	630668	2.1046 RF power output:n77_20MHz_30kHz_630668;32;CP-OFDM QPSK_Inner_1RB_Right;PC3	21.62	22.51
NR	n77	630668	2.1046 RF power output:n77_20MHz_30kHz_630668;33;CP-OFDM QPSK_Inner_Full;PC3	22	22.89
NR	n77	630668	2.1046 RF power output:n77_20MHz_30kHz_630668;34;CP-OFDM QPSK_Edge_1RB_Left;PC3	21.09	21.98
NR	n77	630668	2.1046 RF power output:n77_20MHz_30kHz_630668;35;CP-OFDM QPSK_Edge_1RB_Right;PC3	21.29	22.18
NR	n77	630668	2.1046 RF power output:n77_20MHz_30kHz_630668;36;CP-OFDM QPSK_Outer_Full;PC3	21.93	22.82
NR	n77	630668	2.1046 RF power output:n77_20MHz_30kHz_630668;37;CP-OFDM 16QAM_Inner_1RB_Left;PC3	21.45	22.34
NR	n77	630668	2.1046 RF power output:n77_20MHz_30kHz_630668;38;CP-OFDM 16QAM_Inner_1RB_Right;PC3	21.98	22.87
NR	n77	630668	2.1046 RF power output:n77_20MHz_30kHz_630668;39;CP-OFDM 16QAM_Inner_Full;PC3	22.02	22.91
NR	n77	630668	2.1046 RF power output:n77_20MHz_30kHz_630668;40;CP-OFDM 16QAM_Edge_1RB_Left;PC3	21.14	22.03
NR	n77	630668	2.1046 RF power output:n77_20MHz_30kHz_630668;41;CP-OFDM 16QAM_Edge_1RB_Right;PC3	21.56	22.45
NR	n77	630668	2.1046 RF power output:n77_20MHz_30kHz_630668;42;CP-OFDM 16QAM_Outer_Full;PC3	21.89	22.78
NR	n77	630668	2.1046 RF power output:n77_20MHz_30kHz_630668;43;CP-OFDM 64QAM_Inner_1RB_Left;PC3	21.24	22.13
NR	n77	630668	2.1046 RF power output:n77_20MHz_30kHz_630668;44;CP-OFDM 64QAM_Inner_1RB_Right;PC3	21.63	22.52
NR	n77	630668	2.1046 RF power output:n77_20MHz_30kHz_630668;45;CP-OFDM 64QAM_Inner_Full;PC3	21.95	22.84
NR	n77	630668	2.1046 RF power output:n77_20MHz_30kHz_630668;46;CP-OFDM 64QAM_Edge_1RB_Left;PC3	20.6	21.49
NR	n77	630668	2.1046 RF power output:n77_20MHz_30kHz_630668;47;CP-OFDM 64QAM_Edge_1RB_Right;PC3	20.99	21.88
NR	n77	630668	2.1046 RF power output:n77_20MHz_30kHz_630668;48;CP-OFDM 64QAM_Outer_Full;PC3	20.5	21.39
NR	n77	630668	2.1046 RF power output:n77_20MHz_30kHz_630668;49;CP-OFDM 256QAM_Inner_1RB_Left;PC3	18.91	19.8
NR	n77	630668	2.1046 RF power output:n77_20MHz_30kHz_630668;50;CP-OFDM 256QAM_Inner_1RB_Right;PC3	19.25	20.14
NR	n77	630668	2.1046 RF power output:n77_20MHz_30kHz_630668;51;CP-OFDM 256QAM_Inner_Full;PC3	19.38	20.27
NR	n77	630668	2.1046 RF power output:n77_20MHz_30kHz_630668;52;CP-OFDM 256QAM_Edge_1RB_Left;PC3	18.5	19.39
NR	n77	630668	2.1046 RF power output:n77_20MHz_30kHz_630668;53;CP-OFDM 256QAM_Edge_1RB_Right;PC3	18.86	19.75
NR	n77	630668	2.1046 RF power output:n77_20MHz_30kHz_630668;54;CP-OFDM 256QAM_Outer_Full;PC3	18.3	19.19
NR	n77	633334	2.1046 RF power output:n77_20MHz_30kHz_633334;1;DFT-s-OFDM PI/2 BPSK_Inner_1RB_Left;PC3	21.34	22.23
NR	n77	633334	2.1046 RF power output:n77_20MHz_30kHz_633334;2;DFT-s-OFDM PI/2 BPSK_Inner_1RB_Right;PC3	21.48	22.37
NR	n77	633334	2.1046 RF power output:n77_20MHz_30kHz_633334;3;DFT-s-OFDM PI/2 BPSK_Inner_Full;PC3	21.99	22.88
NR	n77	633334	2.1046 RF power output:n77_20MHz_30kHz_633334;4;DFT-s-OFDM PI/2 BPSK_Edge_1RB_Left;PC3	21.05	21.94
NR	n77	633334	2.1046 RF power output:n77_20MHz_30kHz_633334;5;DFT-s-OFDM PI/2 BPSK_Edge_1RB_Right;PC3	21.2	22.09
NR	n77	633334	2.1046 RF power output:n77_20MHz_30kHz_633334;6;DFT-s-OFDM PI/2 BPSK_Outer_Full;PC3	21.86	22.75
NR	n77	633334	2.1046 RF power output:n77_20MHz_30kHz_633334;7;DFT-s-OFDM QPSK_Inner_1RB_Left;PC3	21.34	22.23
NR	n77	633334	2.1046 RF power output:n77_20MHz_30kHz_633334;8;DFT-s-OFDM QPSK_Inner_1RB_Right;PC3	21.48	22.37
NR	n77	633334	2.1046 RF power output:n77_20MHz_30kHz_633334;9;DFT-s-OFDM QPSK_Inner_Full;PC3	21.99	22.88
NR	n77	633334	2.1046 RF power output:n77_20MHz_30kHz_633334;10;DFT-s-OFDM QPSK_Edge_1RB_Left;PC3	21.1	21.99
NR	n77	633334	2.1046 RF power output:n77_20MHz_30kHz_633334;11;DFT-s-OFDM QPSK_Edge_1RB_Right;PC3	21.23	22.12
NR	n77	633334	2.1046 RF power output:n77_20MHz_30kHz_633334;12;DFT-s-OFDM QPSK_Outer_Full;PC3	21.86	22.75
NR	n77	633334	2.1046 RF power output:n77_20MHz_30kHz_633334;13;DFT-s-OFDM 16QAM_Inner_1RB_Left;PC3	21.28	22.17
NR	n77	633334	2.1046 RF power output:n77_20MHz_30kHz_633334;14;DFT-s-OFDM 16QAM_Inner_1RB_Right;PC3	21.45	22.34
NR	n77	633334	2.1046 RF power output:n77_20MHz_30kHz_633334;15;DFT-s-OFDM 16QAM_Inner_Full;PC3	22.03	22.92
NR	n77	633334	2.1046 RF power output:n77_20MHz_30kHz_633334;16;DFT-s-OFDM 16QAM_Edge_1RB_Left;PC3	21.18	22.07
NR	n77	633334	2.1046 RF power output:n77_20MHz_30kHz_633334;17;DFT-s-OFDM 16QAM_Edge_1RB_Right;PC3	21.31	22.2
NR	n77	633334	2.1046 RF power output:n77_20MHz_30kHz_633334;18;DFT-s-OFDM 16QAM_Outer_Full;PC3	21.91	22.8
NR	n77	633334	2.1046 RF power output:n77_20MHz_30kHz_633334;19;DFT-s-OFDM 64QAM_Inner_1RB_Left;PC3	21.35	22.24
NR	n77	633334	2.1046 RF power output:n77_20MHz_30kHz_633334;20;DFT-s-OFDM 64QAM_Inner_1RB_Right;PC3	21.49	22.38
NR	n77	633334	2.1046 RF power output:n77_20MHz_30kHz_633334;21;DFT-s-OFDM 64QAM_Inner_Full;PC3	21.98	22.87
NR	n77	633334	2.1046 RF power output:n77_20MHz_30kHz_633334;22;DFT-s-OFDM 64QAM_Edge_1RB_Left;PC3	20.94	21.83
NR	n77	633334	2.1046 RF power output:n77_20MHz_30kHz_633334;23;DFT-s-OFDM 64QAM_Edge_1RB_Right;PC3	21.16	22.05
NR	n77	633334	2.1046 RF power output:n77_20MHz_30kHz_633334;24;DFT-s-OFDM 64QAM_Outer_Full;PC3	21.67	22.56
NR	n77	633334	2.1046 RF power output:n77_20MHz_30kHz_633334;25;DFT-s-OFDM 256QAM_Inner_1RB_Left;PC3	21.26	22.15
NR	n77	633334	2.1046 RF power output:n77_20MHz_30kHz_633334;26;DFT-s-OFDM 256QAM_Inner_1RB_Right;PC3	21.36	22.25
NR	n77	633334	2.1046 RF power output:n77_20MHz_30kHz_633334;27;DFT-s-OFDM 256QAM_Inner_Full;PC3	21.68	22.57

System	Band	Channel	TestItem	Measured Value	EIRP
NR	n77	633334	2.1046 RF power output:n77_20MHz_30kHz_633334;28;DFT-s-OFDM 256QAM_Edge_1RB_Left;PC3	20.73	21.62
NR	n77	633334	2.1046 RF power output:n77_20MHz_30kHz_633334;29;DFT-s-OFDM 256QAM_Edge_1RB_Right;PC3	20.86	21.75
NR	n77	633334	2.1046 RF power output:n77_20MHz_30kHz_633334;30;DFT-s-OFDM 256QAM_Outer_Full;PC3	20.46	21.35
NR	n77	633334	2.1046 RF power output:n77_20MHz_30kHz_633334;31;CP-OFDM QPSK_Inner_1RB_Left;PC3	21.49	22.38
NR	n77	633334	2.1046 RF power output:n77_20MHz_30kHz_633334;32;CP-OFDM QPSK_Inner_1RB_Right;PC3	21.67	22.56
NR	n77	633334	2.1046 RF power output:n77_20MHz_30kHz_633334;33;CP-OFDM QPSK_Inner_Full;PC3	22.13	23.02
NR	n77	633334	2.1046 RF power output:n77_20MHz_30kHz_633334;34;CP-OFDM QPSK_Edge_1RB_Left;PC3	21.3	22.19
NR	n77	633334	2.1046 RF power output:n77_20MHz_30kHz_633334;35;CP-OFDM QPSK_Edge_1RB_Right;PC3	21.39	22.28
NR	n77	633334	2.1046 RF power output:n77_20MHz_30kHz_633334;36;CP-OFDM QPSK_Outer_Full;PC3	22	22.89
NR	n77	633334	2.1046 RF power output:n77_20MHz_30kHz_633334;37;CP-OFDM 16QAM_Inner_1RB_Left;PC3	21.61	22.5
NR	n77	633334	2.1046 RF power output:n77_20MHz_30kHz_633334;38;CP-OFDM 16QAM_Inner_1RB_Right;PC3	21.91	22.8
NR	n77	633334	2.1046 RF power output:n77_20MHz_30kHz_633334;39;CP-OFDM 16QAM_Inner_Full;PC3	22.18	23.07
NR	n77	633334	2.1046 RF power output:n77_20MHz_30kHz_633334;40;CP-OFDM 16QAM_Edge_1RB_Left;PC3	21.38	22.27
NR	n77	633334	2.1046 RF power output:n77_20MHz_30kHz_633334;41;CP-OFDM 16QAM_Edge_1RB_Right;PC3	21.52	22.41
NR	n77	633334	2.1046 RF power output:n77_20MHz_30kHz_633334;42;CP-OFDM 16QAM_Outer_Full;PC3	21.98	22.87
NR	n77	633334	2.1046 RF power output:n77_20MHz_30kHz_633334;43;CP-OFDM 64QAM_Inner_1RB_Left;PC3	21.51	22.4
NR	n77	633334	2.1046 RF power output:n77_20MHz_30kHz_633334;44;CP-OFDM 64QAM_Inner_1RB_Right;PC3	21.62	22.51
NR	n77	633334	2.1046 RF power output:n77_20MHz_30kHz_633334;45;CP-OFDM 64QAM_Inner_Full;PC3	22.16	23.05
NR	n77	633334	2.1046 RF power output:n77_20MHz_30kHz_633334;46;CP-OFDM 64QAM_Edge_1RB_Left;PC3	20.86	21.75
NR	n77	633334	2.1046 RF power output:n77_20MHz_30kHz_633334;47;CP-OFDM 64QAM_Edge_1RB_Right;PC3	20.94	21.83
NR	n77	633334	2.1046 RF power output:n77_20MHz_30kHz_633334;48;CP-OFDM 64QAM_Outer_Full;PC3	20.66	21.55
NR	n77	633334	2.1046 RF power output:n77_20MHz_30kHz_633334;49;CP-OFDM 256QAM_Inner_1RB_Left;PC3	19.17	20.06
NR	n77	633334	2.1046 RF power output:n77_20MHz_30kHz_633334;50;CP-OFDM 256QAM_Inner_1RB_Right;PC3	19.27	20.16
NR	n77	633334	2.1046 RF power output:n77_20MHz_30kHz_633334;51;CP-OFDM 256QAM_Inner_Full;PC3	19.56	20.45
NR	n77	633334	2.1046 RF power output:n77_20MHz_30kHz_633334;52;CP-OFDM 256QAM_Edge_1RB_Left;PC3	18.68	19.57
NR	n77	633334	2.1046 RF power output:n77_20MHz_30kHz_633334;53;CP-OFDM 256QAM_Edge_1RB_Right;PC3	18.88	19.77
NR	n77	633334	2.1046 RF power output:n77_20MHz_30kHz_633334;54;CP-OFDM 256QAM_Outer_Full;PC3	18.32	19.21
NR	n77	636000	2.1046 RF power output:n77_20MHz_30kHz_636000;1;DFT-s-OFDM PI/2 BPSK_Inner_1RB_Left;PC3	21.22	22.11
NR	n77	636000	2.1046 RF power output:n77_20MHz_30kHz_636000;2;DFT-s-OFDM PI/2 BPSK_Inner_1RB_Right;PC3	21.17	22.06
NR	n77	636000	2.1046 RF power output:n77_20MHz_30kHz_636000;3;DFT-s-OFDM PI/2 BPSK_Inner_Full;PC3	21.83	22.72
NR	n77	636000	2.1046 RF power output:n77_20MHz_30kHz_636000;4;DFT-s-OFDM PI/2 BPSK_Edge_1RB_Left;PC3	20.93	21.82
NR	n77	636000	2.1046 RF power output:n77_20MHz_30kHz_636000;5;DFT-s-OFDM PI/2 BPSK_Edge_1RB_Right;PC3	20.91	21.8
NR	n77	636000	2.1046 RF power output:n77_20MHz_30kHz_636000;6;DFT-s-OFDM PI/2 BPSK_Outer_Full;PC3	21.67	22.56
NR	n77	636000	2.1046 RF power output:n77_20MHz_30kHz_636000;7;DFT-s-OFDM QPSK_Inner_1RB_Left;PC3	21.2	22.09
NR	n77	636000	2.1046 RF power output:n77_20MHz_30kHz_636000;8;DFT-s-OFDM QPSK_Inner_1RB_Right;PC3	21.16	22.05
NR	n77	636000	2.1046 RF power output:n77_20MHz_30kHz_636000;9;DFT-s-OFDM QPSK_Inner_Full;PC3	21.84	22.73
NR	n77	636000	2.1046 RF power output:n77_20MHz_30kHz_636000;10;DFT-s-OFDM QPSK_Edge_1RB_Left;PC3	20.97	21.86
NR	n77	636000	2.1046 RF power output:n77_20MHz_30kHz_636000;11;DFT-s-OFDM QPSK_Edge_1RB_Right;PC3	20.92	21.81
NR	n77	636000	2.1046 RF power output:n77_20MHz_30kHz_636000;12;DFT-s-OFDM QPSK_Outer_Full;PC3	21.69	22.58
NR	n77	636000	2.1046 RF power output:n77_20MHz_30kHz_636000;13;DFT-s-OFDM 16QAM_Inner_1RB_Left;PC3	21.2	22.09
NR	n77	636000	2.1046 RF power output:n77_20MHz_30kHz_636000;14;DFT-s-OFDM 16QAM_Inner_1RB_Right;PC3	21.1	21.99
NR	n77	636000	2.1046 RF power output:n77_20MHz_30kHz_636000;15;DFT-s-OFDM 16QAM_Inner_Full;PC3	21.92	22.81
NR	n77	636000	2.1046 RF power output:n77_20MHz_30kHz_636000;16;DFT-s-OFDM 16QAM_Edge_1RB_Left;PC3	20.92	21.81
NR	n77	636000	2.1046 RF power output:n77_20MHz_30kHz_636000;17;DFT-s-OFDM 16QAM_Edge_1RB_Right;PC3	20.91	21.8
NR	n77	636000	2.1046 RF power output:n77_20MHz_30kHz_636000;18;DFT-s-OFDM 16QAM_Outer_Full;PC3	21.72	22.61
NR	n77	636000	2.1046 RF power output:n77_20MHz_30kHz_636000;19;DFT-s-OFDM 64QAM_Inner_1RB_Left;PC3	20.82	21.71
NR	n77	636000	2.1046 RF power output:n77_20MHz_30kHz_636000;20;DFT-s-OFDM 64QAM_Inner_1RB_Right;PC3	21.23	22.12
NR	n77	636000	2.1046 RF power output:n77_20MHz_30kHz_636000;21;DFT-s-OFDM 64QAM_Inner_Full;PC3	21.88	22.77
NR	n77	636000	2.1046 RF power output:n77_20MHz_30kHz_636000;22;DFT-s-OFDM 64QAM_Edge_1RB_Left;PC3	20.98	21.87
NR	n77	636000	2.1046 RF power output:n77_20MHz_30kHz_636000;23;DFT-s-OFDM 64QAM_Edge_1RB_Right;PC3	20.96	21.85
NR	n77	636000	2.1046 RF power output:n77_20MHz_30kHz_636000;24;DFT-s-OFDM 64QAM_Outer_Full;PC3	21.49	22.38
NR	n77	636000	2.1046 RF power output:n77_20MHz_30kHz_636000;25;DFT-s-OFDM 256QAM_Inner_1RB_Left;PC3	21.03	21.92
NR	n77	636000	2.1046 RF power output:n77_20MHz_30kHz_636000;26;DFT-s-OFDM 256QAM_Inner_1RB_Right;PC3	20.92	21.81
NR	n77	636000	2.1046 RF power output:n77_20MHz_30kHz_636000;27;DFT-s-OFDM 256QAM_Inner_Full;PC3	21.43	22.32
NR	n77	636000	2.1046 RF power output:n77_20MHz_30kHz_636000;28;DFT-s-OFDM 256QAM_Edge_1RB_Left;PC3	20.52	21.41
NR	n77	636000	2.1046 RF power output:n77_20MHz_30kHz_636000;29;DFT-s-OFDM 256QAM_Edge_1RB_Right;PC3	20.55	21.44
NR	n77	636000	2.1046 RF power output:n77_20MHz_30kHz_636000;30;DFT-s-OFDM 256QAM_Outer_Full;PC3	20.12	21.01
NR	n77	636000	2.1046 RF power output:n77_20MHz_30kHz_636000;31;CP-OFDM QPSK_Inner_1RB_Left;PC3	21.31	22.2
NR	n77	636000	2.1046 RF power output:n77_20MHz_30kHz_636000;32;CP-OFDM QPSK_Inner_1RB_Right;PC3	21.31	22.2
NR	n77	636000	2.1046 RF power output:n77_20MHz_30kHz_636000;33;CP-OFDM QPSK_Inner_Full;PC3	21.82	22.71
NR	n77	636000	2.1046 RF power output:n77_20MHz_30kHz_636000;34;CP-OFDM QPSK_Edge_1RB_Left;PC3	20.99	21.88
NR	n77	636000	2.1046 RF power output:n77_20MHz_30kHz_636000;35;CP-OFDM QPSK_Edge_1RB_Right;PC3	20.95	21.84
NR	n77	636000	2.1046 RF power output:n77_20MHz_30kHz_636000;36;CP-OFDM QPSK_Outer_Full;PC3	21.68	22.57
NR	n77	636000	2.1046 RF power output:n77_20MHz_30kHz_636000;37;CP-OFDM 16QAM_Inner_1RB_Left;PC3	21.49	22.38
NR	n77	636000	2.1046 RF power output:n77_20MHz_30kHz_636000;38;CP-OFDM 16QAM_Inner_1RB_Right;PC3	21.47	22.36
NR	n77	636000	2.1046 RF power output:n77_20MHz_30kHz_636000;39;CP-OFDM 16QAM_Inner_Full;PC3	21.84	22.73
NR	n77	636000	2.1046 RF power output:n77_20MHz_30kHz_636000;40;CP-OFDM 16QAM_Edge_1RB_Left;PC3	21.25	22.14
NR	n77	636000	2.1046 RF power output:n77_20MHz_30kHz_636000;41;CP-OFDM 16QAM_Edge_1RB_Right;PC3	21.09	21.98
NR	n77	636000	2.1046 RF power output:n77_20MHz_30kHz_636000;42;CP-OFDM 16QAM_Outer_Full;PC3	21.66	22.55
NR	n77	636000	2.1046 RF power output:n77_20MHz_30kHz_636000;43;CP-OFDM 64QAM_Inner_1RB_Left;PC3	21.22	22.11
NR	n77	636000	2.1046 RF power output:n77_20MHz_30kHz_636000;44;CP-OFDM 64QAM_Inner_1RB_Right;PC3	21.21	22.1
NR	n77	636000	2.1046 RF power output:n77_20MHz_30kHz_636000;45;CP-OFDM 64QAM_Inner_Full;PC3	21.82	22.71
NR	n77	636000	2.1046 RF power output:n77_20MHz_30kHz_636000;46;CP-OFDM 64QAM_Edge_1RB_Left;PC3	20.59	21.48
NR	n77	636000	2.1046 RF power output:n77_20MHz_30kHz_636000;47;CP-OFDM 64QAM_Edge_1RB_Right;PC3	20.57	21.46
NR	n77	636000	2.1046 RF power output:n77_20MHz_30kHz_636000;48;CP-OFDM 64QAM_Outer_Full;PC3	20.27	21.16
NR	n77	636000	2.1046 RF power output:n77_20MHz_30kHz_636000;49;CP-OFDM 256QAM_Inner_1RB_Left;PC3	19.05	19.94
NR	n77	636000	2.1046 RF power output:n77_20MHz_30kHz_636000;50;CP-OFDM 256QAM_Inner_1RB_Right;PC3	19.1	19.99
NR	n77	636000	2.1046 RF power output:n77_20MHz_30kHz_636000;51;CP-OFDM 256QAM_Inner_Full;PC3	19.48	20.37
NR	n77	636000	2.1046 RF power output:n77_20MHz_30kHz_636000;52;CP-OFDM 256QAM_Edge_1RB_Left;PC3	18.69	19.58
NR	n77	636000	2.1046 RF power output:n77_20MHz_30kHz_636000;53;CP-OFDM 256QAM_Edge_1RB_Right;PC3	18.65	19.54
NR	n77	636000	2.1046 RF power output:n77_20MHz_30kHz_636000;54;CP-OFDM 256QAM_Outer_Full;PC3	18.2	19.09

System	Band	Channel	TestItem	Measured Value	EIRP
NR	n77	631000	2.1046 RF power output:n77_30MHz_30kHz_631000;1;DFT-s-OFDM PI/2 BPSK_Inner_1RB_Left;PC3	22.29	23.18
NR	n77	631000	2.1046 RF power output:n77_30MHz_30kHz_631000;2;DFT-s-OFDM PI/2 BPSK_Inner_1RB_Right;PC3	22.61	23.5
NR	n77	631000	2.1046 RF power output:n77_30MHz_30kHz_631000;3;DFT-s-OFDM PI/2 BPSK_Inner_Full;PC3	22.22	23.11
NR	n77	631000	2.1046 RF power output:n77_30MHz_30kHz_631000;4;DFT-s-OFDM PI/2 BPSK_Edge_1RB_Left;PC3	22	22.89
NR	n77	631000	2.1046 RF power output:n77_30MHz_30kHz_631000;5;DFT-s-OFDM PI/2 BPSK_Edge_1RB_Right;PC3	22.3	23.19
NR	n77	631000	2.1046 RF power output:n77_30MHz_30kHz_631000;6;DFT-s-OFDM PI/2 BPSK_Outer_Full;PC3	22.73	23.62
NR	n77	631000	2.1046 RF power output:n77_30MHz_30kHz_631000;7;DFT-s-OFDM QPSK_Inner_1RB_Left;PC3	22.26	23.15
NR	n77	631000	2.1046 RF power output:n77_30MHz_30kHz_631000;8;DFT-s-OFDM QPSK_Inner_1RB_Right;PC3	22.6	23.49
NR	n77	631000	2.1046 RF power output:n77_30MHz_30kHz_631000;9;DFT-s-OFDM QPSK_Inner_Full;PC3	22.2	23.09
NR	n77	631000	2.1046 RF power output:n77_30MHz_30kHz_631000;10;DFT-s-OFDM QPSK_Edge_1RB_Left;PC3	22	22.89
NR	n77	631000	2.1046 RF power output:n77_30MHz_30kHz_631000;11;DFT-s-OFDM QPSK_Edge_1RB_Right;PC3	22.34	23.23
NR	n77	631000	2.1046 RF power output:n77_30MHz_30kHz_631000;12;DFT-s-OFDM QPSK_Outer_Full;PC3	22.71	23.6
NR	n77	631000	2.1046 RF power output:n77_30MHz_30kHz_631000;13;DFT-s-OFDM 16QAM_Inner_1RB_Left;PC3	22.31	23.2
NR	n77	631000	2.1046 RF power output:n77_30MHz_30kHz_631000;14;DFT-s-OFDM 16QAM_Inner_1RB_Right;PC3	22.56	23.45
NR	n77	631000	2.1046 RF power output:n77_30MHz_30kHz_631000;15;DFT-s-OFDM 16QAM_Inner_Full;PC3	22.24	23.13
NR	n77	631000	2.1046 RF power output:n77_30MHz_30kHz_631000;16;DFT-s-OFDM 16QAM_Edge_1RB_Left;PC3	21.92	22.81
NR	n77	631000	2.1046 RF power output:n77_30MHz_30kHz_631000;17;DFT-s-OFDM 16QAM_Edge_1RB_Right;PC3	22.4	23.29
NR	n77	631000	2.1046 RF power output:n77_30MHz_30kHz_631000;18;DFT-s-OFDM 16QAM_Outer_Full;PC3	22.71	23.6
NR	n77	631000	2.1046 RF power output:n77_30MHz_30kHz_631000;19;DFT-s-OFDM 64QAM_Inner_1RB_Left;PC3	21.78	22.67
NR	n77	631000	2.1046 RF power output:n77_30MHz_30kHz_631000;20;DFT-s-OFDM 64QAM_Inner_1RB_Right;PC3	22.59	23.48
NR	n77	631000	2.1046 RF power output:n77_30MHz_30kHz_631000;21;DFT-s-OFDM 64QAM_Inner_Full;PC3	22.18	23.07
NR	n77	631000	2.1046 RF power output:n77_30MHz_30kHz_631000;22;DFT-s-OFDM 64QAM_Edge_1RB_Left;PC3	21.99	22.88
NR	n77	631000	2.1046 RF power output:n77_30MHz_30kHz_631000;23;DFT-s-OFDM 64QAM_Edge_1RB_Right;PC3	21.86	22.75
NR	n77	631000	2.1046 RF power output:n77_30MHz_30kHz_631000;24;DFT-s-OFDM 64QAM_Outer_Full;PC3	22.49	23.38
NR	n77	631000	2.1046 RF power output:n77_30MHz_30kHz_631000;25;DFT-s-OFDM 256QAM_Inner_1RB_Left;PC3	21.99	22.88
NR	n77	631000	2.1046 RF power output:n77_30MHz_30kHz_631000;26;DFT-s-OFDM 256QAM_Inner_1RB_Right;PC3	22.34	23.23
NR	n77	631000	2.1046 RF power output:n77_30MHz_30kHz_631000;27;DFT-s-OFDM 256QAM_Inner_Full;PC3	21.83	22.72
NR	n77	631000	2.1046 RF power output:n77_30MHz_30kHz_631000;28;DFT-s-OFDM 256QAM_Edge_1RB_Left;PC3	21.64	22.53
NR	n77	631000	2.1046 RF power output:n77_30MHz_30kHz_631000;29;DFT-s-OFDM 256QAM_Edge_1RB_Right;PC3	21.93	22.82
NR	n77	631000	2.1046 RF power output:n77_30MHz_30kHz_631000;30;DFT-s-OFDM 256QAM_Outer_Full;PC3	21.19	22.08
NR	n77	631000	2.1046 RF power output:n77_30MHz_30kHz_631000;31;CP-OFDM QPSK_Inner_1RB_Left;PC3	22.38	23.27
NR	n77	631000	2.1046 RF power output:n77_30MHz_30kHz_631000;32;CP-OFDM QPSK_Inner_1RB_Right;PC3	22.61	23.5
NR	n77	631000	2.1046 RF power output:n77_30MHz_30kHz_631000;33;CP-OFDM QPSK_Inner_Full;PC3	22.35	23.24
NR	n77	631000	2.1046 RF power output:n77_30MHz_30kHz_631000;34;CP-OFDM QPSK_Edge_1RB_Left;PC3	22.13	23.02
NR	n77	631000	2.1046 RF power output:n77_30MHz_30kHz_631000;35;CP-OFDM QPSK_Edge_1RB_Right;PC3	22.42	23.31
NR	n77	631000	2.1046 RF power output:n77_30MHz_30kHz_631000;36;CP-OFDM QPSK_Outer_Full;PC3	22.8	23.69
NR	n77	631000	2.1046 RF power output:n77_30MHz_30kHz_631000;37;CP-OFDM 16QAM_Inner_1RB_Left;PC3	22.46	23.35
NR	n77	631000	2.1046 RF power output:n77_30MHz_30kHz_631000;38;CP-OFDM 16QAM_Inner_1RB_Right;PC3	22.81	23.7
NR	n77	631000	2.1046 RF power output:n77_30MHz_30kHz_631000;39;CP-OFDM 16QAM_Inner_Full;PC3	22.34	23.23
NR	n77	631000	2.1046 RF power output:n77_30MHz_30kHz_631000;40;CP-OFDM 16QAM_Edge_1RB_Left;PC3	22.32	23.21
NR	n77	631000	2.1046 RF power output:n77_30MHz_30kHz_631000;41;CP-OFDM 16QAM_Edge_1RB_Right;PC3	22.78	23.67
NR	n77	631000	2.1046 RF power output:n77_30MHz_30kHz_631000;42;CP-OFDM 16QAM_Outer_Full;PC3	22.74	23.63
NR	n77	631000	2.1046 RF power output:n77_30MHz_30kHz_631000;43;CP-OFDM 64QAM_Inner_1RB_Left;PC3	21.97	22.86
NR	n77	631000	2.1046 RF power output:n77_30MHz_30kHz_631000;44;CP-OFDM 64QAM_Inner_1RB_Right;PC3	22.73	23.62
NR	n77	631000	2.1046 RF power output:n77_30MHz_30kHz_631000;45;CP-OFDM 64QAM_Inner_Full;PC3	22.31	23.2
NR	n77	631000	2.1046 RF power output:n77_30MHz_30kHz_631000;46;CP-OFDM 64QAM_Edge_1RB_Left;PC3	21.76	22.65
NR	n77	631000	2.1046 RF power output:n77_30MHz_30kHz_631000;47;CP-OFDM 64QAM_Edge_1RB_Right;PC3	22.04	22.93
NR	n77	631000	2.1046 RF power output:n77_30MHz_30kHz_631000;48;CP-OFDM 64QAM_Outer_Full;PC3	21.31	22.2
NR	n77	631000	2.1046 RF power output:n77_30MHz_30kHz_631000;49;CP-OFDM 256QAM_Inner_1RB_Left;PC3	20.15	21.04
NR	n77	631000	2.1046 RF power output:n77_30MHz_30kHz_631000;50;CP-OFDM 256QAM_Inner_1RB_Right;PC3	20.44	21.33
NR	n77	631000	2.1046 RF power output:n77_30MHz_30kHz_631000;51;CP-OFDM 256QAM_Inner_Full;PC3	19.79	20.68
NR	n77	631000	2.1046 RF power output:n77_30MHz_30kHz_631000;52;CP-OFDM 256QAM_Edge_1RB_Left;PC3	19.7	20.59
NR	n77	631000	2.1046 RF power output:n77_30MHz_30kHz_631000;53;CP-OFDM 256QAM_Edge_1RB_Right;PC3	19.95	20.84
NR	n77	631000	2.1046 RF power output:n77_30MHz_30kHz_631000;54;CP-OFDM 256QAM_Outer_Full;PC3	19.25	20.14
NR	n77	633334	2.1046 RF power output:n77_30MHz_30kHz_633334;1;DFT-s-OFDM PI/2 BPSK_Inner_1RB_Left;PC3	22.47	23.36
NR	n77	633334	2.1046 RF power output:n77_30MHz_30kHz_633334;2;DFT-s-OFDM PI/2 BPSK_Inner_1RB_Right;PC3	22.56	23.45
NR	n77	633334	2.1046 RF power output:n77_30MHz_30kHz_633334;3;DFT-s-OFDM PI/2 BPSK_Inner_Full;PC3	22.29	23.18
NR	n77	633334	2.1046 RF power output:n77_30MHz_30kHz_633334;4;DFT-s-OFDM PI/2 BPSK_Edge_1RB_Left;PC3	22.25	23.14
NR	n77	633334	2.1046 RF power output:n77_30MHz_30kHz_633334;5;DFT-s-OFDM PI/2 BPSK_Edge_1RB_Right;PC3	22.26	23.15
NR	n77	633334	2.1046 RF power output:n77_30MHz_30kHz_633334;6;DFT-s-OFDM PI/2 BPSK_Outer_Full;PC3	22.82	23.71
NR	n77	633334	2.1046 RF power output:n77_30MHz_30kHz_633334;7;DFT-s-OFDM QPSK_Inner_1RB_Left;PC3	22.48	23.37
NR	n77	633334	2.1046 RF power output:n77_30MHz_30kHz_633334;8;DFT-s-OFDM QPSK_Inner_1RB_Right;PC3	22.59	23.48
NR	n77	633334	2.1046 RF power output:n77_30MHz_30kHz_633334;9;DFT-s-OFDM QPSK_Inner_Full;PC3	22.29	23.18
NR	n77	633334	2.1046 RF power output:n77_30MHz_30kHz_633334;10;DFT-s-OFDM QPSK_Edge_1RB_Left;PC3	22.25	23.14
NR	n77	633334	2.1046 RF power output:n77_30MHz_30kHz_633334;11;DFT-s-OFDM QPSK_Edge_1RB_Right;PC3	22.29	23.18
NR	n77	633334	2.1046 RF power output:n77_30MHz_30kHz_633334;12;DFT-s-OFDM QPSK_Outer_Full;PC3	22.82	23.71
NR	n77	633334	2.1046 RF power output:n77_30MHz_30kHz_633334;13;DFT-s-OFDM 16QAM_Inner_1RB_Left;PC3	22.58	23.47
NR	n77	633334	2.1046 RF power output:n77_30MHz_30kHz_633334;14;DFT-s-OFDM 16QAM_Inner_1RB_Right;PC3	22.68	23.57
NR	n77	633334	2.1046 RF power output:n77_30MHz_30kHz_633334;15;DFT-s-OFDM 16QAM_Inner_Full;PC3	22.35	23.24
NR	n77	633334	2.1046 RF power output:n77_30MHz_30kHz_633334;16;DFT-s-OFDM 16QAM_Edge_1RB_Left;PC3	22.36	23.25
NR	n77	633334	2.1046 RF power output:n77_30MHz_30kHz_633334;17;DFT-s-OFDM 16QAM_Edge_1RB_Right;PC3	22.4	23.29
NR	n77	633334	2.1046 RF power output:n77_30MHz_30kHz_633334;18;DFT-s-OFDM 16QAM_Outer_Full;PC3	22.8	23.69
NR	n77	633334	2.1046 RF power output:n77_30MHz_30kHz_633334;19;DFT-s-OFDM 64QAM_Inner_1RB_Left;PC3	22.12	23.01
NR	n77	633334	2.1046 RF power output:n77_30MHz_30kHz_633334;20;DFT-s-OFDM 64QAM_Inner_1RB_Right;PC3	22.22	23.11
NR	n77	633334	2.1046 RF power output:n77_30MHz_30kHz_633334;21;DFT-s-OFDM 64QAM_Inner_Full;PC3	22.3	23.19
NR	n77	633334	2.1046 RF power output:n77_30MHz_30kHz_633334;22;DFT-s-OFDM 64QAM_Edge_1RB_Left;PC3	22.2	23.09
NR	n77	633334	2.1046 RF power output:n77_30MHz_30kHz_633334;23;DFT-s-OFDM 64QAM_Edge_1RB_Right;PC3	22.17	23.06
NR	n77	633334	2.1046 RF power output:n77_30MHz_30kHz_633334;24;DFT-s-OFDM 64QAM_Outer_Full;PC3	22.61	23.5
NR	n77	633334	2.1046 RF power output:n77_30MHz_30kHz_633334;25;DFT-s-OFDM 256QAM_Inner_1RB_Left;PC3	22.13	23.02
NR	n77	633334	2.1046 RF power output:n77_30MHz_30kHz_633334;26;DFT-s-OFDM 256QAM_Inner_1RB_Right;PC3	22.31	23.2
NR	n77	633334	2.1046 RF power output:n77_30MHz_30kHz_633334;27;DFT-s-OFDM 256QAM_Inner_Full;PC3	21.85	22.74

System	Band	Channel	TestItem	Measured Value	EIRP
NR	n77	633334	2.1046 RF power output:n77_30MHz_30kHz_633334;28;DFT-s-OFDM 256QAM_Edge_1RB_Left;PC3	21.76	22.65
NR	n77	633334	2.1046 RF power output:n77_30MHz_30kHz_633334;29;DFT-s-OFDM 256QAM_Edge_1RB_Right;PC3	21.88	22.77
NR	n77	633334	2.1046 RF power output:n77_30MHz_30kHz_633334;30;DFT-s-OFDM 256QAM_Outer_Full;PC3	21.21	22.1
NR	n77	633334	2.1046 RF power output:n77_30MHz_30kHz_633334;31;CP-OFDM QPSK_Inner_1RB_Left;PC3	22.72	23.61
NR	n77	633334	2.1046 RF power output:n77_30MHz_30kHz_633334;32;CP-OFDM QPSK_Inner_1RB_Right;PC3	22.73	23.62
NR	n77	633334	2.1046 RF power output:n77_30MHz_30kHz_633334;33;CP-OFDM QPSK_Inner_Full;PC3	22.39	23.28
NR	n77	633334	2.1046 RF power output:n77_30MHz_30kHz_633334;34;CP-OFDM QPSK_Edge_1RB_Left;PC3	22.43	23.32
NR	n77	633334	2.1046 RF power output:n77_30MHz_30kHz_633334;35;CP-OFDM QPSK_Edge_1RB_Right;PC3	22.55	23.44
NR	n77	633334	2.1046 RF power output:n77_30MHz_30kHz_633334;36;CP-OFDM QPSK_Outer_Full;PC3	22.86	23.75
NR	n77	633334	2.1046 RF power output:n77_30MHz_30kHz_633334;37;CP-OFDM 16QAM_Inner_1RB_Left;PC3	22.74	23.63
NR	n77	633334	2.1046 RF power output:n77_30MHz_30kHz_633334;38;CP-OFDM 16QAM_Inner_1RB_Right;PC3	22.82	23.71
NR	n77	633334	2.1046 RF power output:n77_30MHz_30kHz_633334;39;CP-OFDM 16QAM_Inner_Full;PC3	22.41	23.3
NR	n77	633334	2.1046 RF power output:n77_30MHz_30kHz_633334;40;CP-OFDM 16QAM_Edge_1RB_Left;PC3	22.44	23.33
NR	n77	633334	2.1046 RF power output:n77_30MHz_30kHz_633334;41;CP-OFDM 16QAM_Edge_1RB_Right;PC3	22.59	23.48
NR	n77	633334	2.1046 RF power output:n77_30MHz_30kHz_633334;42;CP-OFDM 16QAM_Outer_Full;PC3	22.84	23.73
NR	n77	633334	2.1046 RF power output:n77_30MHz_30kHz_633334;43;CP-OFDM 64QAM_Inner_1RB_Left;PC3	22.44	23.33
NR	n77	633334	2.1046 RF power output:n77_30MHz_30kHz_633334;44;CP-OFDM 64QAM_Inner_1RB_Right;PC3	22.63	23.52
NR	n77	633334	2.1046 RF power output:n77_30MHz_30kHz_633334;45;CP-OFDM 64QAM_Inner_Full;PC3	22.38	23.27
NR	n77	633334	2.1046 RF power output:n77_30MHz_30kHz_633334;46;CP-OFDM 64QAM_Edge_1RB_Left;PC3	21.6	22.49
NR	n77	633334	2.1046 RF power output:n77_30MHz_30kHz_633334;47;CP-OFDM 64QAM_Edge_1RB_Right;PC3	22.06	22.95
NR	n77	633334	2.1046 RF power output:n77_30MHz_30kHz_633334;48;CP-OFDM 64QAM_Outer_Full;PC3	21.42	22.31
NR	n77	633334	2.1046 RF power output:n77_30MHz_30kHz_633334;49;CP-OFDM 256QAM_Inner_1RB_Left;PC3	20.31	21.2
NR	n77	633334	2.1046 RF power output:n77_30MHz_30kHz_633334;50;CP-OFDM 256QAM_Inner_1RB_Right;PC3	20.34	21.23
NR	n77	633334	2.1046 RF power output:n77_30MHz_30kHz_633334;51;CP-OFDM 256QAM_Inner_Full;PC3	19.84	20.73
NR	n77	633334	2.1046 RF power output:n77_30MHz_30kHz_633334;52;CP-OFDM 256QAM_Edge_1RB_Left;PC3	19.88	20.77
NR	n77	633334	2.1046 RF power output:n77_30MHz_30kHz_633334;53;CP-OFDM 256QAM_Edge_1RB_Right;PC3	19.95	20.84
NR	n77	633334	2.1046 RF power output:n77_30MHz_30kHz_633334;54;CP-OFDM 256QAM_Outer_Full;PC3	19.28	20.17
NR	n77	635666	2.1046 RF power output:n77_30MHz_30kHz_635666;1;DFT-s-OFDM PI/2 BPSK_Inner_1RB_Left;PC3	22.76	23.65
NR	n77	635666	2.1046 RF power output:n77_30MHz_30kHz_635666;2;DFT-s-OFDM PI/2 BPSK_Inner_1RB_Right;PC3	22.66	23.55
NR	n77	635666	2.1046 RF power output:n77_30MHz_30kHz_635666;3;DFT-s-OFDM PI/2 BPSK_Inner_Full;PC3	22.36	23.25
NR	n77	635666	2.1046 RF power output:n77_30MHz_30kHz_635666;4;DFT-s-OFDM PI/2 BPSK_Edge_1RB_Left;PC3	22.48	23.37
NR	n77	635666	2.1046 RF power output:n77_30MHz_30kHz_635666;5;DFT-s-OFDM PI/2 BPSK_Edge_1RB_Right;PC3	22.26	23.15
NR	n77	635666	2.1046 RF power output:n77_30MHz_30kHz_635666;6;DFT-s-OFDM PI/2 BPSK_Outer_Full;PC3	22.92	23.81
NR	n77	635666	2.1046 RF power output:n77_30MHz_30kHz_635666;7;DFT-s-OFDM QPSK_Inner_1RB_Left;PC3	22.7	23.59
NR	n77	635666	2.1046 RF power output:n77_30MHz_30kHz_635666;8;DFT-s-OFDM QPSK_Inner_1RB_Right;PC3	22.61	23.5
NR	n77	635666	2.1046 RF power output:n77_30MHz_30kHz_635666;9;DFT-s-OFDM QPSK_Inner_Full;PC3	22.37	23.26
NR	n77	635666	2.1046 RF power output:n77_30MHz_30kHz_635666;10;DFT-s-OFDM QPSK_Edge_1RB_Left;PC3	22.51	23.4
NR	n77	635666	2.1046 RF power output:n77_30MHz_30kHz_635666;11;DFT-s-OFDM QPSK_Edge_1RB_Right;PC3	22.34	23.23
NR	n77	635666	2.1046 RF power output:n77_30MHz_30kHz_635666;12;DFT-s-OFDM QPSK_Outer_Full;PC3	22.92	23.81
NR	n77	635666	2.1046 RF power output:n77_30MHz_30kHz_635666;13;DFT-s-OFDM 16QAM_Inner_1RB_Left;PC3	22.8	23.69
NR	n77	635666	2.1046 RF power output:n77_30MHz_30kHz_635666;14;DFT-s-OFDM 16QAM_Inner_1RB_Right;PC3	22.52	23.41
NR	n77	635666	2.1046 RF power output:n77_30MHz_30kHz_635666;15;DFT-s-OFDM 16QAM_Inner_Full;PC3	22.44	23.33
NR	n77	635666	2.1046 RF power output:n77_30MHz_30kHz_635666;16;DFT-s-OFDM 16QAM_Edge_1RB_Left;PC3	22.59	23.48
NR	n77	635666	2.1046 RF power output:n77_30MHz_30kHz_635666;17;DFT-s-OFDM 16QAM_Edge_1RB_Right;PC3	22.41	23.3
NR	n77	635666	2.1046 RF power output:n77_30MHz_30kHz_635666;18;DFT-s-OFDM 16QAM_Outer_Full;PC3	22.92	23.81
NR	n77	635666	2.1046 RF power output:n77_30MHz_30kHz_635666;19;DFT-s-OFDM 64QAM_Inner_1RB_Left;PC3	22.25	23.14
NR	n77	635666	2.1046 RF power output:n77_30MHz_30kHz_635666;20;DFT-s-OFDM 64QAM_Inner_1RB_Right;PC3	22.16	23.05
NR	n77	635666	2.1046 RF power output:n77_30MHz_30kHz_635666;21;DFT-s-OFDM 64QAM_Inner_Full;PC3	22.38	23.27
NR	n77	635666	2.1046 RF power output:n77_30MHz_30kHz_635666;22;DFT-s-OFDM 64QAM_Edge_1RB_Left;PC3	22.48	23.37
NR	n77	635666	2.1046 RF power output:n77_30MHz_30kHz_635666;23;DFT-s-OFDM 64QAM_Edge_1RB_Right;PC3	21.87	22.76
NR	n77	635666	2.1046 RF power output:n77_30MHz_30kHz_635666;24;DFT-s-OFDM 64QAM_Outer_Full;PC3	22.68	23.57
NR	n77	635666	2.1046 RF power output:n77_30MHz_30kHz_635666;25;DFT-s-OFDM 256QAM_Inner_1RB_Left;PC3	22.48	23.37
NR	n77	635666	2.1046 RF power output:n77_30MHz_30kHz_635666;26;DFT-s-OFDM 256QAM_Inner_1RB_Right;PC3	22.38	23.27
NR	n77	635666	2.1046 RF power output:n77_30MHz_30kHz_635666;27;DFT-s-OFDM 256QAM_Inner_Full;PC3	22	22.89
NR	n77	635666	2.1046 RF power output:n77_30MHz_30kHz_635666;28;DFT-s-OFDM 256QAM_Edge_1RB_Left;PC3	22.12	23.01
NR	n77	635666	2.1046 RF power output:n77_30MHz_30kHz_635666;29;DFT-s-OFDM 256QAM_Edge_1RB_Right;PC3	21.86	22.75
NR	n77	635666	2.1046 RF power output:n77_30MHz_30kHz_635666;30;DFT-s-OFDM 256QAM_Outer_Full;PC3	21.29	22.18
NR	n77	635666	2.1046 RF power output:n77_30MHz_30kHz_635666;31;CP-OFDM QPSK_Inner_1RB_Left;PC3	22.82	23.71
NR	n77	635666	2.1046 RF power output:n77_30MHz_30kHz_635666;32;CP-OFDM QPSK_Inner_1RB_Right;PC3	22.63	23.52
NR	n77	635666	2.1046 RF power output:n77_30MHz_30kHz_635666;33;CP-OFDM QPSK_Inner_Full;PC3	22.46	23.35
NR	n77	635666	2.1046 RF power output:n77_30MHz_30kHz_635666;34;CP-OFDM QPSK_Edge_1RB_Left;PC3	22.7	23.59
NR	n77	635666	2.1046 RF power output:n77_30MHz_30kHz_635666;35;CP-OFDM QPSK_Edge_1RB_Right;PC3	22.46	23.35
NR	n77	635666	2.1046 RF power output:n77_30MHz_30kHz_635666;36;CP-OFDM QPSK_Outer_Full;PC3	22.92	23.81
NR	n77	635666	2.1046 RF power output:n77_30MHz_30kHz_635666;37;CP-OFDM 16QAM_Inner_1RB_Left;PC3	22.95	23.84
NR	n77	635666	2.1046 RF power output:n77_30MHz_30kHz_635666;38;CP-OFDM 16QAM_Inner_1RB_Right;PC3	22.64	23.53
NR	n77	635666	2.1046 RF power output:n77_30MHz_30kHz_635666;39;CP-OFDM 16QAM_Inner_Full;PC3	22.46	23.35
NR	n77	635666	2.1046 RF power output:n77_30MHz_30kHz_635666;40;CP-OFDM 16QAM_Edge_1RB_Left;PC3	22.75	23.64
NR	n77	635666	2.1046 RF power output:n77_30MHz_30kHz_635666;41;CP-OFDM 16QAM_Edge_1RB_Right;PC3	22.7	23.59
NR	n77	635666	2.1046 RF power output:n77_30MHz_30kHz_635666;42;CP-OFDM 16QAM_Outer_Full;PC3	22.87	23.76
NR	n77	635666	2.1046 RF power output:n77_30MHz_30kHz_635666;43;CP-OFDM 64QAM_Inner_1RB_Left;PC3	22.38	23.27
NR	n77	635666	2.1046 RF power output:n77_30MHz_30kHz_635666;44;CP-OFDM 64QAM_Inner_1RB_Right;PC3	22.24	23.13
NR	n77	635666	2.1046 RF power output:n77_30MHz_30kHz_635666;45;CP-OFDM 64QAM_Inner_Full;PC3	22.42	23.31
NR	n77	635666	2.1046 RF power output:n77_30MHz_30kHz_635666;46;CP-OFDM 64QAM_Edge_1RB_Left;PC3	22.24	23.13
NR	n77	635666	2.1046 RF power output:n77_30MHz_30kHz_635666;47;CP-OFDM 64QAM_Edge_1RB_Right;PC3	22.15	23.04
NR	n77	635666	2.1046 RF power output:n77_30MHz_30kHz_635666;48;CP-OFDM 64QAM_Outer_Full;PC3	21.44	22.33
NR	n77	635666	2.1046 RF power output:n77_30MHz_30kHz_635666;49;CP-OFDM 256QAM_Inner_1RB_Left;PC3	20.57	21.46
NR	n77	635666	2.1046 RF power output:n77_30MHz_30kHz_635666;50;CP-OFDM 256QAM_Inner_1RB_Right;PC3	20.4	21.29
NR	n77	635666	2.1046 RF power output:n77_30MHz_30kHz_635666;51;CP-OFDM 256QAM_Inner_Full;PC3	19.99	20.88
NR	n77	635666	2.1046 RF power output:n77_30MHz_30kHz_635666;52;CP-OFDM 256QAM_Edge_1RB_Left;PC3	20.1	20.99
NR	n77	635666	2.1046 RF power output:n77_30MHz_30kHz_635666;53;CP-OFDM 256QAM_Edge_1RB_Right;PC3	19.93	20.82
NR	n77	635666	2.1046 RF power output:n77_30MHz_30kHz_635666;54;CP-OFDM 256QAM_Outer_Full;PC3	19.3	20.19

System	Band	Channel	TestItem	Measured Value	EIRP
NR	n77	631334	2.1046 RF power output:n77_40MHz_30kHz_631334;1;DFT-s-OFDM PI/2 BPSK_Inner_1RB_Left;PC3	21.62	22.51
NR	n77	631334	2.1046 RF power output:n77_40MHz_30kHz_631334;2;DFT-s-OFDM PI/2 BPSK_Inner_1RB_Right;PC3	21.89	22.78
NR	n77	631334	2.1046 RF power output:n77_40MHz_30kHz_631334;3;DFT-s-OFDM PI/2 BPSK_Inner_Full;PC3	22.31	23.2
NR	n77	631334	2.1046 RF power output:n77_40MHz_30kHz_631334;4;DFT-s-OFDM PI/2 BPSK_Edge_1RB_Left;PC3	21.36	22.25
NR	n77	631334	2.1046 RF power output:n77_40MHz_30kHz_631334;5;DFT-s-OFDM PI/2 BPSK_Edge_1RB_Right;PC3	21.6	22.49
NR	n77	631334	2.1046 RF power output:n77_40MHz_30kHz_631334;6;DFT-s-OFDM PI/2 BPSK_Outer_Full;PC3	22.54	23.43
NR	n77	631334	2.1046 RF power output:n77_40MHz_30kHz_631334;7;DFT-s-OFDM QPSK_Inner_1RB_Left;PC3	21.61	22.5
NR	n77	631334	2.1046 RF power output:n77_40MHz_30kHz_631334;8;DFT-s-OFDM QPSK_Inner_1RB_Right;PC3	21.88	22.77
NR	n77	631334	2.1046 RF power output:n77_40MHz_30kHz_631334;9;DFT-s-OFDM QPSK_Inner_Full;PC3	22.29	23.18
NR	n77	631334	2.1046 RF power output:n77_40MHz_30kHz_631334;10;DFT-s-OFDM QPSK_Edge_1RB_Left;PC3	21.36	22.25
NR	n77	631334	2.1046 RF power output:n77_40MHz_30kHz_631334;11;DFT-s-OFDM QPSK_Edge_1RB_Right;PC3	21.62	22.51
NR	n77	631334	2.1046 RF power output:n77_40MHz_30kHz_631334;12;DFT-s-OFDM QPSK_Outer_Full;PC3	22.54	23.43
NR	n77	631334	2.1046 RF power output:n77_40MHz_30kHz_631334;13;DFT-s-OFDM 16QAM_Inner_1RB_Left;PC3	21.57	22.46
NR	n77	631334	2.1046 RF power output:n77_40MHz_30kHz_631334;14;DFT-s-OFDM 16QAM_Inner_1RB_Right;PC3	21.82	22.71
NR	n77	631334	2.1046 RF power output:n77_40MHz_30kHz_631334;15;DFT-s-OFDM 16QAM_Inner_Full;PC3	22.31	23.2
NR	n77	631334	2.1046 RF power output:n77_40MHz_30kHz_631334;16;DFT-s-OFDM 16QAM_Edge_1RB_Left;PC3	21.29	22.18
NR	n77	631334	2.1046 RF power output:n77_40MHz_30kHz_631334;17;DFT-s-OFDM 16QAM_Edge_1RB_Right;PC3	21.57	22.46
NR	n77	631334	2.1046 RF power output:n77_40MHz_30kHz_631334;18;DFT-s-OFDM 16QAM_Outer_Full;PC3	22.49	23.38
NR	n77	631334	2.1046 RF power output:n77_40MHz_30kHz_631334;19;DFT-s-OFDM 64QAM_Inner_1RB_Left;PC3	21.73	22.62
NR	n77	631334	2.1046 RF power output:n77_40MHz_30kHz_631334;20;DFT-s-OFDM 64QAM_Inner_1RB_Right;PC3	22.04	22.93
NR	n77	631334	2.1046 RF power output:n77_40MHz_30kHz_631334;21;DFT-s-OFDM 64QAM_Inner_Full;PC3	22.29	23.18
NR	n77	631334	2.1046 RF power output:n77_40MHz_30kHz_631334;22;DFT-s-OFDM 64QAM_Edge_1RB_Left;PC3	21.07	21.96
NR	n77	631334	2.1046 RF power output:n77_40MHz_30kHz_631334;23;DFT-s-OFDM 64QAM_Edge_1RB_Right;PC3	21.36	22.25
NR	n77	631334	2.1046 RF power output:n77_40MHz_30kHz_631334;24;DFT-s-OFDM 64QAM_Outer_Full;PC3	22.29	23.18
NR	n77	631334	2.1046 RF power output:n77_40MHz_30kHz_631334;25;DFT-s-OFDM 256QAM_Inner_1RB_Left;PC3	21.42	22.31
NR	n77	631334	2.1046 RF power output:n77_40MHz_30kHz_631334;26;DFT-s-OFDM 256QAM_Inner_1RB_Right;PC3	21.63	22.52
NR	n77	631334	2.1046 RF power output:n77_40MHz_30kHz_631334;27;DFT-s-OFDM 256QAM_Inner_Full;PC3	21.94	22.83
NR	n77	631334	2.1046 RF power output:n77_40MHz_30kHz_631334;28;DFT-s-OFDM 256QAM_Edge_1RB_Left;PC3	21.03	21.92
NR	n77	631334	2.1046 RF power output:n77_40MHz_30kHz_631334;29;DFT-s-OFDM 256QAM_Edge_1RB_Right;PC3	21.31	22.2
NR	n77	631334	2.1046 RF power output:n77_40MHz_30kHz_631334;30;DFT-s-OFDM 256QAM_Outer_Full;PC3	21.12	22.01
NR	n77	631334	2.1046 RF power output:n77_40MHz_30kHz_631334;31;CP-OFDM QPSK_Inner_1RB_Left;PC3	21.84	22.73
NR	n77	631334	2.1046 RF power output:n77_40MHz_30kHz_631334;32;CP-OFDM QPSK_Inner_1RB_Right;PC3	22.16	23.05
NR	n77	631334	2.1046 RF power output:n77_40MHz_30kHz_631334;33;CP-OFDM QPSK_Inner_Full;PC3	22.37	23.26
NR	n77	631334	2.1046 RF power output:n77_40MHz_30kHz_631334;34;CP-OFDM QPSK_Edge_1RB_Left;PC3	21.57	22.46
NR	n77	631334	2.1046 RF power output:n77_40MHz_30kHz_631334;35;CP-OFDM QPSK_Edge_1RB_Right;PC3	21.87	22.76
NR	n77	631334	2.1046 RF power output:n77_40MHz_30kHz_631334;36;CP-OFDM QPSK_Outer_Full;PC3	22.53	23.42
NR	n77	631334	2.1046 RF power output:n77_40MHz_30kHz_631334;37;CP-OFDM 16QAM_Inner_1RB_Left;PC3	21.93	22.82
NR	n77	631334	2.1046 RF power output:n77_40MHz_30kHz_631334;38;CP-OFDM 16QAM_Inner_1RB_Right;PC3	22.24	23.13
NR	n77	631334	2.1046 RF power output:n77_40MHz_30kHz_631334;39;CP-OFDM 16QAM_Inner_Full;PC3	22.3	23.19
NR	n77	631334	2.1046 RF power output:n77_40MHz_30kHz_631334;40;CP-OFDM 16QAM_Edge_1RB_Left;PC3	21.71	22.6
NR	n77	631334	2.1046 RF power output:n77_40MHz_30kHz_631334;41;CP-OFDM 16QAM_Edge_1RB_Right;PC3	21.93	22.82
NR	n77	631334	2.1046 RF power output:n77_40MHz_30kHz_631334;42;CP-OFDM 16QAM_Outer_Full;PC3	22.54	23.43
NR	n77	631334	2.1046 RF power output:n77_40MHz_30kHz_631334;43;CP-OFDM 64QAM_Inner_1RB_Left;PC3	21.56	22.45
NR	n77	631334	2.1046 RF power output:n77_40MHz_30kHz_631334;44;CP-OFDM 64QAM_Inner_1RB_Right;PC3	21.54	22.43
NR	n77	631334	2.1046 RF power output:n77_40MHz_30kHz_631334;45;CP-OFDM 64QAM_Inner_Full;PC3	22.33	23.22
NR	n77	631334	2.1046 RF power output:n77_40MHz_30kHz_631334;46;CP-OFDM 64QAM_Edge_1RB_Left;PC3	21.1	21.99
NR	n77	631334	2.1046 RF power output:n77_40MHz_30kHz_631334;47;CP-OFDM 64QAM_Edge_1RB_Right;PC3	21.38	22.27
NR	n77	631334	2.1046 RF power output:n77_40MHz_30kHz_631334;48;CP-OFDM 64QAM_Outer_Full;PC3	21.09	21.98
NR	n77	631334	2.1046 RF power output:n77_40MHz_30kHz_631334;49;CP-OFDM 256QAM_Inner_1RB_Left;PC3	19.28	20.17
NR	n77	631334	2.1046 RF power output:n77_40MHz_30kHz_631334;50;CP-OFDM 256QAM_Inner_1RB_Right;PC3	19.58	20.47
NR	n77	631334	2.1046 RF power output:n77_40MHz_30kHz_631334;51;CP-OFDM 256QAM_Inner_Full;PC3	19.75	20.64
NR	n77	631334	2.1046 RF power output:n77_40MHz_30kHz_631334;52;CP-OFDM 256QAM_Edge_1RB_Left;PC3	19.1	19.99
NR	n77	631334	2.1046 RF power output:n77_40MHz_30kHz_631334;53;CP-OFDM 256QAM_Edge_1RB_Right;PC3	19.31	20.2
NR	n77	631334	2.1046 RF power output:n77_40MHz_30kHz_631334;54;CP-OFDM 256QAM_Outer_Full;PC3	18.98	19.87
NR	n77	633334	2.1046 RF power output:n77_40MHz_30kHz_633334;1;DFT-s-OFDM PI/2 BPSK_Inner_1RB_Left;PC3	20.7	21.59
NR	n77	633334	2.1046 RF power output:n77_40MHz_30kHz_633334;2;DFT-s-OFDM PI/2 BPSK_Inner_1RB_Right;PC3	21.85	22.74
NR	n77	633334	2.1046 RF power output:n77_40MHz_30kHz_633334;3;DFT-s-OFDM PI/2 BPSK_Inner_Full;PC3	22.27	23.16
NR	n77	633334	2.1046 RF power output:n77_40MHz_30kHz_633334;4;DFT-s-OFDM PI/2 BPSK_Edge_1RB_Left;PC3	21.57	22.46
NR	n77	633334	2.1046 RF power output:n77_40MHz_30kHz_633334;5;DFT-s-OFDM PI/2 BPSK_Edge_1RB_Right;PC3	21.55	22.44
NR	n77	633334	2.1046 RF power output:n77_40MHz_30kHz_633334;6;DFT-s-OFDM PI/2 BPSK_Outer_Full;PC3	22.57	23.46
NR	n77	633334	2.1046 RF power output:n77_40MHz_30kHz_633334;7;DFT-s-OFDM QPSK_Inner_1RB_Left;PC3	21.84	22.73
NR	n77	633334	2.1046 RF power output:n77_40MHz_30kHz_633334;8;DFT-s-OFDM QPSK_Inner_1RB_Right;PC3	21.86	22.75
NR	n77	633334	2.1046 RF power output:n77_40MHz_30kHz_633334;9;DFT-s-OFDM QPSK_Inner_Full;PC3	22.27	23.16
NR	n77	633334	2.1046 RF power output:n77_40MHz_30kHz_633334;10;DFT-s-OFDM QPSK_Edge_1RB_Left;PC3	21.74	22.63
NR	n77	633334	2.1046 RF power output:n77_40MHz_30kHz_633334;11;DFT-s-OFDM QPSK_Edge_1RB_Right;PC3	21.72	22.61
NR	n77	633334	2.1046 RF power output:n77_40MHz_30kHz_633334;12;DFT-s-OFDM QPSK_Outer_Full;PC3	22.54	23.43
NR	n77	633334	2.1046 RF power output:n77_40MHz_30kHz_633334;13;DFT-s-OFDM 16QAM_Inner_1RB_Left;PC3	21.75	22.64
NR	n77	633334	2.1046 RF power output:n77_40MHz_30kHz_633334;14;DFT-s-OFDM 16QAM_Inner_1RB_Right;PC3	21.77	22.66
NR	n77	633334	2.1046 RF power output:n77_40MHz_30kHz_633334;15;DFT-s-OFDM 16QAM_Inner_Full;PC3	22.29	23.18
NR	n77	633334	2.1046 RF power output:n77_40MHz_30kHz_633334;16;DFT-s-OFDM 16QAM_Edge_1RB_Left;PC3	21.56	22.45
NR	n77	633334	2.1046 RF power output:n77_40MHz_30kHz_633334;17;DFT-s-OFDM 16QAM_Edge_1RB_Right;PC3	21.52	22.41
NR	n77	633334	2.1046 RF power output:n77_40MHz_30kHz_633334;18;DFT-s-OFDM 16QAM_Outer_Full;PC3	22.56	23.45
NR	n77	633334	2.1046 RF power output:n77_40MHz_30kHz_633334;19;DFT-s-OFDM 64QAM_Inner_1RB_Left;PC3	21.67	22.56
NR	n77	633334	2.1046 RF power output:n77_40MHz_30kHz_633334;20;DFT-s-OFDM 64QAM_Inner_1RB_Right;PC3	21.7	22.59
NR	n77	633334	2.1046 RF power output:n77_40MHz_30kHz_633334;21;DFT-s-OFDM 64QAM_Inner_Full;PC3	22.3	23.19
NR	n77	633334	2.1046 RF power output:n77_40MHz_30kHz_633334;22;DFT-s-OFDM 64QAM_Edge_1RB_Left;PC3	21.52	22.41
NR	n77	633334	2.1046 RF power output:n77_40MHz_30kHz_633334;23;DFT-s-OFDM 64QAM_Edge_1RB_Right;PC3	21.35	22.24
NR	n77	633334	2.1046 RF power output:n77_40MHz_30kHz_633334;24;DFT-s-OFDM 64QAM_Outer_Full;PC3	22.32	23.21
NR	n77	633334	2.1046 RF power output:n77_40MHz_30kHz_633334;25;DFT-s-OFDM 256QAM_Inner_1RB_Left;PC3	21.61	22.5
NR	n77	633334	2.1046 RF power output:n77_40MHz_30kHz_633334;26;DFT-s-OFDM 256QAM_Inner_1RB_Right;PC3	21.55	22.44
NR	n77	633334	2.1046 RF power output:n77_40MHz_30kHz_633334;27;DFT-s-OFDM 256QAM_Inner_Full;PC3	21.88	22.77

System	Band	Channel	TestItem	Measured Value	EIRP
NR	n77	633334	2.1046 RF power output:n77_40MHz_30kHz_633334;28;DFT-s-OFDM 256QAM_Edge_1RB_Left;PC3	21.2	22.09
NR	n77	633334	2.1046 RF power output:n77_40MHz_30kHz_633334;29;DFT-s-OFDM 256QAM_Edge_1RB_Right;PC3	21.21	22.1
NR	n77	633334	2.1046 RF power output:n77_40MHz_30kHz_633334;30;DFT-s-OFDM 256QAM_Outer_Full;PC3	21.07	21.96
NR	n77	633334	2.1046 RF power output:n77_40MHz_30kHz_633334;31;CP-OFDM QPSK_Inner_1RB_Left;PC3	21.97	22.86
NR	n77	633334	2.1046 RF power output:n77_40MHz_30kHz_633334;32;CP-OFDM QPSK_Inner_1RB_Right;PC3	22.03	22.92
NR	n77	633334	2.1046 RF power output:n77_40MHz_30kHz_633334;33;CP-OFDM QPSK_Inner_Full;PC3	22.27	23.16
NR	n77	633334	2.1046 RF power output:n77_40MHz_30kHz_633334;34;CP-OFDM QPSK_Edge_1RB_Left;PC3	21.75	22.64
NR	n77	633334	2.1046 RF power output:n77_40MHz_30kHz_633334;35;CP-OFDM QPSK_Edge_1RB_Right;PC3	21.77	22.66
NR	n77	633334	2.1046 RF power output:n77_40MHz_30kHz_633334;36;CP-OFDM QPSK_Outer_Full;PC3	22.52	23.41
NR	n77	633334	2.1046 RF power output:n77_40MHz_30kHz_633334;37;CP-OFDM 16QAM_Inner_1RB_Left;PC3	22.08	22.97
NR	n77	633334	2.1046 RF power output:n77_40MHz_30kHz_633334;38;CP-OFDM 16QAM_Inner_1RB_Right;PC3	22.27	23.16
NR	n77	633334	2.1046 RF power output:n77_40MHz_30kHz_633334;39;CP-OFDM 16QAM_Inner_Full;PC3	22.22	23.11
NR	n77	633334	2.1046 RF power output:n77_40MHz_30kHz_633334;40;CP-OFDM 16QAM_Edge_1RB_Left;PC3	21.99	22.88
NR	n77	633334	2.1046 RF power output:n77_40MHz_30kHz_633334;41;CP-OFDM 16QAM_Edge_1RB_Right;PC3	22.01	22.9
NR	n77	633334	2.1046 RF power output:n77_40MHz_30kHz_633334;42;CP-OFDM 16QAM_Outer_Full;PC3	22.5	23.39
NR	n77	633334	2.1046 RF power output:n77_40MHz_30kHz_633334;43;CP-OFDM 64QAM_Inner_1RB_Left;PC3	21.51	22.4
NR	n77	633334	2.1046 RF power output:n77_40MHz_30kHz_633334;44;CP-OFDM 64QAM_Inner_1RB_Right;PC3	21.91	22.8
NR	n77	633334	2.1046 RF power output:n77_40MHz_30kHz_633334;45;CP-OFDM 64QAM_Inner_Full;PC3	22.25	23.14
NR	n77	633334	2.1046 RF power output:n77_40MHz_30kHz_633334;46;CP-OFDM 64QAM_Edge_1RB_Left;PC3	20.92	21.81
NR	n77	633334	2.1046 RF power output:n77_40MHz_30kHz_633334;47;CP-OFDM 64QAM_Edge_1RB_Right;PC3	21.26	22.15
NR	n77	633334	2.1046 RF power output:n77_40MHz_30kHz_633334;48;CP-OFDM 64QAM_Outer_Full;PC3	21.12	22.01
NR	n77	633334	2.1046 RF power output:n77_40MHz_30kHz_633334;49;CP-OFDM 256QAM_Inner_1RB_Left;PC3	19.82	20.71
NR	n77	633334	2.1046 RF power output:n77_40MHz_30kHz_633334;50;CP-OFDM 256QAM_Inner_1RB_Right;PC3	19.86	20.75
NR	n77	633334	2.1046 RF power output:n77_40MHz_30kHz_633334;51;CP-OFDM 256QAM_Inner_Full;PC3	19.89	20.78
NR	n77	633334	2.1046 RF power output:n77_40MHz_30kHz_633334;52;CP-OFDM 256QAM_Edge_1RB_Left;PC3	19.44	20.33
NR	n77	633334	2.1046 RF power output:n77_40MHz_30kHz_633334;53;CP-OFDM 256QAM_Edge_1RB_Right;PC3	19.42	20.31
NR	n77	633334	2.1046 RF power output:n77_40MHz_30kHz_633334;54;CP-OFDM 256QAM_Outer_Full;PC3	19.03	19.92
NR	n77	635332	2.1046 RF power output:n77_40MHz_30kHz_635332;1;DFT-s-OFDM PI/2 BPSK_Inner_1RB_Left;PC3	22.03	22.92
NR	n77	635332	2.1046 RF power output:n77_40MHz_30kHz_635332;2;DFT-s-OFDM PI/2 BPSK_Inner_1RB_Right;PC3	21.8	22.69
NR	n77	635332	2.1046 RF power output:n77_40MHz_30kHz_635332;3;DFT-s-OFDM PI/2 BPSK_Inner_Full;PC3	22.26	23.15
NR	n77	635332	2.1046 RF power output:n77_40MHz_30kHz_635332;4;DFT-s-OFDM PI/2 BPSK_Edge_1RB_Left;PC3	21.74	22.63
NR	n77	635332	2.1046 RF power output:n77_40MHz_30kHz_635332;5;DFT-s-OFDM PI/2 BPSK_Edge_1RB_Right;PC3	21.51	22.4
NR	n77	635332	2.1046 RF power output:n77_40MHz_30kHz_635332;6;DFT-s-OFDM PI/2 BPSK_Outer_Full;PC3	22.6	23.49
NR	n77	635332	2.1046 RF power output:n77_40MHz_30kHz_635332;7;DFT-s-OFDM QPSK_Inner_1RB_Left;PC3	22.06	22.95
NR	n77	635332	2.1046 RF power output:n77_40MHz_30kHz_635332;8;DFT-s-OFDM QPSK_Inner_1RB_Right;PC3	21.85	22.74
NR	n77	635332	2.1046 RF power output:n77_40MHz_30kHz_635332;9;DFT-s-OFDM QPSK_Inner_Full;PC3	22.25	23.14
NR	n77	635332	2.1046 RF power output:n77_40MHz_30kHz_635332;10;DFT-s-OFDM QPSK_Edge_1RB_Left;PC3	21.75	22.64
NR	n77	635332	2.1046 RF power output:n77_40MHz_30kHz_635332;11;DFT-s-OFDM QPSK_Edge_1RB_Right;PC3	21.56	22.45
NR	n77	635332	2.1046 RF power output:n77_40MHz_30kHz_635332;12;DFT-s-OFDM QPSK_Outer_Full;PC3	22.61	23.5
NR	n77	635332	2.1046 RF power output:n77_40MHz_30kHz_635332;13;DFT-s-OFDM 16QAM_Inner_1RB_Left;PC3	22.11	23
NR	n77	635332	2.1046 RF power output:n77_40MHz_30kHz_635332;14;DFT-s-OFDM 16QAM_Inner_1RB_Right;PC3	21.91	22.8
NR	n77	635332	2.1046 RF power output:n77_40MHz_30kHz_635332;15;DFT-s-OFDM 16QAM_Inner_Full;PC3	22.25	23.14
NR	n77	635332	2.1046 RF power output:n77_40MHz_30kHz_635332;16;DFT-s-OFDM 16QAM_Edge_1RB_Left;PC3	21.84	22.73
NR	n77	635332	2.1046 RF power output:n77_40MHz_30kHz_635332;17;DFT-s-OFDM 16QAM_Edge_1RB_Right;PC3	21.63	22.52
NR	n77	635332	2.1046 RF power output:n77_40MHz_30kHz_635332;18;DFT-s-OFDM 16QAM_Outer_Full;PC3	22.59	23.48
NR	n77	635332	2.1046 RF power output:n77_40MHz_30kHz_635332;19;DFT-s-OFDM 64QAM_Inner_1RB_Left;PC3	21.7	22.59
NR	n77	635332	2.1046 RF power output:n77_40MHz_30kHz_635332;20;DFT-s-OFDM 64QAM_Inner_1RB_Right;PC3	21.96	22.85
NR	n77	635332	2.1046 RF power output:n77_40MHz_30kHz_635332;21;DFT-s-OFDM 64QAM_Inner_Full;PC3	22.29	23.18
NR	n77	635332	2.1046 RF power output:n77_40MHz_30kHz_635332;22;DFT-s-OFDM 64QAM_Edge_1RB_Left;PC3	21.47	22.36
NR	n77	635332	2.1046 RF power output:n77_40MHz_30kHz_635332;23;DFT-s-OFDM 64QAM_Edge_1RB_Right;PC3	21.38	22.27
NR	n77	635332	2.1046 RF power output:n77_40MHz_30kHz_635332;24;DFT-s-OFDM 64QAM_Outer_Full;PC3	22.33	23.22
NR	n77	635332	2.1046 RF power output:n77_40MHz_30kHz_635332;25;DFT-s-OFDM 256QAM_Inner_1RB_Left;PC3	21.7	22.59
NR	n77	635332	2.1046 RF power output:n77_40MHz_30kHz_635332;26;DFT-s-OFDM 256QAM_Inner_1RB_Right;PC3	21.51	22.4
NR	n77	635332	2.1046 RF power output:n77_40MHz_30kHz_635332;27;DFT-s-OFDM 256QAM_Inner_Full;PC3	21.62	22.51
NR	n77	635332	2.1046 RF power output:n77_40MHz_30kHz_635332;28;DFT-s-OFDM 256QAM_Edge_1RB_Left;PC3	21.35	22.24
NR	n77	635332	2.1046 RF power output:n77_40MHz_30kHz_635332;29;DFT-s-OFDM 256QAM_Edge_1RB_Right;PC3	21.08	21.97
NR	n77	635332	2.1046 RF power output:n77_40MHz_30kHz_635332;30;DFT-s-OFDM 256QAM_Outer_Full;PC3	20.96	21.85
NR	n77	635332	2.1046 RF power output:n77_40MHz_30kHz_635332;31;CP-OFDM QPSK_Inner_1RB_Left;PC3	22.15	23.04
NR	n77	635332	2.1046 RF power output:n77_40MHz_30kHz_635332;32;CP-OFDM QPSK_Inner_1RB_Right;PC3	21.9	22.79
NR	n77	635332	2.1046 RF power output:n77_40MHz_30kHz_635332;33;CP-OFDM QPSK_Inner_Full;PC3	22.33	23.22
NR	n77	635332	2.1046 RF power output:n77_40MHz_30kHz_635332;34;CP-OFDM QPSK_Edge_1RB_Left;PC3	21.8	22.69
NR	n77	635332	2.1046 RF power output:n77_40MHz_30kHz_635332;35;CP-OFDM QPSK_Edge_1RB_Right;PC3	21.58	22.47
NR	n77	635332	2.1046 RF power output:n77_40MHz_30kHz_635332;36;CP-OFDM QPSK_Outer_Full;PC3	22.6	23.49
NR	n77	635332	2.1046 RF power output:n77_40MHz_30kHz_635332;37;CP-OFDM 16QAM_Inner_1RB_Left;PC3	22.16	23.05
NR	n77	635332	2.1046 RF power output:n77_40MHz_30kHz_635332;38;CP-OFDM 16QAM_Inner_1RB_Right;PC3	21.97	22.86
NR	n77	635332	2.1046 RF power output:n77_40MHz_30kHz_635332;39;CP-OFDM 16QAM_Inner_Full;PC3	22.26	23.15
NR	n77	635332	2.1046 RF power output:n77_40MHz_30kHz_635332;40;CP-OFDM 16QAM_Edge_1RB_Left;PC3	21.91	22.8
NR	n77	635332	2.1046 RF power output:n77_40MHz_30kHz_635332;41;CP-OFDM 16QAM_Edge_1RB_Right;PC3	21.69	22.58
NR	n77	635332	2.1046 RF power output:n77_40MHz_30kHz_635332;42;CP-OFDM 16QAM_Outer_Full;PC3	22.6	23.49
NR	n77	635332	2.1046 RF power output:n77_40MHz_30kHz_635332;43;CP-OFDM 64QAM_Inner_1RB_Left;PC3	22.02	22.91
NR	n77	635332	2.1046 RF power output:n77_40MHz_30kHz_635332;44;CP-OFDM 64QAM_Inner_1RB_Right;PC3	21.88	22.77
NR	n77	635332	2.1046 RF power output:n77_40MHz_30kHz_635332;45;CP-OFDM 64QAM_Inner_Full;PC3	22.28	23.17
NR	n77	635332	2.1046 RF power output:n77_40MHz_30kHz_635332;46;CP-OFDM 64QAM_Edge_1RB_Left;PC3	21.52	22.41
NR	n77	635332	2.1046 RF power output:n77_40MHz_30kHz_635332;47;CP-OFDM 64QAM_Edge_1RB_Right;PC3	20.87	21.76
NR	n77	635332	2.1046 RF power output:n77_40MHz_30kHz_635332;48;CP-OFDM 64QAM_Outer_Full;PC3	21.05	21.94
NR	n77	635332	2.1046 RF power output:n77_40MHz_30kHz_635332;49;CP-OFDM 256QAM_Inner_1RB_Left;PC3	19.56	20.45
NR	n77	635332	2.1046 RF power output:n77_40MHz_30kHz_635332;50;CP-OFDM 256QAM_Inner_1RB_Right;PC3	19.34	20.23
NR	n77	635332	2.1046 RF power output:n77_40MHz_30kHz_635332;51;CP-OFDM 256QAM_Inner_Full;PC3	19.57	20.46
NR	n77	635332	2.1046 RF power output:n77_40MHz_30kHz_635332;52;CP-OFDM 256QAM_Edge_1RB_Left;PC3	19.18	20.07
NR	n77	635332	2.1046 RF power output:n77_40MHz_30kHz_635332;53;CP-OFDM 256QAM_Edge_1RB_Right;PC3	18.98	19.87
NR	n77	635332	2.1046 RF power output:n77_40MHz_30kHz_635332;54;CP-OFDM 256QAM_Outer_Full;PC3	18.74	19.63

System	Band	Channel	TestItem	Measured Value	EIRP
NR	n77	631668	2.1046 RF power output:n77_50MHz_30kHz_631668;1;DFT-s-OFDM PI/2 BPSK_Inner_1RB_Left;PC3	20.47	21.36
NR	n77	631668	2.1046 RF power output:n77_50MHz_30kHz_631668;2;DFT-s-OFDM PI/2 BPSK_Inner_1RB_Right;PC3	20.8	21.69
NR	n77	631668	2.1046 RF power output:n77_50MHz_30kHz_631668;3;DFT-s-OFDM PI/2 BPSK_Inner_Full;PC3	21.85	22.74
NR	n77	631668	2.1046 RF power output:n77_50MHz_30kHz_631668;4;DFT-s-OFDM PI/2 BPSK_Edge_1RB_Left;PC3	20.24	21.13
NR	n77	631668	2.1046 RF power output:n77_50MHz_30kHz_631668;5;DFT-s-OFDM PI/2 BPSK_Edge_1RB_Right;PC3	20.55	21.44
NR	n77	631668	2.1046 RF power output:n77_50MHz_30kHz_631668;6;DFT-s-OFDM PI/2 BPSK_Outer_Full;PC3	21.77	22.66
NR	n77	631668	2.1046 RF power output:n77_50MHz_30kHz_631668;7;DFT-s-OFDM QPSK_Inner_1RB_Left;PC3	20.57	21.46
NR	n77	631668	2.1046 RF power output:n77_50MHz_30kHz_631668;8;DFT-s-OFDM QPSK_Inner_1RB_Right;PC3	20.91	21.8
NR	n77	631668	2.1046 RF power output:n77_50MHz_30kHz_631668;9;DFT-s-OFDM QPSK_Inner_Full;PC3	21.82	22.71
NR	n77	631668	2.1046 RF power output:n77_50MHz_30kHz_631668;10;DFT-s-OFDM QPSK_Edge_1RB_Left;PC3	20.42	21.31
NR	n77	631668	2.1046 RF power output:n77_50MHz_30kHz_631668;11;DFT-s-OFDM QPSK_Edge_1RB_Right;PC3	20.73	21.62
NR	n77	631668	2.1046 RF power output:n77_50MHz_30kHz_631668;12;DFT-s-OFDM QPSK_Outer_Full;PC3	21.73	22.62
NR	n77	631668	2.1046 RF power output:n77_50MHz_30kHz_631668;13;DFT-s-OFDM 16QAM_Inner_1RB_Left;PC3	20.66	21.55
NR	n77	631668	2.1046 RF power output:n77_50MHz_30kHz_631668;14;DFT-s-OFDM 16QAM_Inner_1RB_Right;PC3	21.03	21.92
NR	n77	631668	2.1046 RF power output:n77_50MHz_30kHz_631668;15;DFT-s-OFDM 16QAM_Inner_Full;PC3	21.85	22.74
NR	n77	631668	2.1046 RF power output:n77_50MHz_30kHz_631668;16;DFT-s-OFDM 16QAM_Edge_1RB_Left;PC3	20.17	21.06
NR	n77	631668	2.1046 RF power output:n77_50MHz_30kHz_631668;17;DFT-s-OFDM 16QAM_Edge_1RB_Right;PC3	20.56	21.45
NR	n77	631668	2.1046 RF power output:n77_50MHz_30kHz_631668;18;DFT-s-OFDM 16QAM_Outer_Full;PC3	21.79	22.68
NR	n77	631668	2.1046 RF power output:n77_50MHz_30kHz_631668;19;DFT-s-OFDM 64QAM_Inner_1RB_Left;PC3	20.38	21.27
NR	n77	631668	2.1046 RF power output:n77_50MHz_30kHz_631668;20;DFT-s-OFDM 64QAM_Inner_1RB_Right;PC3	20.75	21.64
NR	n77	631668	2.1046 RF power output:n77_50MHz_30kHz_631668;21;DFT-s-OFDM 64QAM_Inner_Full;PC3	21.84	22.73
NR	n77	631668	2.1046 RF power output:n77_50MHz_30kHz_631668;22;DFT-s-OFDM 64QAM_Edge_1RB_Left;PC3	20.1	20.99
NR	n77	631668	2.1046 RF power output:n77_50MHz_30kHz_631668;23;DFT-s-OFDM 64QAM_Edge_1RB_Right;PC3	20.54	21.43
NR	n77	631668	2.1046 RF power output:n77_50MHz_30kHz_631668;24;DFT-s-OFDM 64QAM_Outer_Full;PC3	21.51	22.4
NR	n77	631668	2.1046 RF power output:n77_50MHz_30kHz_631668;25;DFT-s-OFDM 256QAM_Inner_1RB_Left;PC3	20.4	21.29
NR	n77	631668	2.1046 RF power output:n77_50MHz_30kHz_631668;26;DFT-s-OFDM 256QAM_Inner_1RB_Right;PC3	20.73	21.62
NR	n77	631668	2.1046 RF power output:n77_50MHz_30kHz_631668;27;DFT-s-OFDM 256QAM_Inner_Full;PC3	21.45	22.34
NR	n77	631668	2.1046 RF power output:n77_50MHz_30kHz_631668;28;DFT-s-OFDM 256QAM_Edge_1RB_Left;PC3	20.08	20.97
NR	n77	631668	2.1046 RF power output:n77_50MHz_30kHz_631668;29;DFT-s-OFDM 256QAM_Edge_1RB_Right;PC3	20.43	21.32
NR	n77	631668	2.1046 RF power output:n77_50MHz_30kHz_631668;30;DFT-s-OFDM 256QAM_Outer_Full;PC3	20.31	21.2
NR	n77	631668	2.1046 RF power output:n77_50MHz_30kHz_631668;31;CP-OFDM QPSK_Inner_1RB_Left;PC3	20.67	21.56
NR	n77	631668	2.1046 RF power output:n77_50MHz_30kHz_631668;32;CP-OFDM QPSK_Inner_1RB_Right;PC3	21.06	21.95
NR	n77	631668	2.1046 RF power output:n77_50MHz_30kHz_631668;33;CP-OFDM QPSK_Inner_Full;PC3	21.82	22.71
NR	n77	631668	2.1046 RF power output:n77_50MHz_30kHz_631668;34;CP-OFDM QPSK_Edge_1RB_Left;PC3	20.41	21.3
NR	n77	631668	2.1046 RF power output:n77_50MHz_30kHz_631668;35;CP-OFDM QPSK_Edge_1RB_Right;PC3	20.77	21.66
NR	n77	631668	2.1046 RF power output:n77_50MHz_30kHz_631668;36;CP-OFDM QPSK_Outer_Full;PC3	21.7	22.59
NR	n77	631668	2.1046 RF power output:n77_50MHz_30kHz_631668;37;CP-OFDM 16QAM_Inner_1RB_Left;PC3	20.66	21.55
NR	n77	631668	2.1046 RF power output:n77_50MHz_30kHz_631668;38;CP-OFDM 16QAM_Inner_1RB_Right;PC3	21.06	21.95
NR	n77	631668	2.1046 RF power output:n77_50MHz_30kHz_631668;39;CP-OFDM 16QAM_Inner_Full;PC3	21.8	22.69
NR	n77	631668	2.1046 RF power output:n77_50MHz_30kHz_631668;40;CP-OFDM 16QAM_Edge_1RB_Left;PC3	20.51	21.4
NR	n77	631668	2.1046 RF power output:n77_50MHz_30kHz_631668;41;CP-OFDM 16QAM_Edge_1RB_Right;PC3	21.03	21.92
NR	n77	631668	2.1046 RF power output:n77_50MHz_30kHz_631668;42;CP-OFDM 16QAM_Outer_Full;PC3	21.71	22.6
NR	n77	631668	2.1046 RF power output:n77_50MHz_30kHz_631668;43;CP-OFDM 64QAM_Inner_1RB_Left;PC3	20.15	21.04
NR	n77	631668	2.1046 RF power output:n77_50MHz_30kHz_631668;44;CP-OFDM 64QAM_Inner_1RB_Right;PC3	20.88	21.77
NR	n77	631668	2.1046 RF power output:n77_50MHz_30kHz_631668;45;CP-OFDM 64QAM_Inner_Full;PC3	21.81	22.7
NR	n77	631668	2.1046 RF power output:n77_50MHz_30kHz_631668;46;CP-OFDM 64QAM_Edge_1RB_Left;PC3	20.02	20.91
NR	n77	631668	2.1046 RF power output:n77_50MHz_30kHz_631668;47;CP-OFDM 64QAM_Edge_1RB_Right;PC3	19.93	20.82
NR	n77	631668	2.1046 RF power output:n77_50MHz_30kHz_631668;48;CP-OFDM 64QAM_Outer_Full;PC3	20.24	21.13
NR	n77	631668	2.1046 RF power output:n77_50MHz_30kHz_631668;49;CP-OFDM 256QAM_Inner_1RB_Left;PC3	18.34	19.23
NR	n77	631668	2.1046 RF power output:n77_50MHz_30kHz_631668;50;CP-OFDM 256QAM_Inner_1RB_Right;PC3	18.64	19.53
NR	n77	631668	2.1046 RF power output:n77_50MHz_30kHz_631668;51;CP-OFDM 256QAM_Inner_Full;PC3	19.29	20.18
NR	n77	631668	2.1046 RF power output:n77_50MHz_30kHz_631668;52;CP-OFDM 256QAM_Edge_1RB_Left;PC3	17.95	18.84
NR	n77	631668	2.1046 RF power output:n77_50MHz_30kHz_631668;53;CP-OFDM 256QAM_Edge_1RB_Right;PC3	18.29	19.18
NR	n77	631668	2.1046 RF power output:n77_50MHz_30kHz_631668;54;CP-OFDM 256QAM_Outer_Full;PC3	18.22	19.11
NR	n77	633334	2.1046 RF power output:n77_50MHz_30kHz_633334;1;DFT-s-OFDM PI/2 BPSK_Inner_1RB_Left;PC3	20.9	21.79
NR	n77	633334	2.1046 RF power output:n77_50MHz_30kHz_633334;2;DFT-s-OFDM PI/2 BPSK_Inner_1RB_Right;PC3	20.76	21.65
NR	n77	633334	2.1046 RF power output:n77_50MHz_30kHz_633334;3;DFT-s-OFDM PI/2 BPSK_Inner_Full;PC3	21.88	22.77
NR	n77	633334	2.1046 RF power output:n77_50MHz_30kHz_633334;4;DFT-s-OFDM PI/2 BPSK_Edge_1RB_Left;PC3	20.69	21.58
NR	n77	633334	2.1046 RF power output:n77_50MHz_30kHz_633334;5;DFT-s-OFDM PI/2 BPSK_Edge_1RB_Right;PC3	20.56	21.45
NR	n77	633334	2.1046 RF power output:n77_50MHz_30kHz_633334;6;DFT-s-OFDM PI/2 BPSK_Outer_Full;PC3	21.83	22.72
NR	n77	633334	2.1046 RF power output:n77_50MHz_30kHz_633334;7;DFT-s-OFDM QPSK_Inner_1RB_Left;PC3	20.89	21.78
NR	n77	633334	2.1046 RF power output:n77_50MHz_30kHz_633334;8;DFT-s-OFDM QPSK_Inner_1RB_Right;PC3	20.79	21.68
NR	n77	633334	2.1046 RF power output:n77_50MHz_30kHz_633334;9;DFT-s-OFDM QPSK_Inner_Full;PC3	21.9	22.79
NR	n77	633334	2.1046 RF power output:n77_50MHz_30kHz_633334;10;DFT-s-OFDM QPSK_Edge_1RB_Left;PC3	20.73	21.62
NR	n77	633334	2.1046 RF power output:n77_50MHz_30kHz_633334;11;DFT-s-OFDM QPSK_Edge_1RB_Right;PC3	20.59	21.48
NR	n77	633334	2.1046 RF power output:n77_50MHz_30kHz_633334;12;DFT-s-OFDM QPSK_Outer_Full;PC3	21.83	22.72
NR	n77	633334	2.1046 RF power output:n77_50MHz_30kHz_633334;13;DFT-s-OFDM 16QAM_Inner_1RB_Left;PC3	21.01	21.9
NR	n77	633334	2.1046 RF power output:n77_50MHz_30kHz_633334;14;DFT-s-OFDM 16QAM_Inner_1RB_Right;PC3	20.84	21.73
NR	n77	633334	2.1046 RF power output:n77_50MHz_30kHz_633334;15;DFT-s-OFDM 16QAM_Inner_Full;PC3	21.92	22.81
NR	n77	633334	2.1046 RF power output:n77_50MHz_30kHz_633334;16;DFT-s-OFDM 16QAM_Edge_1RB_Left;PC3	20.83	21.72
NR	n77	633334	2.1046 RF power output:n77_50MHz_30kHz_633334;17;DFT-s-OFDM 16QAM_Edge_1RB_Right;PC3	20.71	21.6
NR	n77	633334	2.1046 RF power output:n77_50MHz_30kHz_633334;18;DFT-s-OFDM 16QAM_Outer_Full;PC3	21.89	22.78
NR	n77	633334	2.1046 RF power output:n77_50MHz_30kHz_633334;19;DFT-s-OFDM 64QAM_Inner_1RB_Left;PC3	20.34	21.23
NR	n77	633334	2.1046 RF power output:n77_50MHz_30kHz_633334;20;DFT-s-OFDM 64QAM_Inner_1RB_Right;PC3	20.7	21.59
NR	n77	633334	2.1046 RF power output:n77_50MHz_30kHz_633334;21;DFT-s-OFDM 64QAM_Inner_Full;PC3	21.93	22.82
NR	n77	633334	2.1046 RF power output:n77_50MHz_30kHz_633334;22;DFT-s-OFDM 64QAM_Edge_1RB_Left;PC3	20.53	21.42
NR	n77	633334	2.1046 RF power output:n77_50MHz_30kHz_633334;23;DFT-s-OFDM 64QAM_Edge_1RB_Right;PC3	20.03	20.92
NR	n77	633334	2.1046 RF power output:n77_50MHz_30kHz_633334;24;DFT-s-OFDM 64QAM_Outer_Full;PC3	21.63	22.52
NR	n77	633334	2.1046 RF power output:n77_50MHz_30kHz_633334;25;DFT-s-OFDM 256QAM_Inner_1RB_Left;PC3	20.54	21.43
NR	n77	633334	2.1046 RF power output:n77_50MHz_30kHz_633334;26;DFT-s-OFDM 256QAM_Inner_1RB_Right;PC3	20.51	21.4
NR	n77	633334	2.1046 RF power output:n77_50MHz_30kHz_633334;27;DFT-s-OFDM 256QAM_Inner_Full;PC3	21.42	22.31

System	Band	Channel	TestItem	Measured Value	EIRP
NR	n77	633334	2.1046 RF power output:n77_50MHz_30kHz_633334;28;DFT-s-OFDM 256QAM_Edge_1RB_Left;PC3	20.14	21.03
NR	n77	633334	2.1046 RF power output:n77_50MHz_30kHz_633334;29;DFT-s-OFDM 256QAM_Edge_1RB_Right;PC3	19.95	20.84
NR	n77	633334	2.1046 RF power output:n77_50MHz_30kHz_633334;30;DFT-s-OFDM 256QAM_Outer_Full;PC3	20.26	21.15
NR	n77	633334	2.1046 RF power output:n77_50MHz_30kHz_633334;31;CP-OFDM QPSK_Inner_1RB_Left;PC3	20.91	21.8
NR	n77	633334	2.1046 RF power output:n77_50MHz_30kHz_633334;32;CP-OFDM QPSK_Inner_1RB_Right;PC3	20.81	21.7
NR	n77	633334	2.1046 RF power output:n77_50MHz_30kHz_633334;33;CP-OFDM QPSK_Inner_Full;PC3	21.86	22.75
NR	n77	633334	2.1046 RF power output:n77_50MHz_30kHz_633334;34;CP-OFDM QPSK_Edge_1RB_Left;PC3	20.72	21.61
NR	n77	633334	2.1046 RF power output:n77_50MHz_30kHz_633334;35;CP-OFDM QPSK_Edge_1RB_Right;PC3	20.61	21.5
NR	n77	633334	2.1046 RF power output:n77_50MHz_30kHz_633334;36;CP-OFDM QPSK_Outer_Full;PC3	21.77	22.66
NR	n77	633334	2.1046 RF power output:n77_50MHz_30kHz_633334;37;CP-OFDM 16QAM_Inner_1RB_Left;PC3	21.01	21.9
NR	n77	633334	2.1046 RF power output:n77_50MHz_30kHz_633334;38;CP-OFDM 16QAM_Inner_1RB_Right;PC3	21.06	21.95
NR	n77	633334	2.1046 RF power output:n77_50MHz_30kHz_633334;39;CP-OFDM 16QAM_Inner_Full;PC3	21.85	22.74
NR	n77	633334	2.1046 RF power output:n77_50MHz_30kHz_633334;40;CP-OFDM 16QAM_Edge_1RB_Left;PC3	20.83	21.72
NR	n77	633334	2.1046 RF power output:n77_50MHz_30kHz_633334;41;CP-OFDM 16QAM_Edge_1RB_Right;PC3	20.71	21.6
NR	n77	633334	2.1046 RF power output:n77_50MHz_30kHz_633334;42;CP-OFDM 16QAM_Outer_Full;PC3	21.75	22.64
NR	n77	633334	2.1046 RF power output:n77_50MHz_30kHz_633334;43;CP-OFDM 64QAM_Inner_1RB_Left;PC3	20.43	21.32
NR	n77	633334	2.1046 RF power output:n77_50MHz_30kHz_633334;44;CP-OFDM 64QAM_Inner_1RB_Right;PC3	20.71	21.6
NR	n77	633334	2.1046 RF power output:n77_50MHz_30kHz_633334;45;CP-OFDM 64QAM_Inner_Full;PC3	21.84	22.73
NR	n77	633334	2.1046 RF power output:n77_50MHz_30kHz_633334;46;CP-OFDM 64QAM_Edge_1RB_Left;PC3	20.22	21.11
NR	n77	633334	2.1046 RF power output:n77_50MHz_30kHz_633334;47;CP-OFDM 64QAM_Edge_1RB_Right;PC3	20.07	20.96
NR	n77	633334	2.1046 RF power output:n77_50MHz_30kHz_633334;48;CP-OFDM 64QAM_Outer_Full;PC3	20.34	21.23
NR	n77	633334	2.1046 RF power output:n77_50MHz_30kHz_633334;49;CP-OFDM 256QAM_Inner_1RB_Left;PC3	18.47	19.36
NR	n77	633334	2.1046 RF power output:n77_50MHz_30kHz_633334;50;CP-OFDM 256QAM_Inner_1RB_Right;PC3	18.3	19.19
NR	n77	633334	2.1046 RF power output:n77_50MHz_30kHz_633334;51;CP-OFDM 256QAM_Inner_Full;PC3	19.35	20.24
NR	n77	633334	2.1046 RF power output:n77_50MHz_30kHz_633334;52;CP-OFDM 256QAM_Edge_1RB_Left;PC3	18.28	19.17
NR	n77	633334	2.1046 RF power output:n77_50MHz_30kHz_633334;53;CP-OFDM 256QAM_Edge_1RB_Right;PC3	18.12	19.01
NR	n77	633334	2.1046 RF power output:n77_50MHz_30kHz_633334;54;CP-OFDM 256QAM_Outer_Full;PC3	18.24	19.13
NR	n77	635000	2.1046 RF power output:n77_50MHz_30kHz_635000;1;DFT-s-OFDM PI/2 BPSK_Inner_1RB_Left;PC3	20.65	21.54
NR	n77	635000	2.1046 RF power output:n77_50MHz_30kHz_635000;2;DFT-s-OFDM PI/2 BPSK_Inner_1RB_Right;PC3	20.47	21.36
NR	n77	635000	2.1046 RF power output:n77_50MHz_30kHz_635000;3;DFT-s-OFDM PI/2 BPSK_Inner_Full;PC3	21.52	22.41
NR	n77	635000	2.1046 RF power output:n77_50MHz_30kHz_635000;4;DFT-s-OFDM PI/2 BPSK_Edge_1RB_Left;PC3	20.31	21.2
NR	n77	635000	2.1046 RF power output:n77_50MHz_30kHz_635000;5;DFT-s-OFDM PI/2 BPSK_Edge_1RB_Right;PC3	20.09	20.98
NR	n77	635000	2.1046 RF power output:n77_50MHz_30kHz_635000;6;DFT-s-OFDM PI/2 BPSK_Outer_Full;PC3	21.69	22.58
NR	n77	635000	2.1046 RF power output:n77_50MHz_30kHz_635000;7;DFT-s-OFDM QPSK_Inner_1RB_Left;PC3	20.68	21.57
NR	n77	635000	2.1046 RF power output:n77_50MHz_30kHz_635000;8;DFT-s-OFDM QPSK_Inner_1RB_Right;PC3	20.46	21.35
NR	n77	635000	2.1046 RF power output:n77_50MHz_30kHz_635000;9;DFT-s-OFDM QPSK_Inner_Full;PC3	21.52	22.41
NR	n77	635000	2.1046 RF power output:n77_50MHz_30kHz_635000;10;DFT-s-OFDM QPSK_Edge_1RB_Left;PC3	20.44	21.33
NR	n77	635000	2.1046 RF power output:n77_50MHz_30kHz_635000;11;DFT-s-OFDM QPSK_Edge_1RB_Right;PC3	20.25	21.14
NR	n77	635000	2.1046 RF power output:n77_50MHz_30kHz_635000;12;DFT-s-OFDM QPSK_Outer_Full;PC3	21.65	22.54
NR	n77	635000	2.1046 RF power output:n77_50MHz_30kHz_635000;13;DFT-s-OFDM 16QAM_Inner_1RB_Left;PC3	20.68	21.57
NR	n77	635000	2.1046 RF power output:n77_50MHz_30kHz_635000;14;DFT-s-OFDM 16QAM_Inner_1RB_Right;PC3	20.64	21.53
NR	n77	635000	2.1046 RF power output:n77_50MHz_30kHz_635000;15;DFT-s-OFDM 16QAM_Inner_Full;PC3	21.71	22.6
NR	n77	635000	2.1046 RF power output:n77_50MHz_30kHz_635000;16;DFT-s-OFDM 16QAM_Edge_1RB_Left;PC3	20.59	21.48
NR	n77	635000	2.1046 RF power output:n77_50MHz_30kHz_635000;17;DFT-s-OFDM 16QAM_Edge_1RB_Right;PC3	20.39	21.28
NR	n77	635000	2.1046 RF power output:n77_50MHz_30kHz_635000;18;DFT-s-OFDM 16QAM_Outer_Full;PC3	21.71	22.6
NR	n77	635000	2.1046 RF power output:n77_50MHz_30kHz_635000;19;DFT-s-OFDM 64QAM_Inner_1RB_Left;PC3	20.17	21.06
NR	n77	635000	2.1046 RF power output:n77_50MHz_30kHz_635000;20;DFT-s-OFDM 64QAM_Inner_1RB_Right;PC3	20.54	21.43
NR	n77	635000	2.1046 RF power output:n77_50MHz_30kHz_635000;21;DFT-s-OFDM 64QAM_Inner_Full;PC3	21.68	22.57
NR	n77	635000	2.1046 RF power output:n77_50MHz_30kHz_635000;22;DFT-s-OFDM 64QAM_Edge_1RB_Left;PC3	20.5	21.39
NR	n77	635000	2.1046 RF power output:n77_50MHz_30kHz_635000;23;DFT-s-OFDM 64QAM_Edge_1RB_Right;PC3	20.32	21.21
NR	n77	635000	2.1046 RF power output:n77_50MHz_30kHz_635000;24;DFT-s-OFDM 64QAM_Outer_Full;PC3	21.5	22.39
NR	n77	635000	2.1046 RF power output:n77_50MHz_30kHz_635000;25;DFT-s-OFDM 256QAM_Inner_1RB_Left;PC3	20.29	21.18
NR	n77	635000	2.1046 RF power output:n77_50MHz_30kHz_635000;26;DFT-s-OFDM 256QAM_Inner_1RB_Right;PC3	20.2	21.09
NR	n77	635000	2.1046 RF power output:n77_50MHz_30kHz_635000;27;DFT-s-OFDM 256QAM_Inner_Full;PC3	21.13	22.02
NR	n77	635000	2.1046 RF power output:n77_50MHz_30kHz_635000;28;DFT-s-OFDM 256QAM_Edge_1RB_Left;PC3	19.92	20.81
NR	n77	635000	2.1046 RF power output:n77_50MHz_30kHz_635000;29;DFT-s-OFDM 256QAM_Edge_1RB_Right;PC3	19.91	20.8
NR	n77	635000	2.1046 RF power output:n77_50MHz_30kHz_635000;30;DFT-s-OFDM 256QAM_Outer_Full;PC3	20.12	21.01
NR	n77	635000	2.1046 RF power output:n77_50MHz_30kHz_635000;31;CP-OFDM QPSK_Inner_1RB_Left;PC3	20.76	21.65
NR	n77	635000	2.1046 RF power output:n77_50MHz_30kHz_635000;32;CP-OFDM QPSK_Inner_1RB_Right;PC3	20.61	21.5
NR	n77	635000	2.1046 RF power output:n77_50MHz_30kHz_635000;33;CP-OFDM QPSK_Inner_Full;PC3	21.53	22.42
NR	n77	635000	2.1046 RF power output:n77_50MHz_30kHz_635000;34;CP-OFDM QPSK_Edge_1RB_Left;PC3	20.6	21.49
NR	n77	635000	2.1046 RF power output:n77_50MHz_30kHz_635000;35;CP-OFDM QPSK_Edge_1RB_Right;PC3	20.39	21.28
NR	n77	635000	2.1046 RF power output:n77_50MHz_30kHz_635000;36;CP-OFDM QPSK_Outer_Full;PC3	21.51	22.4
NR	n77	635000	2.1046 RF power output:n77_50MHz_30kHz_635000;37;CP-OFDM 16QAM_Inner_1RB_Left;PC3	20.99	21.88
NR	n77	635000	2.1046 RF power output:n77_50MHz_30kHz_635000;38;CP-OFDM 16QAM_Inner_1RB_Right;PC3	20.67	21.56
NR	n77	635000	2.1046 RF power output:n77_50MHz_30kHz_635000;39;CP-OFDM 16QAM_Inner_Full;PC3	21.53	22.42
NR	n77	635000	2.1046 RF power output:n77_50MHz_30kHz_635000;40;CP-OFDM 16QAM_Edge_1RB_Left;PC3	20.66	21.55
NR	n77	635000	2.1046 RF power output:n77_50MHz_30kHz_635000;41;CP-OFDM 16QAM_Edge_1RB_Right;PC3	20.59	21.48
NR	n77	635000	2.1046 RF power output:n77_50MHz_30kHz_635000;42;CP-OFDM 16QAM_Outer_Full;PC3	21.5	22.39
NR	n77	635000	2.1046 RF power output:n77_50MHz_30kHz_635000;43;CP-OFDM 64QAM_Inner_1RB_Left;PC3	20.72	21.61
NR	n77	635000	2.1046 RF power output:n77_50MHz_30kHz_635000;44;CP-OFDM 64QAM_Inner_1RB_Right;PC3	20.64	21.53
NR	n77	635000	2.1046 RF power output:n77_50MHz_30kHz_635000;45;CP-OFDM 64QAM_Inner_Full;PC3	21.53	22.42
NR	n77	635000	2.1046 RF power output:n77_50MHz_30kHz_635000;46;CP-OFDM 64QAM_Edge_1RB_Left;PC3	19.7	20.59
NR	n77	635000	2.1046 RF power output:n77_50MHz_30kHz_635000;47;CP-OFDM 64QAM_Edge_1RB_Right;PC3	19.93	20.82
NR	n77	635000	2.1046 RF power output:n77_50MHz_30kHz_635000;48;CP-OFDM 64QAM_Outer_Full;PC3	19.93	20.82
NR	n77	635000	2.1046 RF power output:n77_50MHz_30kHz_635000;49;CP-OFDM 256QAM_Inner_1RB_Left;PC3	18.5	19.39
NR	n77	635000	2.1046 RF power output:n77_50MHz_30kHz_635000;50;CP-OFDM 256QAM_Inner_1RB_Right;PC3	18.3	19.19
NR	n77	635000	2.1046 RF power output:n77_50MHz_30kHz_635000;51;CP-OFDM 256QAM_Inner_Full;PC3	19.06	19.95
NR	n77	635000	2.1046 RF power output:n77_50MHz_30kHz_635000;52;CP-OFDM 256QAM_Edge_1RB_Left;PC3	18.13	19.02
NR	n77	635000	2.1046 RF power output:n77_50MHz_30kHz_635000;53;CP-OFDM 256QAM_Edge_1RB_Right;PC3	17.95	18.84
NR	n77	635000	2.1046 RF power output:n77_50MHz_30kHz_635000;54;CP-OFDM 256QAM_Outer_Full;PC3	17.88	18.77

System	Band	Channel	TestItem	Measured Value	EIRP
NR	n77	632000	2.1046 RF power output:n77_60MHz_30kHz_632000;1;DFT-s-OFDM PI/2 BPSK_Inner_1RB_Left;PC3	20.99	21.88
NR	n77	632000	2.1046 RF power output:n77_60MHz_30kHz_632000;2;DFT-s-OFDM PI/2 BPSK_Inner_1RB_Right;PC3	21.34	22.23
NR	n77	632000	2.1046 RF power output:n77_60MHz_30kHz_632000;3;DFT-s-OFDM PI/2 BPSK_Inner_Full;PC3	22.19	23.08
NR	n77	632000	2.1046 RF power output:n77_60MHz_30kHz_632000;4;DFT-s-OFDM PI/2 BPSK_Edge_1RB_Left;PC3	20.84	21.73
NR	n77	632000	2.1046 RF power output:n77_60MHz_30kHz_632000;5;DFT-s-OFDM PI/2 BPSK_Edge_1RB_Right;PC3	21.18	22.07
NR	n77	632000	2.1046 RF power output:n77_60MHz_30kHz_632000;6;DFT-s-OFDM PI/2 BPSK_Outer_Full;PC3	22.16	23.05
NR	n77	632000	2.1046 RF power output:n77_60MHz_30kHz_632000;7;DFT-s-OFDM QPSK_Inner_1RB_Left;PC3	21.25	22.14
NR	n77	632000	2.1046 RF power output:n77_60MHz_30kHz_632000;8;DFT-s-OFDM QPSK_Inner_1RB_Right;PC3	21.6	22.49
NR	n77	632000	2.1046 RF power output:n77_60MHz_30kHz_632000;9;DFT-s-OFDM QPSK_Inner_Full;PC3	22.14	23.03
NR	n77	632000	2.1046 RF power output:n77_60MHz_30kHz_632000;10;DFT-s-OFDM QPSK_Edge_1RB_Left;PC3	21.11	22
NR	n77	632000	2.1046 RF power output:n77_60MHz_30kHz_632000;11;DFT-s-OFDM QPSK_Edge_1RB_Right;PC3	21.45	22.34
NR	n77	632000	2.1046 RF power output:n77_60MHz_30kHz_632000;12;DFT-s-OFDM QPSK_Outer_Full;PC3	22.16	23.05
NR	n77	632000	2.1046 RF power output:n77_60MHz_30kHz_632000;13;DFT-s-OFDM 16QAM_Inner_1RB_Left;PC3	21.18	22.07
NR	n77	632000	2.1046 RF power output:n77_60MHz_30kHz_632000;14;DFT-s-OFDM 16QAM_Inner_1RB_Right;PC3	21.55	22.44
NR	n77	632000	2.1046 RF power output:n77_60MHz_30kHz_632000;15;DFT-s-OFDM 16QAM_Inner_Full;PC3	22.16	23.05
NR	n77	632000	2.1046 RF power output:n77_60MHz_30kHz_632000;16;DFT-s-OFDM 16QAM_Edge_1RB_Left;PC3	21.04	21.93
NR	n77	632000	2.1046 RF power output:n77_60MHz_30kHz_632000;17;DFT-s-OFDM 16QAM_Edge_1RB_Right;PC3	21.44	22.33
NR	n77	632000	2.1046 RF power output:n77_60MHz_30kHz_632000;18;DFT-s-OFDM 16QAM_Outer_Full;PC3	22.16	23.05
NR	n77	632000	2.1046 RF power output:n77_60MHz_30kHz_632000;19;DFT-s-OFDM 64QAM_Inner_1RB_Left;PC3	21.19	22.08
NR	n77	632000	2.1046 RF power output:n77_60MHz_30kHz_632000;20;DFT-s-OFDM 64QAM_Inner_1RB_Right;PC3	21.57	22.46
NR	n77	632000	2.1046 RF power output:n77_60MHz_30kHz_632000;21;DFT-s-OFDM 64QAM_Inner_Full;PC3	22.13	23.02
NR	n77	632000	2.1046 RF power output:n77_60MHz_30kHz_632000;22;DFT-s-OFDM 64QAM_Edge_1RB_Left;PC3	21.05	21.94
NR	n77	632000	2.1046 RF power output:n77_60MHz_30kHz_632000;23;DFT-s-OFDM 64QAM_Edge_1RB_Right;PC3	21.34	22.23
NR	n77	632000	2.1046 RF power output:n77_60MHz_30kHz_632000;24;DFT-s-OFDM 64QAM_Outer_Full;PC3	21.89	22.78
NR	n77	632000	2.1046 RF power output:n77_60MHz_30kHz_632000;25;DFT-s-OFDM 256QAM_Inner_1RB_Left;PC3	20.79	21.68
NR	n77	632000	2.1046 RF power output:n77_60MHz_30kHz_632000;26;DFT-s-OFDM 256QAM_Inner_1RB_Right;PC3	21.13	22.02
NR	n77	632000	2.1046 RF power output:n77_60MHz_30kHz_632000;27;DFT-s-OFDM 256QAM_Inner_Full;PC3	21.76	22.65
NR	n77	632000	2.1046 RF power output:n77_60MHz_30kHz_632000;28;DFT-s-OFDM 256QAM_Edge_1RB_Left;PC3	20.49	21.38
NR	n77	632000	2.1046 RF power output:n77_60MHz_30kHz_632000;29;DFT-s-OFDM 256QAM_Edge_1RB_Right;PC3	20.87	21.76
NR	n77	632000	2.1046 RF power output:n77_60MHz_30kHz_632000;30;DFT-s-OFDM 256QAM_Outer_Full;PC3	20.8	21.69
NR	n77	632000	2.1046 RF power output:n77_60MHz_30kHz_632000;31;CP-OFDM QPSK_Inner_1RB_Left;PC3	21.11	22
NR	n77	632000	2.1046 RF power output:n77_60MHz_30kHz_632000;32;CP-OFDM QPSK_Inner_1RB_Right;PC3	21.49	22.38
NR	n77	632000	2.1046 RF power output:n77_60MHz_30kHz_632000;33;CP-OFDM QPSK_Inner_Full;PC3	21.97	22.86
NR	n77	632000	2.1046 RF power output:n77_60MHz_30kHz_632000;34;CP-OFDM QPSK_Edge_1RB_Left;PC3	20.94	21.83
NR	n77	632000	2.1046 RF power output:n77_60MHz_30kHz_632000;35;CP-OFDM QPSK_Edge_1RB_Right;PC3	21.35	22.24
NR	n77	632000	2.1046 RF power output:n77_60MHz_30kHz_632000;36;CP-OFDM QPSK_Outer_Full;PC3	22	22.89
NR	n77	632000	2.1046 RF power output:n77_60MHz_30kHz_632000;37;CP-OFDM 16QAM_Inner_1RB_Left;PC3	21.22	22.11
NR	n77	632000	2.1046 RF power output:n77_60MHz_30kHz_632000;38;CP-OFDM 16QAM_Inner_1RB_Right;PC3	21.74	22.63
NR	n77	632000	2.1046 RF power output:n77_60MHz_30kHz_632000;39;CP-OFDM 16QAM_Inner_Full;PC3	21.98	22.87
NR	n77	632000	2.1046 RF power output:n77_60MHz_30kHz_632000;40;CP-OFDM 16QAM_Edge_1RB_Left;PC3	21.18	22.07
NR	n77	632000	2.1046 RF power output:n77_60MHz_30kHz_632000;41;CP-OFDM 16QAM_Edge_1RB_Right;PC3	21.59	22.48
NR	n77	632000	2.1046 RF power output:n77_60MHz_30kHz_632000;42;CP-OFDM 16QAM_Outer_Full;PC3	21.96	22.85
NR	n77	632000	2.1046 RF power output:n77_60MHz_30kHz_632000;43;CP-OFDM 64QAM_Inner_1RB_Left;PC3	20.64	21.53
NR	n77	632000	2.1046 RF power output:n77_60MHz_30kHz_632000;44;CP-OFDM 64QAM_Inner_1RB_Right;PC3	21.47	22.36
NR	n77	632000	2.1046 RF power output:n77_60MHz_30kHz_632000;45;CP-OFDM 64QAM_Inner_Full;PC3	21.93	22.82
NR	n77	632000	2.1046 RF power output:n77_60MHz_30kHz_632000;46;CP-OFDM 64QAM_Edge_1RB_Left;PC3	20.55	21.44
NR	n77	632000	2.1046 RF power output:n77_60MHz_30kHz_632000;47;CP-OFDM 64QAM_Edge_1RB_Right;PC3	20.85	21.74
NR	n77	632000	2.1046 RF power output:n77_60MHz_30kHz_632000;48;CP-OFDM 64QAM_Outer_Full;PC3	20.64	21.53
NR	n77	632000	2.1046 RF power output:n77_60MHz_30kHz_632000;49;CP-OFDM 256QAM_Inner_1RB_Left;PC3	18.94	19.83
NR	n77	632000	2.1046 RF power output:n77_60MHz_30kHz_632000;50;CP-OFDM 256QAM_Inner_1RB_Right;PC3	19.26	20.15
NR	n77	632000	2.1046 RF power output:n77_60MHz_30kHz_632000;51;CP-OFDM 256QAM_Inner_Full;PC3	19.6	20.49
NR	n77	632000	2.1046 RF power output:n77_60MHz_30kHz_632000;52;CP-OFDM 256QAM_Edge_1RB_Left;PC3	18.62	19.51
NR	n77	632000	2.1046 RF power output:n77_60MHz_30kHz_632000;53;CP-OFDM 256QAM_Edge_1RB_Right;PC3	18.93	19.82
NR	n77	632000	2.1046 RF power output:n77_60MHz_30kHz_632000;54;CP-OFDM 256QAM_Outer_Full;PC3	18.53	19.42
NR	n77	633334	2.1046 RF power output:n77_60MHz_30kHz_633334;1;DFT-s-OFDM PI/2 BPSK_Inner_1RB_Left;PC3	21.32	22.21
NR	n77	633334	2.1046 RF power output:n77_60MHz_30kHz_633334;2;DFT-s-OFDM PI/2 BPSK_Inner_1RB_Right;PC3	21.09	21.98
NR	n77	633334	2.1046 RF power output:n77_60MHz_30kHz_633334;3;DFT-s-OFDM PI/2 BPSK_Inner_Full;PC3	22.14	23.03
NR	n77	633334	2.1046 RF power output:n77_60MHz_30kHz_633334;4;DFT-s-OFDM PI/2 BPSK_Edge_1RB_Left;PC3	21.4	22.29
NR	n77	633334	2.1046 RF power output:n77_60MHz_30kHz_633334;5;DFT-s-OFDM PI/2 BPSK_Edge_1RB_Right;PC3	21.2	22.09
NR	n77	633334	2.1046 RF power output:n77_60MHz_30kHz_633334;6;DFT-s-OFDM PI/2 BPSK_Outer_Full;PC3	22.14	23.03
NR	n77	633334	2.1046 RF power output:n77_60MHz_30kHz_633334;7;DFT-s-OFDM QPSK_Inner_1RB_Left;PC3	21.56	22.45
NR	n77	633334	2.1046 RF power output:n77_60MHz_30kHz_633334;8;DFT-s-OFDM QPSK_Inner_1RB_Right;PC3	21.36	22.25
NR	n77	633334	2.1046 RF power output:n77_60MHz_30kHz_633334;9;DFT-s-OFDM QPSK_Inner_Full;PC3	22.12	23.01
NR	n77	633334	2.1046 RF power output:n77_60MHz_30kHz_633334;10;DFT-s-OFDM QPSK_Edge_1RB_Left;PC3	21.38	22.27
NR	n77	633334	2.1046 RF power output:n77_60MHz_30kHz_633334;11;DFT-s-OFDM QPSK_Edge_1RB_Right;PC3	21.24	22.13
NR	n77	633334	2.1046 RF power output:n77_60MHz_30kHz_633334;12;DFT-s-OFDM QPSK_Outer_Full;PC3	22.14	23.03
NR	n77	633334	2.1046 RF power output:n77_60MHz_30kHz_633334;13;DFT-s-OFDM 16QAM_Inner_1RB_Left;PC3	21.67	22.56
NR	n77	633334	2.1046 RF power output:n77_60MHz_30kHz_633334;14;DFT-s-OFDM 16QAM_Inner_1RB_Right;PC3	21.46	22.35
NR	n77	633334	2.1046 RF power output:n77_60MHz_30kHz_633334;15;DFT-s-OFDM 16QAM_Inner_Full;PC3	22.17	23.06
NR	n77	633334	2.1046 RF power output:n77_60MHz_30kHz_633334;16;DFT-s-OFDM 16QAM_Edge_1RB_Left;PC3	21.33	22.22
NR	n77	633334	2.1046 RF power output:n77_60MHz_30kHz_633334;17;DFT-s-OFDM 16QAM_Edge_1RB_Right;PC3	21.19	22.08
NR	n77	633334	2.1046 RF power output:n77_60MHz_30kHz_633334;18;DFT-s-OFDM 16QAM_Outer_Full;PC3	22.15	23.04
NR	n77	633334	2.1046 RF power output:n77_60MHz_30kHz_633334;19;DFT-s-OFDM 64QAM_Inner_1RB_Left;PC3	21.12	22.01
NR	n77	633334	2.1046 RF power output:n77_60MHz_30kHz_633334;20;DFT-s-OFDM 64QAM_Inner_1RB_Right;PC3	20.92	21.81
NR	n77	633334	2.1046 RF power output:n77_60MHz_30kHz_633334;21;DFT-s-OFDM 64QAM_Inner_Full;PC3	22.11	23
NR	n77	633334	2.1046 RF power output:n77_60MHz_30kHz_633334;22;DFT-s-OFDM 64QAM_Edge_1RB_Left;PC3	20.97	21.86
NR	n77	633334	2.1046 RF power output:n77_60MHz_30kHz_633334;23;DFT-s-OFDM 64QAM_Edge_1RB_Right;PC3	21.22	22.11
NR	n77	633334	2.1046 RF power output:n77_60MHz_30kHz_633334;24;DFT-s-OFDM 64QAM_Outer_Full;PC3	21.9	22.79
NR	n77	633334	2.1046 RF power output:n77_60MHz_30kHz_633334;25;DFT-s-OFDM 256QAM_Inner_1RB_Left;PC3	21.37	22.26
NR	n77	633334	2.1046 RF power output:n77_60MHz_30kHz_633334;26;DFT-s-OFDM 256QAM_Inner_1RB_Right;PC3	21.16	22.05
NR	n77	633334	2.1046 RF power output:n77_60MHz_30kHz_633334;27;DFT-s-OFDM 256QAM_Inner_Full;PC3	21.76	22.65

System	Band	Channel	TestItem	Measured Value	EIRP
NR	n77	633334	2.1046 RF power output:n77_60MHz_30kHz_633334;28;DFT-s-OFDM 256QAM_Edge_1RB_Left;PC3	21.06	21.95
NR	n77	633334	2.1046 RF power output:n77_60MHz_30kHz_633334;29;DFT-s-OFDM 256QAM_Edge_1RB_Right;PC3	20.88	21.77
NR	n77	633334	2.1046 RF power output:n77_60MHz_30kHz_633334;30;DFT-s-OFDM 256QAM_Outer_Full;PC3	20.72	21.61
NR	n77	633334	2.1046 RF power output:n77_60MHz_30kHz_633334;31;CP-OFDM QPSK_Inner_1RB_Left;PC3	21.42	22.31
NR	n77	633334	2.1046 RF power output:n77_60MHz_30kHz_633334;32;CP-OFDM QPSK_Inner_1RB_Right;PC3	21.28	22.17
NR	n77	633334	2.1046 RF power output:n77_60MHz_30kHz_633334;33;CP-OFDM QPSK_Inner_Full;PC3	21.96	22.85
NR	n77	633334	2.1046 RF power output:n77_60MHz_30kHz_633334;34;CP-OFDM QPSK_Edge_1RB_Left;PC3	21.29	22.18
NR	n77	633334	2.1046 RF power output:n77_60MHz_30kHz_633334;35;CP-OFDM QPSK_Edge_1RB_Right;PC3	21.14	22.03
NR	n77	633334	2.1046 RF power output:n77_60MHz_30kHz_633334;36;CP-OFDM QPSK_Outer_Full;PC3	21.98	22.87
NR	n77	633334	2.1046 RF power output:n77_60MHz_30kHz_633334;37;CP-OFDM 16QAM_Inner_1RB_Left;PC3	21.55	22.44
NR	n77	633334	2.1046 RF power output:n77_60MHz_30kHz_633334;38;CP-OFDM 16QAM_Inner_1RB_Right;PC3	21.59	22.48
NR	n77	633334	2.1046 RF power output:n77_60MHz_30kHz_633334;39;CP-OFDM 16QAM_Inner_Full;PC3	22	22.89
NR	n77	633334	2.1046 RF power output:n77_60MHz_30kHz_633334;40;CP-OFDM 16QAM_Edge_1RB_Left;PC3	21.3	22.19
NR	n77	633334	2.1046 RF power output:n77_60MHz_30kHz_633334;41;CP-OFDM 16QAM_Edge_1RB_Right;PC3	21.29	22.18
NR	n77	633334	2.1046 RF power output:n77_60MHz_30kHz_633334;42;CP-OFDM 16QAM_Outer_Full;PC3	22.06	22.95
NR	n77	633334	2.1046 RF power output:n77_60MHz_30kHz_633334;43;CP-OFDM 64QAM_Inner_1RB_Left;PC3	21.35	22.24
NR	n77	633334	2.1046 RF power output:n77_60MHz_30kHz_633334;44;CP-OFDM 64QAM_Inner_1RB_Right;PC3	21.24	22.13
NR	n77	633334	2.1046 RF power output:n77_60MHz_30kHz_633334;45;CP-OFDM 64QAM_Inner_Full;PC3	22.01	22.9
NR	n77	633334	2.1046 RF power output:n77_60MHz_30kHz_633334;46;CP-OFDM 64QAM_Edge_1RB_Left;PC3	20.92	21.81
NR	n77	633334	2.1046 RF power output:n77_60MHz_30kHz_633334;47;CP-OFDM 64QAM_Edge_1RB_Right;PC3	20.77	21.66
NR	n77	633334	2.1046 RF power output:n77_60MHz_30kHz_633334;48;CP-OFDM 64QAM_Outer_Full;PC3	20.51	21.4
NR	n77	633334	2.1046 RF power output:n77_60MHz_30kHz_633334;49;CP-OFDM 256QAM_Inner_1RB_Left;PC3	19.19	20.08
NR	n77	633334	2.1046 RF power output:n77_60MHz_30kHz_633334;50;CP-OFDM 256QAM_Inner_1RB_Right;PC3	19.13	20.02
NR	n77	633334	2.1046 RF power output:n77_60MHz_30kHz_633334;51;CP-OFDM 256QAM_Inner_Full;PC3	19.64	20.53
NR	n77	633334	2.1046 RF power output:n77_60MHz_30kHz_633334;52;CP-OFDM 256QAM_Edge_1RB_Left;PC3	19	19.89
NR	n77	633334	2.1046 RF power output:n77_60MHz_30kHz_633334;53;CP-OFDM 256QAM_Edge_1RB_Right;PC3	18.83	19.72
NR	n77	633334	2.1046 RF power output:n77_60MHz_30kHz_633334;54;CP-OFDM 256QAM_Outer_Full;PC3	18.62	19.51
NR	n77	634666	2.1046 RF power output:n77_60MHz_30kHz_634666;1;DFT-s-OFDM PI/2 BPSK_Inner_1RB_Left;PC3	21.43	22.32
NR	n77	634666	2.1046 RF power output:n77_60MHz_30kHz_634666;2;DFT-s-OFDM PI/2 BPSK_Inner_1RB_Right;PC3	21.28	22.17
NR	n77	634666	2.1046 RF power output:n77_60MHz_30kHz_634666;3;DFT-s-OFDM PI/2 BPSK_Inner_Full;PC3	22.06	22.95
NR	n77	634666	2.1046 RF power output:n77_60MHz_30kHz_634666;4;DFT-s-OFDM PI/2 BPSK_Edge_1RB_Left;PC3	21.27	22.16
NR	n77	634666	2.1046 RF power output:n77_60MHz_30kHz_634666;5;DFT-s-OFDM PI/2 BPSK_Edge_1RB_Right;PC3	21.12	22.01
NR	n77	634666	2.1046 RF power output:n77_60MHz_30kHz_634666;6;DFT-s-OFDM PI/2 BPSK_Outer_Full;PC3	22.11	23
NR	n77	634666	2.1046 RF power output:n77_60MHz_30kHz_634666;7;DFT-s-OFDM QPSK_Inner_1RB_Left;PC3	21.43	22.32
NR	n77	634666	2.1046 RF power output:n77_60MHz_30kHz_634666;8;DFT-s-OFDM QPSK_Inner_1RB_Right;PC3	21.31	22.2
NR	n77	634666	2.1046 RF power output:n77_60MHz_30kHz_634666;9;DFT-s-OFDM QPSK_Inner_Full;PC3	22.11	23
NR	n77	634666	2.1046 RF power output:n77_60MHz_30kHz_634666;10;DFT-s-OFDM QPSK_Edge_1RB_Left;PC3	21.02	21.91
NR	n77	634666	2.1046 RF power output:n77_60MHz_30kHz_634666;11;DFT-s-OFDM QPSK_Edge_1RB_Right;PC3	20.87	21.76
NR	n77	634666	2.1046 RF power output:n77_60MHz_30kHz_634666;12;DFT-s-OFDM QPSK_Outer_Full;PC3	22.11	23
NR	n77	634666	2.1046 RF power output:n77_60MHz_30kHz_634666;13;DFT-s-OFDM 16QAM_Inner_1RB_Left;PC3	21.56	22.45
NR	n77	634666	2.1046 RF power output:n77_60MHz_30kHz_634666;14;DFT-s-OFDM 16QAM_Inner_1RB_Right;PC3	21.42	22.31
NR	n77	634666	2.1046 RF power output:n77_60MHz_30kHz_634666;15;DFT-s-OFDM 16QAM_Inner_Full;PC3	22.11	23
NR	n77	634666	2.1046 RF power output:n77_60MHz_30kHz_634666;16;DFT-s-OFDM 16QAM_Edge_1RB_Left;PC3	21.27	22.16
NR	n77	634666	2.1046 RF power output:n77_60MHz_30kHz_634666;17;DFT-s-OFDM 16QAM_Edge_1RB_Right;PC3	21.27	22.16
NR	n77	634666	2.1046 RF power output:n77_60MHz_30kHz_634666;18;DFT-s-OFDM 16QAM_Outer_Full;PC3	22.12	23.01
NR	n77	634666	2.1046 RF power output:n77_60MHz_30kHz_634666;19;DFT-s-OFDM 64QAM_Inner_1RB_Left;PC3	21.01	21.9
NR	n77	634666	2.1046 RF power output:n77_60MHz_30kHz_634666;20;DFT-s-OFDM 64QAM_Inner_1RB_Right;PC3	20.88	21.77
NR	n77	634666	2.1046 RF power output:n77_60MHz_30kHz_634666;21;DFT-s-OFDM 64QAM_Inner_Full;PC3	22.05	22.94
NR	n77	634666	2.1046 RF power output:n77_60MHz_30kHz_634666;22;DFT-s-OFDM 64QAM_Edge_1RB_Left;PC3	21.24	22.13
NR	n77	634666	2.1046 RF power output:n77_60MHz_30kHz_634666;23;DFT-s-OFDM 64QAM_Edge_1RB_Right;PC3	21.13	22.02
NR	n77	634666	2.1046 RF power output:n77_60MHz_30kHz_634666;24;DFT-s-OFDM 64QAM_Outer_Full;PC3	21.85	22.74
NR	n77	634666	2.1046 RF power output:n77_60MHz_30kHz_634666;25;DFT-s-OFDM 256QAM_Inner_1RB_Left;PC3	21.12	22.01
NR	n77	634666	2.1046 RF power output:n77_60MHz_30kHz_634666;26;DFT-s-OFDM 256QAM_Inner_1RB_Right;PC3	20.99	21.88
NR	n77	634666	2.1046 RF power output:n77_60MHz_30kHz_634666;27;DFT-s-OFDM 256QAM_Inner_Full;PC3	21.54	22.43
NR	n77	634666	2.1046 RF power output:n77_60MHz_30kHz_634666;28;DFT-s-OFDM 256QAM_Edge_1RB_Left;PC3	20.82	21.71
NR	n77	634666	2.1046 RF power output:n77_60MHz_30kHz_634666;29;DFT-s-OFDM 256QAM_Edge_1RB_Right;PC3	20.7	21.59
NR	n77	634666	2.1046 RF power output:n77_60MHz_30kHz_634666;30;DFT-s-OFDM 256QAM_Outer_Full;PC3	20.54	21.43
NR	n77	634666	2.1046 RF power output:n77_60MHz_30kHz_634666;31;CP-OFDM QPSK_Inner_1RB_Left;PC3	21.44	22.33
NR	n77	634666	2.1046 RF power output:n77_60MHz_30kHz_634666;32;CP-OFDM QPSK_Inner_1RB_Right;PC3	21.27	22.16
NR	n77	634666	2.1046 RF power output:n77_60MHz_30kHz_634666;33;CP-OFDM QPSK_Inner_Full;PC3	21.99	22.88
NR	n77	634666	2.1046 RF power output:n77_60MHz_30kHz_634666;34;CP-OFDM QPSK_Edge_1RB_Left;PC3	21.25	22.14
NR	n77	634666	2.1046 RF power output:n77_60MHz_30kHz_634666;35;CP-OFDM QPSK_Edge_1RB_Right;PC3	21.16	22.05
NR	n77	634666	2.1046 RF power output:n77_60MHz_30kHz_634666;36;CP-OFDM QPSK_Outer_Full;PC3	22.01	22.9
NR	n77	634666	2.1046 RF power output:n77_60MHz_30kHz_634666;37;CP-OFDM 16QAM_Inner_1RB_Left;PC3	21.47	22.36
NR	n77	634666	2.1046 RF power output:n77_60MHz_30kHz_634666;38;CP-OFDM 16QAM_Inner_1RB_Right;PC3	21.37	22.26
NR	n77	634666	2.1046 RF power output:n77_60MHz_30kHz_634666;39;CP-OFDM 16QAM_Inner_Full;PC3	21.96	22.85
NR	n77	634666	2.1046 RF power output:n77_60MHz_30kHz_634666;40;CP-OFDM 16QAM_Edge_1RB_Left;PC3	21.3	22.19
NR	n77	634666	2.1046 RF power output:n77_60MHz_30kHz_634666;41;CP-OFDM 16QAM_Edge_1RB_Right;PC3	21.22	22.11
NR	n77	634666	2.1046 RF power output:n77_60MHz_30kHz_634666;42;CP-OFDM 16QAM_Outer_Full;PC3	21.99	22.88
NR	n77	634666	2.1046 RF power output:n77_60MHz_30kHz_634666;43;CP-OFDM 64QAM_Inner_1RB_Left;PC3	20.89	21.78
NR	n77	634666	2.1046 RF power output:n77_60MHz_30kHz_634666;44;CP-OFDM 64QAM_Inner_1RB_Right;PC3	20.8	21.69
NR	n77	634666	2.1046 RF power output:n77_60MHz_30kHz_634666;45;CP-OFDM 64QAM_Inner_Full;PC3	21.9	22.79
NR	n77	634666	2.1046 RF power output:n77_60MHz_30kHz_634666;46;CP-OFDM 64QAM_Edge_1RB_Left;PC3	20.36	21.25
NR	n77	634666	2.1046 RF power output:n77_60MHz_30kHz_634666;47;CP-OFDM 64QAM_Edge_1RB_Right;PC3	20.71	21.6
NR	n77	634666	2.1046 RF power output:n77_60MHz_30kHz_634666;48;CP-OFDM 64QAM_Outer_Full;PC3	20.54	21.43
NR	n77	634666	2.1046 RF power output:n77_60MHz_30kHz_634666;49;CP-OFDM 256QAM_Inner_1RB_Left;PC3	19.13	20.02
NR	n77	634666	2.1046 RF power output:n77_60MHz_30kHz_634666;50;CP-OFDM 256QAM_Inner_1RB_Right;PC3	19	19.89
NR	n77	634666	2.1046 RF power output:n77_60MHz_30kHz_634666;51;CP-OFDM 256QAM_Inner_Full;PC3	19.53	20.42
NR	n77	634666	2.1046 RF power output:n77_60MHz_30kHz_634666;52;CP-OFDM 256QAM_Edge_1RB_Left;PC3	18.82	19.71
NR	n77	634666	2.1046 RF power output:n77_60MHz_30kHz_634666;53;CP-OFDM 256QAM_Edge_1RB_Right;PC3	18.7	19.59
NR	n77	634666	2.1046 RF power output:n77_60MHz_30kHz_634666;54;CP-OFDM 256QAM_Outer_Full;PC3	18.39	19.28