FCC Radio Test Report

FCC ID: 2A5LO-TOZEDZLTX100

This report concerns: Original Grant

Project No.	:	2312C154
Equipment	:	5G Wireless Router
Brand Name	:	Tozed Kangwei
Test Model	:	ZLT X100 PRO
Series Model	:	N/A
Applicant	:	Tozed Kangwei Tech Co., Ltd
Address	:	Room 1301, NO. 37 Jinlong , Nansha Street, Xiangjiang Financial Business Center, Nansha District, Guangzhou
Manufacturer	:	Tozed Kangwei Tech Co., Ltd
Address	:	Room 1301, NO. 37 Jinlong , Nansha Street, Xiangjiang Financial Business Center, Nansha District, Guangzhou
Factory	:	Tozed Kangwei Tech Co., Ltd
Address	:	Room 1301, NO. 37 Jinlong , Nansha Street, Xiangjiang Financial Business Center, Nansha District, Guangzhou
Date of Receipt	:	Dec. 25, 2023
Date of Test	:	Dec. 26, 2023 ~ Jan. 28, 2024
Issued Date	:	Jan. 31, 2024
Report Version	:	R00
Test Sample	:	Engineering Sample No.: DG2023122564 for radiated, DG2023122562 and DG2023122565 for conducted.
Standard(s)	:	47 CFR FCC Part 27 Subpart Q 47 CFR FCC Part 2

The above equipment has been tested and found compliance with the requirement of the relative standards by BTL Inc.

Prepared by : Edward Li

Edward Li

Approved by : Steven Lu

Steven Lu

Room 108, Building 2, No. 1, Yile Road, Songshan Lake Zone, Dongguan City, Guangdong 523000 China

Tel: +86-769-8318-3000 Web: www.newbtl.com Service mail: btl_qa@newbtl.com

Declaration

BTL represents to the client that testing is done in accordance with standard procedures as applicable and that test instruments used has been calibrated with standards traceable to international standard(s) and/or national standard(s).

BTL's reports apply only to the specific samples tested under conditions. It is manufacture's responsibility to ensure that additional production units of this model are manufactured with the identical electrical and mechanical components. **BTL** shall have no liability for any declarations, inferences or generalizations drawn by the client or others from **BTL** issued reports.

The report must not be used by the client to claim product certification, approval, or endorsement by NVLAP, NIST, or any agency of the U.S. Government.

This report is the confidential property of the client. As a mutual protection to the clients, the public and ourselves, the test report shall not be reproduced, except in full, without our written approval.

BTL's laboratory quality assurance procedures are in compliance with the ISO/IEC 17025: 2017 requirements, and accredited by the conformity assessment authorities listed in this test report.

BTL is not responsible for the sampling stage, so the results only apply to the sample as received.

The information, data and test plan are provided by manufacturer which may affect the validity of results, so it is manufacturer's responsibility to ensure that the apparatus meets the essential requirements of applied standards and in all the possible configurations as representative of its intended use.

Limitation

For the use of the authority's logo is limited unless the Test Standard(s)/Scope(s)/Item(s) mentioned in this test report is (are) included in the conformity assessment authorities acceptance respective.
Please note that the measurement uncertainty is provided for informational purpose only and are not use in determining the Pass/Fail results.

Table of Contents Page

REPORT ISSUED HISTORY 5

1 . APPLICABLE STANDARDS 6

2 . SUMMARY OF TEST RESULTS 6

2.1 TEST FACILITY 7

2.2 MEASUREMENT UNCERTAINTY 7

2.3 TEST ENVIRONMENT CONDITIONS 8

3 . GENERAL INFORMATION 9

3.1 GENERAL DESCRIPTION OF EUT 9

3.2 DESCRIPTION OF TEST MODES 13

3.3 BLOCK DIGRAM SHOWING THECONFIGURATIONOFSYSTEMTESTED 16

2.4 DESCRIPTION OF SUPPORT UNITS 16

4 . TEST RESULT 17

4.1 OUTPUT POWER MEASUREMENT 17

4.1.1 LIMIT 17

4.1.2 TEST PROCEDURE 17

4.1.3 TEST SETUP LAYOUT 17

4.1.4 TEST DEVIATION 17

4.1.5 TEST RESULTS 17

4.2 OCCUPIED BANDWIDTH MEASUREMENT 18

4.2.1 TEST PROCEDURE 18

4.2.2 TEST SETUP LAYOUT 18

4.2.3 TEST DEVIATION 18

4.2.4 TEST RESULTS 18

4.3 CONDUCTED SPURIOUS EMISSIONS MEASUREMENT 19

4.3.1 LIMIT 19

4.3.2 TEST PROCEDURES 19

4.3.3 TEST SETUP LAYOUT 19

4.3.4 TEST DEVIATION 19

4.3.5 TEST RESULTS 19

4.4 RADIATED SPURIOUS EMISSIONS MEASUREMENT 20

4.4.1 LIMIT 20

4.4.2 TEST PROCEDURES 20

4.4.3 TEST SETUP LAYOUT 20

4.4.4 TEST RESULTS (9KHZ TO 30MHZ) 21

4.4.5 TEST RESULTS (30MHZ TO 1000MHZ) 21

4.4.6 TEST RESULTS (ABOVE 1000MHZ) 21

4.5 BAND EDGE MEASUREMENT 22

4.5.1 LIMIT 22

Table of Contents Page

4.5.2 TEST PROCEDURES 22
4.5.3 TEST SETUP LAYOUT 22
4.5.4 TEST DEVIATION 22
4.5.5 TEST RESULTS 22
4.6 PEAK TO AVERAGE RATIO MEASUREMENT 23
4.6.1 LIMIT 23
4.6.2 TEST PROCEDURES 23
4.6.3 TEST SETUP LAYOUT 23
4.6.4 TEST DEVIATION 23
4.6.5 TEST RESULTS 23
4.7 FREQUENCY STABILITY MEASUREMENT 24
4.7.1 LIMIT 24
4.7.2 TEST PROCEDURES 24
4.7.3 TEST SETUP LAYOUT 24
4.7.4 TEST DEVIATION 24
4.7.5 TEST RESULTS 24
4. LIST OF MEASUREMENT EQUIPMENTS 25
5. EUT TEST PHOTO 27
APPENDIX A - OUTPUT POWER 30
APPENDIX B - OCCUPIED BANDWIDTH 81
APPENDIX C - CONDUCTED SPURIOUS EMISSIONS 93
APPENDIX D - RADIATED SPURIOUS EMISSIONS (9KHZ TO 30MHZ) 103
APPENDIX E - RADIATED SPURIOUS EMISSIONS (30MHZ TO 1GHZ) 105
APPENDIX F - RADIATED SPURIOUS EMISSIONS (ABOVE 1GHZ) 109
APPENDIX G - BAND EDGE 119
APPENDIX H - PEAK TO AVERAGE RATIO 126
APPENDIX I - FREQUENCY STABILITY 128

REPORT ISSUED HISTORY

Report No.	Version	Description	Issued Date	Note
BTL-FCCP-7-2312C154	R00	Original Report.	Jan. 31, 2024	Valid

1. APPLICABLE STANDARDS

The following reference test guidance is not within the scope of accreditation of NVLAP:
ANSI C63.26-2015
FCC KDB 971168 D01 Power Meas License Digital Systems v03r01

2. SUMMARY OF TEST RESULTS

Test procedures according to the technical standard(s):

FCC Part 27 Subpart Q & Part 2			
Standard(s) Section	**Test Item**	**Judgment**	**Remark**
2.1046	Output Power	PASS	------
27.50(k)(3)	Equivalent Isotropic Radiated Power	PASS	------
2.1049	Occupied Bandwidth	PASS	------
2.1051 27.53(n)(2)	Conducted Spurious Emissions	PASS	------
2.1051 27.53(n)(2)	Radiated Spurious Emissions	PASS	------
2.1051 27.53(n)(2)	Band Edge Measurements	PASS	------
27.50(k)(4)	Peak To Average Ratio	PASS	------
2.1055 27.54	Frequency Stability	PASS	------

Note:
(1) “N/A” denotes test is not applicable in this test report.

2.1 TEST FACILITY

The test facilities used to collect the test data in this report is at the location of Room 108, Building 2, No. 1, Yile Road, Songshan Lake Zone, Dongguan City, Guangdong 523000.
BTL's Registration Number for FCC: 568794
BTL's Designation Number for FCC: CN5041

2.2 MEASUREMENT UNCERTAINTY

The measurement uncertainty figures shall be calculated according the methods described in the ETSI TR 100 028 and shall correspond to an expansion factor (coverage factor) k=1.96 or k=2(which provide confidence levels of respectively 90% and 95.45% in the case where the distributions characterizing the actual measurement uncertainties are normal (Gaussian)).
Measurement Uncertainty for a Level of Confidence of 95 %, U=2xUc(y).

The BTL measurement uncertainty as below table:

A. Radiated Measurement:

Test Site	Method	Measurement Frequency Range	*U*,(dB)
SSL-CB01	CISPR	9kHz ~ 30MHz	2.74

Test Site	Method	Measurement Frequency Range	Ant. H / V	*U*,(dB)
SSL-CB01 (3m)	CISPR	30MHz ~ 200MHz	V	4.70
		30MHz ~ 200MHz	H	3.56
		200MHz ~ 1,000MHz	V	4.92
		200MHz ~ 1,000MHz	H	4.54

Test Site	Method	Measurement Frequency Range	*U*,(dB)
SSL-CB01 (3m)	CISPR	1GHz ~ 6GHz	4.56
		6GHz ~ 18GHz	5.14

Test Site	Method	Measurement Frequency Range	*U*,(dB)
SSL-CB01 (1m)	CISPR	18 ~ 26.5 GHz	3.30
		26.5 ~ 40 GHz	3.82

B. Other Measurement:

Parameter	Uncertainty
Spectrum Bandwidth	±3.8 %
Maximum Output Power	±0.95 dB
Power Spectral Density	±0.86 dB
Frequency Stability	±0.16 dB
Temperature	±0.08 °C
Time	±0.58 %
Supply voltages	±0.3 %

Note: Unless specifically mentioned, the uncertainty of measurement has not been taken into account to declare the compliance or non-compliance to the specification.

2.3 TEST ENVIRONMENT CONDITIONS

Test Item	Temperature	Humidity	**Test Voltage**	Tested By
Output Power & ERP	24°C	40%	DC 12V	Feilx Ye Gana Cai Edward Li
Occupied Bandwidth	24°C	40%	DC 12V	Feilx Ye Gana Cai Edw rd Li
Conducted Spurious Emissions	24°C	40%	DC 12V	Feilx Ye Gana Cai Edward Li
Radiated Spurious Emissions (9 kHz to 30 MHz)	25°C	60%	AC 120V/60Hz	Max Wang
Radiated Spurious Emissions (30 MHz to 1000 MHz)	24°C	43%	AC 120V/60Hz	Geoffrey Zou
Radiated Spurious Emissions (Above 1000 MHz)	23~24°C	43~46%	AC 120V/60Hz	Max Wang
Band Edge	24°C	40%	DC 12V	Feilx Ye Gana Cai Edward Li
Peak to Average Ratio	24°C	40%	DC 12V	Feilx Ye Gana Cai Edward Li
Frequency Stability	Normal & Extreme	40%	Normal & Extreme	Feilx Ye Gana Cai Edward Li

3. GENERAL INFORMATION

3.1 GENERAL DESCRIPTION OF EUT

Equipment	5G Wireless Router				
Brand Name	Tozed Kangwei				
Test Model	ZLT X100 PRO				
Series Model	N/A				
Model Difference(s)	N/A				
Software Version	V1.0				
Hardware Version	TZ7.823.806A				
Power Source	DC voltage supplied from AC adapter. 1# Manufacturer / Model: KELI / KL-WA120YYY-G1 2# Manufacturer / Model: JiYin / JYSY018-1201500UD				
Power Rating	1# I/P: 100-240V~ 50/60Hz 0.7A O/P: 12V ⎓ 1.5A 2# I/P: 100-240V~ 50/60Hz 0.5A O/P: 12V ⎓ 1.5A				
Radio System Type	SA&NSA				
Power Class	2(SA), 3(NSA)				
Operation Bands	SA: n77, n78				
	UL MIMO: n77, n78				
	DC_7A_n78, DC_66A_n78, DC_66A-66A_n78, DC_7C_n78, DC_4A_n78				
SCS	30KHz				
Bandwidth	10MHz, 15MHz, 20MHz, 25MHz, 30MHz, 40MHz, 50MHz, 60MHz, 80MHz, 90MHz,100MHz				
Modulation Type	DFT-s-OFDM PI/2 BPSK				
	DFT-s-OFDM QPSK		CP-OFDM QPSK		
	DFT-s-OFDM 16QAM		CP-OFDM 16QAM		
	DFT-s-OFDM 64QAM		CP-OFDM 64QAM		
	DFT-s-OFDM 256QAM		CP-OFDM 256QAM		
IMEI No.	Conducted	862378060001796, 862378060001309			
	Radiated	862378060001259			
Max. E.I.R.P (dBm)(Note 2)	Band/ Bandwidth (MHz)	Modulation (DFT-s-OFDM)	SISO (Ant.3)	Modulation (CP-OFDM)	MIMO (Ant.3+Ant.6)
	n77 (BW 10MHz)	PI/2 BPSK	28.24	QPSK	28.10
		QPSK	28.21	16QAM	27.59
		16QAM	27.06	64QAM	26.86
		64QAM	26.02	256QAM	22.88
		256QAM	23.58		
	n77 (BW 15MHz)	PI/2 BPSK	28.55	QPSK	28.32
		QPSK	28.55	16QAM	27.86
		16QAM	27.39	64QAM	26.92
		64QAM	26.34	256QAM	23.06
		256QAM	23.94		
	n77 (BW 20MHz)	PI/2 BPSK	28.67	QPSK	28.62
		QPSK	28.65	16QAM	28.16
		16QAM	27.47	64QAM	26.87
		64QAM	26.49	256QAM	22.99
		256QAM	24		
	n77 (BW 25MHz)	PI/2 BPSK	27.32	QPSK	28.60
		QPSK	27.32	16QAM	28.24
		16QAM	26.11	64QAM	26.59
		64QAM	25.09	256QAM	23.12
		256QAM	22.49		
	n77 (BW 30MHz)	PI/2 BPSK	28.97	QPSK	29.12
		QPSK	28.95	16QAM	28.59
		16QAM	27.81	64QAM	28.03
		64QAM	26.79	256QAM	24.02
		256QAM	24.36		

Max. E.I.R.P (dBm)(Note 2)	n77 (BW 40MHz)	PI/2 BPSK	28.94	QPSK	29.03
		QPSK	28.91	16QAM	28.50
		16QAM	27.75	64QAM	27.50
		64QAM	26.76	256QAM	23.73
		256QAM	24.31		
	n77 (BW 50MHz)	PI/2 BPSK	28.59	QPSK	28.64
		QPSK	28.57	16QAM	28.12
		16QAM	27.40	64QAM	26.45
		64QAM	26.41	256QAM	22.96
		256QAM	23.98		
	n77 (BW 60MHz)	PI/2 BPSK	28.69	QPSK	28.75
		QPSK	28.66	16QAM	28.46
		16QAM	27.73	64QAM	26.97
		64QAM	26.55	256QAM	23.43
		256QAM	24.07		
	n77 (BW 80MHz)	PI/2 BPSK	28.8	QPSK	28.88
		QPSK	28.78	16QAM	28.41
		16QAM	27.72	64QAM	27.05
		64QAM	26.76	256QAM	23.59
		256QAM	24.05		
	n77 (BW 90MHz)	PI/2 BPSK	29.38	QPSK	28.86
		QPSK	29.37	16QAM	28.75
		16QAM	28.56	64QAM	28.41
		64QAM	27.38	256QAM	24.40
		256QAM	24.69		
	n77 (BW 100MHz)	PI/2 BPSK	28.46	QPSK	28.75
		QPSK	28.45	16QAM	28.38
		16QAM	27.49	64QAM	26.97
		64QAM	26.36	256QAM	23.4
		256QAM	23.90		
	n78 (BW 10MHz)	PI/2 BPSK	28.31	QPSK	27.97
		QPSK	28.28	16QAM	27.58
		16QAM	27.25	64QAM	26.96
		64QAM	26.21	256QAM	22.80
		256QAM	23.65		
	n78 (BW 15MHz)	PI/2 BPSK	28.58	QPSK	28.22
		QPSK	28.55	16QAM	27.93
		16QAM	27.53	64QAM	26.79
		64QAM	26.47	256QAM	22.80
		256QAM	23.97		
	n78 (BW 20MHz)	PI/2 BPSK	28.68	QPSK	28.27
		QPSK	28.66	16QAM	27.81
		16QAM	27.59	64QAM	26.49
		64QAM	26.6	256QAM	22.60
		256QAM	24.04		
	n78 (BW 25MHz)	PI/2 BPSK	26.71	QPSK	28.28
		QPSK	28.97	16QAM	27.91
		16QAM	25.7	64QAM	26.32
		64QAM	24.79	256QAM	22.73
		256QAM	22.15		
	n78 (BW 30MHz)	PI/2 BPSK	28.99	QPSK	28.65
		QPSK	28.89	16QAM	28.22
		16QAM	27.95	64QAM	27.91
		64QAM	26.90	256QAM	23.93
		256QAM	24.38		

Max. E.I.R.P (dBm)(Note 2)	n78 (BW 40MHz)	PI/2 BPSK	28.92	QPSK	28.87
		QPSK	28.89	16QAM	28.45
		16QAM	27.85	64QAM	27.24
		64QAM	26.84	256QAM	23.54
		256QAM	24.29		
	n78 (BW 50MHz)	PI/2 BPSK	28.6	QPSK	28.50
		QPSK	28.58	16QAM	28.11
		16QAM	27.51	64QAM	26.45
		64QAM	26.53	256QAM	22.92
		256QAM	23.95		
	n78 (BW 60MHz)	PI/2 BPSK	28.7	QPSK	28.70
		QPSK	28.68	16QAM	28.26
		16QAM	27.63	64QAM	26.72
		64QAM	26.64	256QAM	23.25
		256QAM	24.03		
	n78 (BW 80MHz)	PI/2 BPSK	28.65	QPSK	28.74
		QPSK	28.63	16QAM	28.27
		16QAM	25.57	64QAM	26.84
		64QAM	26.56	256QAM	23.33
		256QAM	24.07		
	n78 (BW 90MHz)	PI/2 BPSK	29.38	QPSK	28.83
		QPSK	29.38	16QAM	28.78
		16QAM	28.47	64QAM	28.46
		64QAM	27.47	256QAM	24.32
		256QAM	24.92		
	n78 (BW 100MHz)	PI/2 BPSK	28.49	QPSK	28.60
		QPSK	28.47	16QAM	27.35
		16QAM	27.46	64QAM	26.90
		64QAM	26.4	256QAM	23.21
		256QAM	23.87		

Note:

1. For a more detailed features description, please refer to the manufacturer’s specifications or the user's manual.

2. Due to the e.i.r.p of DFT-S-OFDM modulation mode is higher than that of CP-OFMD, so the SA max e.i.r.p of DFT-S-OFDM were recorded in the table.

3. Channel List:

NR n77 & n78(UL/DL: 3450-3550MHz)			
Test Frequency ID	Bandwidth (MHz)	EARFCN	Frequency (UL and DL) (MHz)
Low Range	10	630334	3455.01
	15	630500	3457.5
	20	630668	3460.02
	25	630834	3462.51
	30	631000	3465.00
	40	631334	3470.01
	50	631668	3475.02
	60	632000	3480.00
	80	632668	3490.02
	90	633000	3495.00
	100	-	-
Mid Range	10/15/20/25/30/40/ 50/60/80/90/100	633334	3500.01
High Range	10	636332	3544.98
	15	636166	3542.49
	20	636000	3540.00
	25	635834	3537.51
	30	635666	3534.99
	40	635332	3529.98
	50	635000	3525.00
	60	634666	3519.99
	80	634000	3510.00
	90	633666	3504.99
	100	-	-

4. Table for Filed Antenna:

Brand	Model Name	Antenna Type	Connector	Gain (dBi)	Note
ZTX	X100 PRO-ANT3	PCB	N/A	2.75	5G NR n77&n78 (Ant.3)
	X100 PRO-ANT6	PCB	N/A	3.28	5G NR n77&n78 (Ant.6)

Note:

1) This EUT supports MIMO, any transmit signals are correlated with each other, so Directional gain=$10\log[(10^{G1/20}+10^{G2/20}+...10^{GN/20})^2/N]$dBi. So the Directional gain of n77&n78= $10\log[(10^{2.75/20}+10^{3.28/20})^2/2]$dBi =6.03.
2) SISO mode only supports Ant 3.
3) The antenna gain is provided by the manufacturer.

3.2 DESCRIPTION OF TEST MODES

Following mode(s) is (were) found to be the worst case(s) and selected for the final test.

NR n78				
Test Item	Tested Channel	Channel Bandwidth	Modulation	RB allocation
Output Power & EIRP	630334, 633334, 636332	10MHz	DFT-s-OFDM PI/2 BPSK, DFT-s-OFDM PI/2 QPSK, DFT-s-OFDM PI/2 16QAM, DFT-s-OFDM PI/2 64QAM, DFT-s-OFDM PI/2 256QAM CP-OFDM QPSK, CP-OFDM 16QAM, CP-OFDM 64QAM, CP-OFDM 256QAM	Inner 1RB Left Inner 1RB Right Inner Full
	630500, 633334, 636166	15MHz		
	630668, 633334, 636000	20MHz		
	630834, 633334, 635834	25MHz		
	631000, 633334, 635666	30MHz		
	631334, 633334, 635332	40MHz		
	631668, 633334, 635000	50MHz		
	632000, 633334, 634666	60MHz		
	632668, 633334, 634000	80MHz		
	633000, 633334, 633666	90MHz		
	633334	100MHz		
Occupied Bandwidth	633334	10MHz	DFT-s-OFDM PI/2 BPSK, DFT-s-OFDM PI/2 QPSK, DFT-s-OFDM PI/2 16QAM, DFT-s-OFDM PI/2 64QAM, DFT-s-OFDM PI/2 256QAM CP-OFDM QPSK, CP-OFDM 16QAM, CP-OFDM 64QAM, CP-OFDM 256QAM	Outer Full
	633334	15MHz		
	633334	20MHz		
	633334	25MHz		
	633334	30MHz		
	633334	40MHz		
	633334	50MHz		
	633334	60MHz		
	633334	80MHz		
	633334	90MHz		
	633334	100MHz		
Conducted Spurious Emission	630334, 633334, 636332	10MHz	DFT-s-OFDM PI/2 BPSK, DFT-s-OFDM PI/2 QPSK	1RB # 0
	631668, 633334, 635000	50MHz		
	633334	100MHz		
Radiated Spurious Emission	633334	10MHz	DFT-s-OFDM QPSK	1RB # 0
	633334	100MHz		
Band Edge	630334, 636332	10MHz	DFT-s-OFDM PI/2 BPSK, DFT-s-OFDM PI/2QPSK	Edge 1RB Left Edge 1RB Right Outer Full
	631668, 635000	50MHz		
	633334	100MHz		
Peak To Average Ratio	630334, 633334, 636332	10MHz	DFT-s-OFDM PI/2 BPSK, DFT-s-OFDM PI/2QPSK	Edge 1RB Left Outer Full
Frequency Stability	630334, 636332	10MHz	DFT-s-OFDM QPSK	Outer Full

NR n77				
Test Item	Tested Channel	Channel Bandwidth	Modulation	RB allocation
Output Power & EIRP	630334, 633334, 636332	10MHz	DFT-s-OFDM PI/2 BPSK, DFT-s-OFDM PI/2 QPSK, DFT-s-OFDM PI/2 16QAM, DFT-s-OFDM PI/2 64QAM, DFT-s-OFDM PI/2 256QAM CP-OFDM QPSK, CP-OFDM 16QAM, CP-OFDM 64QAM, CP-OFDM 256QAM	Inner 1RB Left Inner 1RB Right Inner Full
	630500, 633334, 636166	15MHz		
	630668, 633334, 636000	20MHz		
	630834, 633334, 635834	25MHz		
	631000, 633334, 635666	30MHz		
	631334, 633334, 635332	40MHz		
	631668, 633334, 635000	50MHz		
	632000, 633334, 634666	60MHz		
	632668, 633334, 634000	80MHz		
	633000, 633334, 633666	90MHz		
	633334	100MHz		
Radiated Spurious Emission	633334	10MHz	DFT-s-OFDM QPSK	1RB # 0
	633334	100MHz		

NR n78 MIMO				
Test Item	Tested Channel	Channel Bandwidth	Modulation	RB allocation
Output Power & EIRP	630334, 633334, 636332	10MHz	CP-OFDM QPSK, CP-OFDM 16QAM, CP-OFDM 64QAM, CP-OFDM 256QAM	Inner 1RB Left Inner 1RB Right Inner Full
	630500, 633334, 636166	15MHz		
	630668, 633334, 636000	20MHz		
	630834, 633334, 635834	25MHz		
	631000, 633334, 635666	30MHz		
	631334, 633334, 635332	40MHz		
	631668, 633334, 635000	50MHz		
	632000, 633334, 634666	60MHz		
	632668, 633334, 634000	80MHz		
	633000, 633334, 633666	90MHz		
	630334, 633334, 636332	10MHz		
Conducted Spurious Emission	630334, 633334, 636332	10MHz	CP-OFDM QPSK, CP-OFDM 16QAM	1RB # 0
	631668, 633334, 635000	50MHz		
	633334	100MHz		

DC_7A_n78				
Test Item	Tested Channel	Channel Bandwidth	Modulation	RB allocation
Radiated Spurious Emission	Mid-CH	10MHz	DFT-s-OFDM QPSK	1RB # 0
	Mid-CH	100MHz		

Note:

1) Since the power of DFT-S-OFDM modulation mode is higher than that of CP-OFMD, and the power of PI/2 BPSK and QPSK is greater than that of other modulation modes, we chose DFT-S-OFDM PI/2 BPSK and DFT-S-OFDM QPSK modulation mode to test other items except power and OBW.
2) Since n78 frequency band covers n77 and the power of n77 is not greater than n78, only n78 is performed and recorded in this report.
3) The equipment supports SA and NSA modes for n77 and n78. We tested the maximum power of SA and NSA, and the maximum power of SA is the worst case. Therefore, all conducted items are executed in SA mode. NSA only evaluates the worst configuration of SA and record radiated spurious emission test.
4) Radiated Spurious Emission was assessed for low, medium, high channels and all TX antennas, with only the worst data recorded in the report.
5) For radiated emissions below 1 GHz test, all adapters had been pre-tested and in this report only recorded the worst adapter(Manufacturer / Model: JiYi /JYSY018-1201500UD).

5. RB allocation:

Bandwidth	100	90	80	70	60	50	40	30	25	20	15	10
SCS 30KHz CP-OFDM	RB Size/ Offset	RB Size/ Offset	RB Size/ Offset	RB Size/ Offset	RB Size/ Offset	RB Size/ Offset	RB Size/ Offset	RB Size/ Offset	RB Size/ Offset	RB Size/ Offset	RB Size/ Offset	RB Size/ Offset
Edge_1RB _Left	1/0	1/0	1/0	1/0	1/0	1/0	1/0	1/0	1/0	1/0	1/0	1/0
Inner_1RB _Left	1/1	1/1	1/1	1/1	1/1	1/1	1/1	1/1	1/1	1/1	1/1	1/1
Inner_1RB _Right	1/271	1/243	1/215	1/187	1/160	1/131	1/104	1/76	1/63	1/49	1/36	1/22
Edge_1RB _Right	1/272	1/244	1/216	1/188	1/161	1/132	1/105	1/77	1/64	1/50	1/37	1/23
Edge_Full _Left	2/0	2/0	2/0	2/0	2/0	2/0	2/0	2/0	2/0	2/0	2/0	2/0
Edge_Full _Right	2/271	2/243	2/215	2/187	2/160	2/131	2/104	2/76	2/63	2/49	2/36	2/22
Inner _Full	137/68	123/61	109/54	95/47	81/40	67/33	53/26	39/19	33/16	25/12	19/9	12/6
Outer _Full	273/0	245/0	217/0	189/0	162/0	133/0	106/0	78/0	65/0	51/0	36/0	24/0

Bandwidth	100	90	80	70	60	50	40	30	25	20	15	10
SCS 30KHz DFT-s-OFDM	RB Size/ Offset	RB Size/ Offset	RB Size/ Offset	RB Size/ Offset	RB Size/ Offset	RB Size/ Offset	RB Size/ Offset	RB Size/ Offset	RB Size/ Offset	RB Size/ Offset	RB Size/ Offset	RB Size/ Offset
Edge_1RB _Left	1/0	1/0	1/0	1/0	1/0	1/0	1/0	1/0	1/0	1/0	1/0	1/0
Inner_1RB _Left	1/1	1/1	1/1	1/1	1/1	1/1	1/1	1/1	1/1	1/1	1/1	1/0
Inner_1RB _Right	1/271	1/243	1/215	1/187	1/160	1/131	1/104	1/76	1/63	1/49	1/36	1/22
Edge_1RB _Right	1/272	1/244	1/216	1/188	1/161	1/132	1/105	1/77	1/64	1/50	1/37	1/23
Edge_Full _Left	2/0	2/0	2/0	2/0	2/0	2/0	2/0	2/0	2/0	2/0	2/0	2/0
Edge_Full _Right	2/271	2/243	2/215	2/187	2/160	2/131	2/104	2/76	2/63	2/49	2/36	2/22
Inner _Full	135/67	120/60	108/54	90/45	81/40	64/32	50/25	36/18	32/16	25/12	18/9	12/6
Outer _Full	270/0	240/0	216/0	189/0	162/0	128/0	100/0	75/0	64/0	50/0	38/0	24/0

3.3 BLOCK DIGRAM SHOWING THECONFIGURATIONOFSYSTEMTESTED

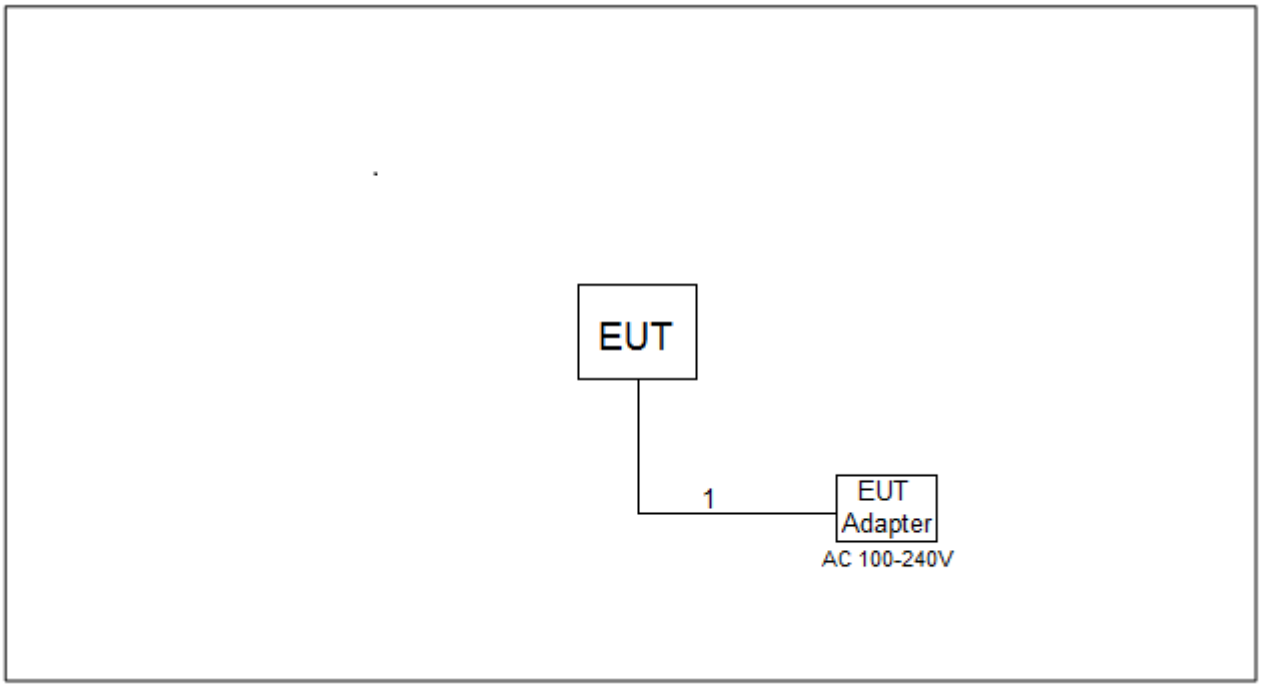

2.4 DESCRIPTION OF SUPPORT UNITS

The EUT has been tested as an independent unit together with other necessary accessories or support units. The following support units or accessories were used to form a representative test configuration during the tests.

Item	Equipment	Mfr/Brand	Model/Type No.	Series No.
-	-	-	-	-

Item	Cable Type	Shielded Type	Ferrite Core	Length
1	DC Cable	NO	NO	1.5m

4. TEST RESULT

4.1 OUTPUT POWER MEASUREMENT

4.1.1 LIMIT

Mobile devices are limited to 1Watt (30 dBm) EIRP.

4.1.2 TEST PROCEDURE

The testing follows FCC KDB 971168 v03r01 Section 5 or ANSI C63.26-2015 Section 5.2.

EIRP:

EIRP = Output Power + Antenan gain

ERP:

ERP = EIRP-2.15

Output Power:

The EUT was set up for the maximum power with NR link data modulation and link up with simulator. Set the EUT to transmit under low, middle and high channel and record the power level shown on simulator.

4.1.3 TEST SETUP LAYOUT

Output Power Measurement

4.1.4 TEST DEVIATION

No deviation

4.1.5 TEST RESULTS

Please refer to the APPENDIX A.

4.2 OCCUPIED BANDWIDTH MEASUREMENT

4.2.1 TEST PROCEDURE

The testing follows FCC KDB 971168 v03r01 Section 4 or ANSI C63.26-2015 Section 5.4.

1. The EUT makes a call to the communication simulator. All measurements were done at low, middle and high operational frequency range. The communication simulator station system controlled a EUT to export maximum output power under transmission mode and specific channel frequency. Use OBW measurement function of Spectrum analyzer to measure 99 % occupied bandwidth and 26dB bandwidth.
2. The EUT was connected to spectrum analyzer and system simulator via a power divider.
3. RBW=(1% ~ 5%)*EBW
   VBW≥3* RBW
4. Set spectrum analyzer with Peak detector.

4.2.2 TEST SETUP LAYOUT

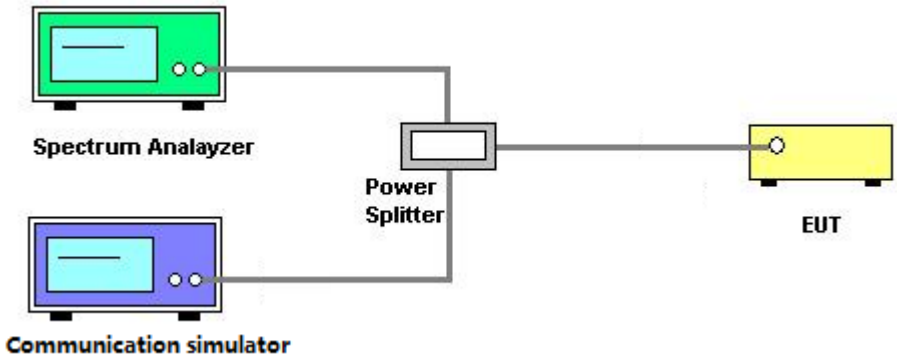

4.2.3 TEST DEVIATION

No deviation

4.2.4 TEST RESULTS

Please refer to the APPENDIX B.

4.3 CONDUCTED SPURIOUS EMISSIONS MEASUREMENT

4.3.1 LIMIT

For mobile operations in the 3450-3550 MHz band, the conducted power of any emission outside the licensee's authorized bandwidth shall not exceed -13 dBm/MHz.

4.3.2 TEST PROCEDURES

The testing follows FCC KDB 971168 v03r01 Section 6 or ANSI C63.26-2015 Section 5.7.

1. The EUT was connected to spectrum analyzer and system simulator via a power divider.
2. The conducted spurious emission of middle channel for the highest RF powers were measured. Set RBW=1MHz.
3. Set spectrum analyzer with Average detector and trace mode with trace average.
4. The RF fundamental frequency should be excluded against the limit line in the operating frequency band.

4.3.3 TEST SETUP LAYOUT

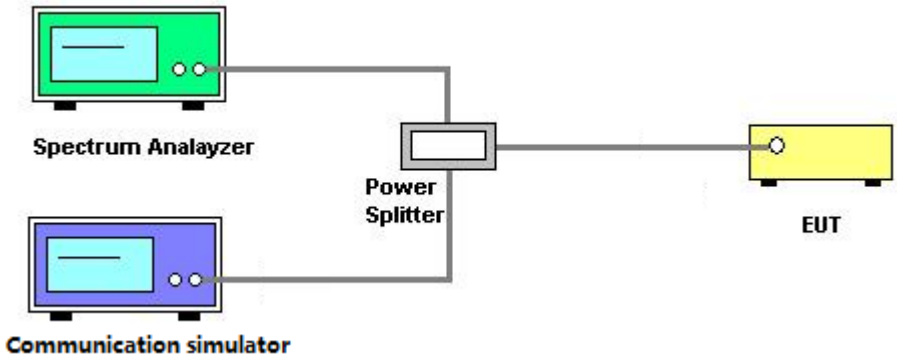

4.3.4 TEST DEVIATION

No deviation

4.3.5 TEST RESULTS

Please refer to the APPENDIX C.

4.4 RADIATED SPURIOUS EMISSIONS MEASUREMENT

4.4.1 LIMIT

The power of any emission outside of theauthorized operating frequency ranges must be attenuated below the transmitting power (P) by a factorof at least 43 + 10 log(P) dB. The emission limit equal to -13dBm.

E (dBμV/m) = EIRP (dBm) - 20 log D + 104.8; where D is the measurement distance in meters. The emission limit equal to 82.26dBμV/m.

4.4.2 TEST PROCEDURES

The testing follows FCC KDB 971168 v03r01 Section 6.2 or ANSI C63.26-2015 Section 5.5.

1. The EUT was placed on a turntable with 0.8 meter height for frequency below 1GHz and 1.5 meter height for frequency above 1GHz respectively above ground.
2. The EUT was set 3 meters from the receiving antenna mounted on the antenna tower.
3. During the measurement, the system simulator parameters were set to force the EUT transmitting at maximum output power.
4. Start the test, rotate the table 360° to find the worst Angle, maintain the worst Angle, raise the antenna to 1-4m to find the worst height, maintain the worst height, then rotate the table to determine the final worst Angle, grab the spectrum diagram.
5. EUT shall be placed in accordance with X,Y,Z as required by Figure 5 in ANSI C63.26. Repeat Step 5 above to find the worst placement. Test all bands according to the worst placement.
6. Then EIRP is then converted to field strength as follows in Equation
7. E (dBuV/m) = EIRP (dBm) - 20log(D) + 104.8; where D is the measurement distance (in the far field region) in m.The emission limit equal to 82.26dBuV/m.

4.4.3 TEST SETUP LAYOUT

Below 30MHz

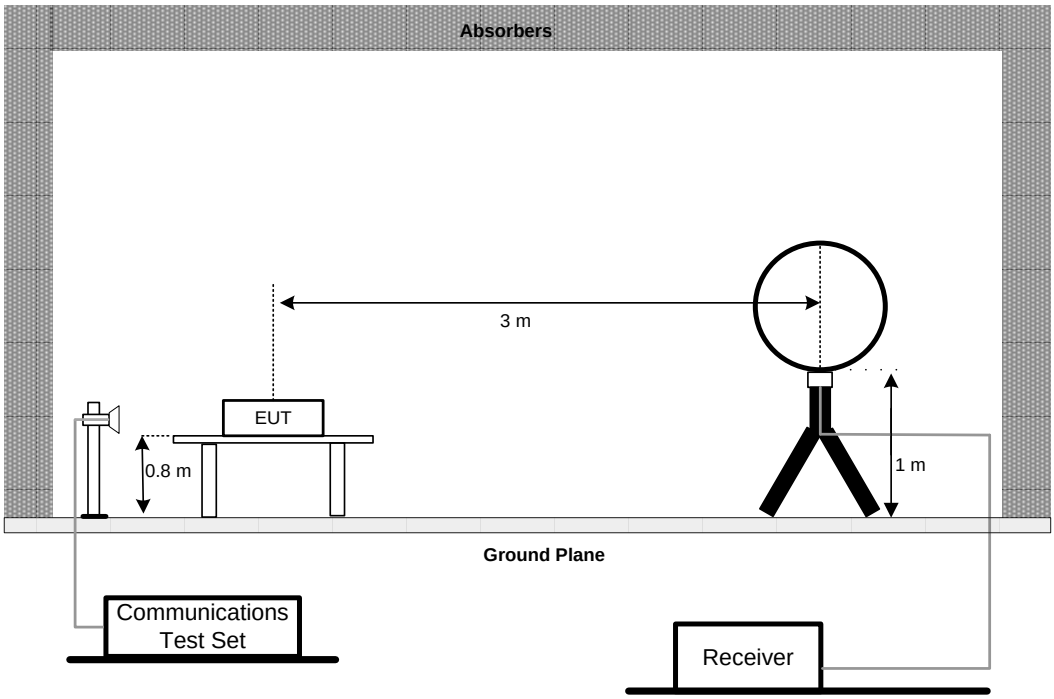

30MHz to 1GHz

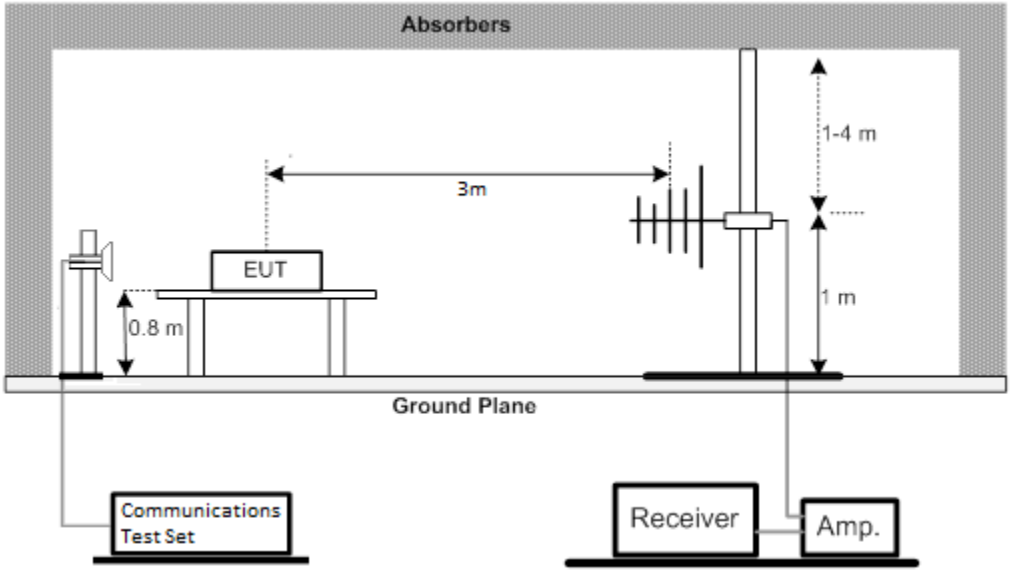

Above 1GHz

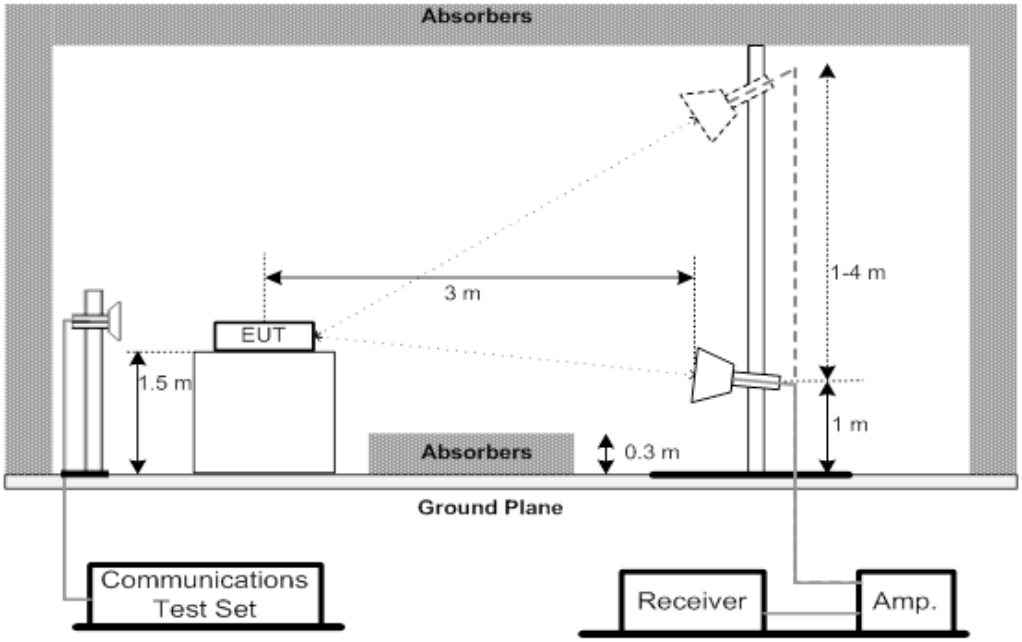

4.4.4 TEST RESULTS (9KHZ TO 30MHZ)

Please refer to the APPENDIX D.

4.4.5 TEST RESULTS (30MHZ TO 1000MHZ)

Please refer to the APPENDIX E.

4.4.6 TEST RESULTS (ABOVE 1000MHZ)

Please refer to the APPENDIX F.

4.5 BAND EDGE MEASUREMENT

4.5.1 LIMIT

For mobile operations in the 3450-3550 MHz band, the conducted power of any emission outside the licensee's authorized bandwidth shall not exceed -13 dBm/MHz.

4.5.2 TEST PROCEDURES

The testing follows FCC KDB 971168 v03r01 Section 6 or ANSI C63.26-2015 Section 5.7.

1. All measurements were done at low and high operational frequency range.
2. Measurement instrumentation employing a resolution bandwidth of 1 megahertz or greater. However, in the 1 megahertz bands immediately outside and adjacent to the licensee's frequency block, a resolution bandwidth of at least one percent of the emission bandwidth of the fundamental emission of the transmitter may be employed, but limited to a maximum of 200 kHz. In the bands between 1 and 5 MHz removed from the licensee's frequency block, the minimum resolution bandwidth for the measurement shall be 500 kHz.
3. Record the max trace plot into the test report.

4.5.3 TEST SETUP LAYOUT

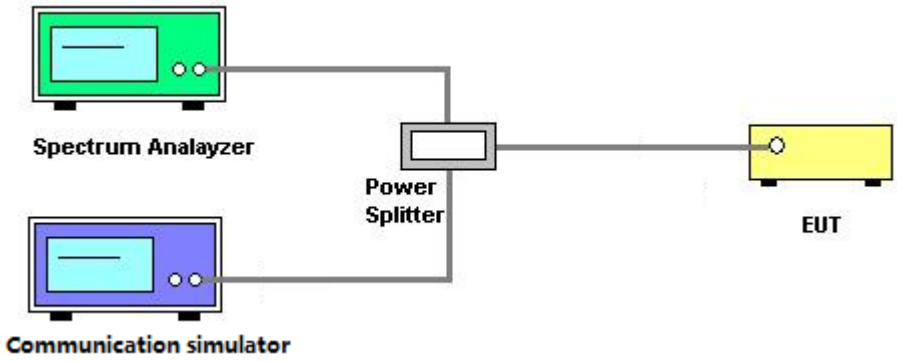

4.5.4 TEST DEVIATION

No deviation

4.5.5 TEST RESULTS

Please refer to the APPENDIX G.

4.6 PEAK TO AVERAGE RATIO MEASUREMENT

4.6.1 LIMIT

In measuring transmissions in this band using an average power technique, the peak to-average ratio (PAR) of the transmission may not exceed 13 dB.

4.6.2 TEST PROCEDURES

The testing follows FCC KDB 971168 v03r01 Section 5.7 or ANSI C63.26-2015 Section 5.2.6.

1. Set resolution/measurement bandwidth ≥ signal's occupied bandwidth;
2. Set the number of counts to a value that stabilizes the measured CCDF curve;
3. Record the maximum PAPR level associated with a probability of 0.1%.

4.6.3 TEST SETUP LAYOUT

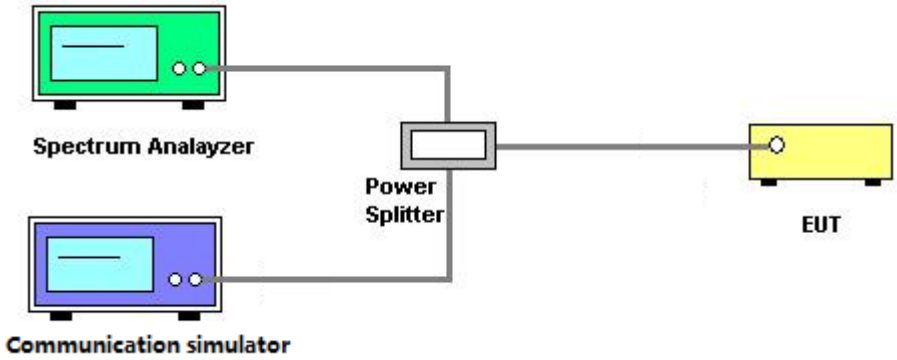

4.6.4 TEST DEVIATION

No deviation

4.6.5 TEST RESULTS

Please refer to the APPENDIX H.

4.7 FREQUENCY STABILITY MEASUREMENT

4.7.1 LIMIT

The frequency stability shall be sufficient to ensure that the fundamental emission stays within the authorized frequency block.

4.7.2 TEST PROCEDURES

The testing follows KDB 971168 v03r01 Section 9 or ANSI C63.26-2015 Section 5.6.

1. A reference point shall be established at the applicable unwanted emissions limit using a RBW equal to the RBW required by the unwantedemissions specification of the applicable regulatory standard. These reference points measuredusing the lowest and highest channel of operation shall be identified as f L and f H respectively. The worst-case frequency offset determined in the above methods shall be added or subtracted from the values of f L and f H and the resulting frequencies must remain within the band.
2. The EUT was set up in the thermal chamber and connected with the system simulator.
3. With power OFF, the temperature was decreased to -30°C and the EUT was stabilized before testing. Power was applied and the maximum change in frequency was recorded within one minute.
4. With power OFF, the temperature was raised in 10°C step up to 50°C. The EUT was stabilized at each step for at least half an hour. Power was applied and the maximum frequency change was recorded within one minute.

4.7.3 TEST SETUP LAYOUT

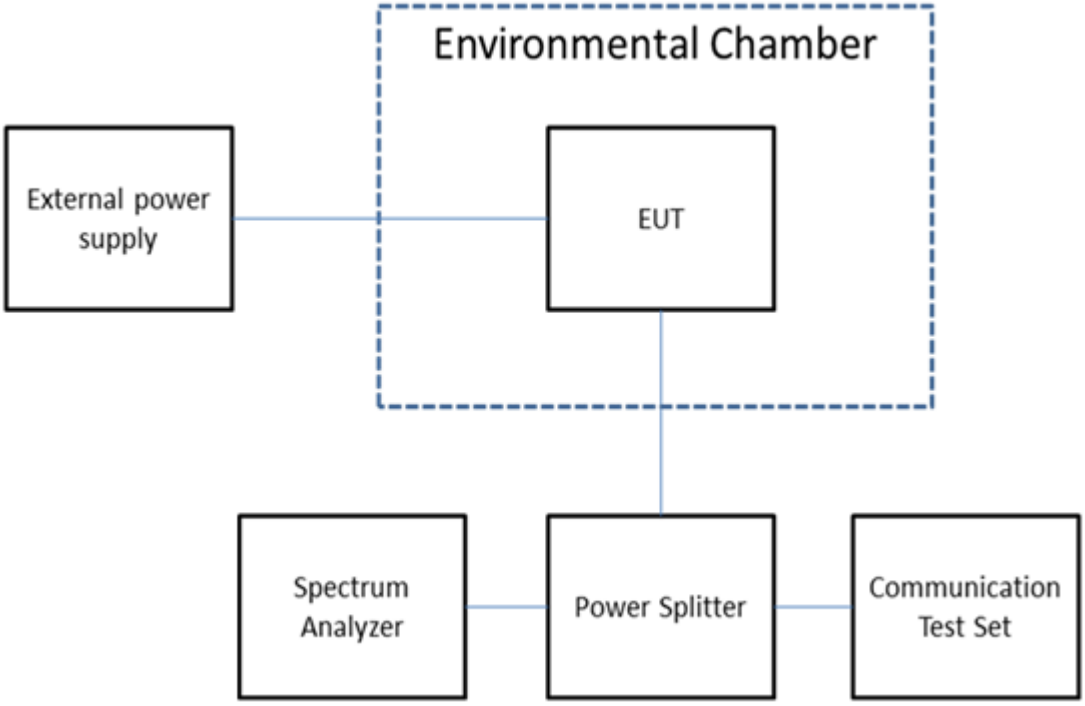

4.7.4 TEST DEVIATION

No deviation

4.7.5 TEST RESULTS

Please refer to the APPENDIX I.

4. LIST OF MEASUREMENT EQUIPMENTS

Radiated Emissions - 9 kHz to 30 MHz					
Item	Kind of Equipment	Manufacturer	Type No.	Serial No.	Calibrated until
1	Active Loop Antenna	Schwarzbeck	FMZB 1513-60	1513-60-025	Apr. 01, 2024
2	MXE EMI Receiver	Keysight	N9038A	MY59050118	Feb. 10, 2024
3	Cable	EMC INSTRUMENT	EMCCFD400-NM-NM-3000	N/A	Jun. 08, 2024
4	Cable	EMC INSTRUMENT	EMCCFD400-NM-NM-7000	N/A	Jun. 08, 2024
5	Measurement Software	Farad	EZ-EMC Ver.NB-03A1-01	N/A	N/A
6	966 Chamber room	Maorui	9*6*6 (NSA&VSWR)	N/A	Jun. 02, 2024

Radiated Emissions - 30 MHz to 1 GHz					
Item	Kind of Equipment	Manufacturer	Type No.	Serial No.	Calibrated until
1	Trilog-Broadband Antenna	Schwarzbeck	VULB9168	01269	May 15, 2024
2	Attenuator	EMC INSTRUMENT	EMCI-N-6-06	AN-N0697	May 15, 2024
3	Preamplifier	EMC INSTRUMENT	EMC001330	4585/5/27	Feb. 10, 2024
4	Cable	EMC INSTRUMENT	EMCCFD400-NM-NM-2500	N/A	Jun. 08, 2024
5	Cable	EMC INSTRUMENT	EMCCFD400-NM-NM-7000	N/A	Jun. 08, 2024
6	Cable	EMC INSTRUMENT	EMCCFD400-NM-NM-3000	N/A	Jun. 08, 2024
7	MXE EMI Receiver	KEYSIGHT	N9038A	MY59050118	Feb. 10, 2024
8	Positioning Controller	MF	MF-7802BS	N/A	N/A
9	Max-Full Antenna Corp	MF	MFA-560BSN	N/A	N/A
10	Measurement Software	Farad	EZ-EMC Ver.NB-03A1-01	N/A	N/A
11	5G Wireless Test Platform	Starpoint	SP9500	SP9500-20335	Feb. 10, 2024
12	Attenuator	Talent Microwave	TA10A2-S-18	N/A	N/A
13	966 Chamber room	Maorui	9*6*6 (NSA&VSWR)	N/A	Jun. 02, 2024

Radiated Emissions - Above 1 GHz					
Item	Kind of Equipment	Manufacturer	Type No.	Serial No.	Calibrated until
1	MXE EMI Receiver	Keysight	N9038A	MY59050118	Feb. 10, 2024
2	Measurement Software	Farad	EZ-EMC Ver.NB-03A1-01	N/A	N/A
3	Preamplifier	EMC INSTRUMENT	EMC118A45SE	980739	Feb. 10, 2024
4	Cable	EMC INSTRUMENT	EMC104-SM-SM-10000	N/A	Jun. 08, 2024
5	Cable	EMC INSTRUMENT	EMC104-SM-SM-3000	N/A	Jun. 08, 2024
6	Cable	EMC INSTRUMENT	EMC104-SM-SM-800	N/A	Jun. 08, 2024
7	5G Wireless Test Platform	Starpoint	SP9500	SP9500-20335	Feb. 10, 2024
8	Attenuator	Talent Microwave	TA10A2-S-18	N/A	N/A
9	Broad-Band Horn Antenna	Schwarzbeck	BBHA9170	1046	Jul. 05, 2024
10	966 Chamber room	Maorui	9*6*6（NSA&VSWR）	N/A	Jun. 02, 2024

Conducted Measurement					
Item	Kind of Equipment	Manufacturer	Type No.	Serial No.	Calibrated until
1	Signal Analyzer	R&S	FSV 40	100948	Jul. 07, 2024
2	MXA Signal Analyzer	Agilent Technologies	N9020A	MY49100060	Jul. 07, 2024
3	Temperature Chamber	ESPEC	SU-242	93018791	Jul. 07, 2024
4	Power Splitter	NA	ZN2PD2-14W-S+	SF654501927	Feb. 10, 2024
5	Radio Communication Test Station	Anritsu	MT8000A	6261867313	Feb. 11, 2024
6	Measurement Software	Anritsu	UCTS Signaling Ver6.22.121299	N/A	N/A
7	Cable	N/A	RWP50-4.6A-S MSM-1	N/A	N/A
8	5G Wireless Test Platform	Star Point	SP9500	SP9500-20335	Feb. 11, 2024
9	DC POWER SUPPLY	ITECH	IT6332C	8034160117673300	May 10, 2024

Remark: ”N/A” denotes no model name, serial no. or calibration specified.
All calibration period of equipment list is one year.

5. EUT TEST PHOTO

Radiated Emissions Test Photos

9 kHz to 30 MHz

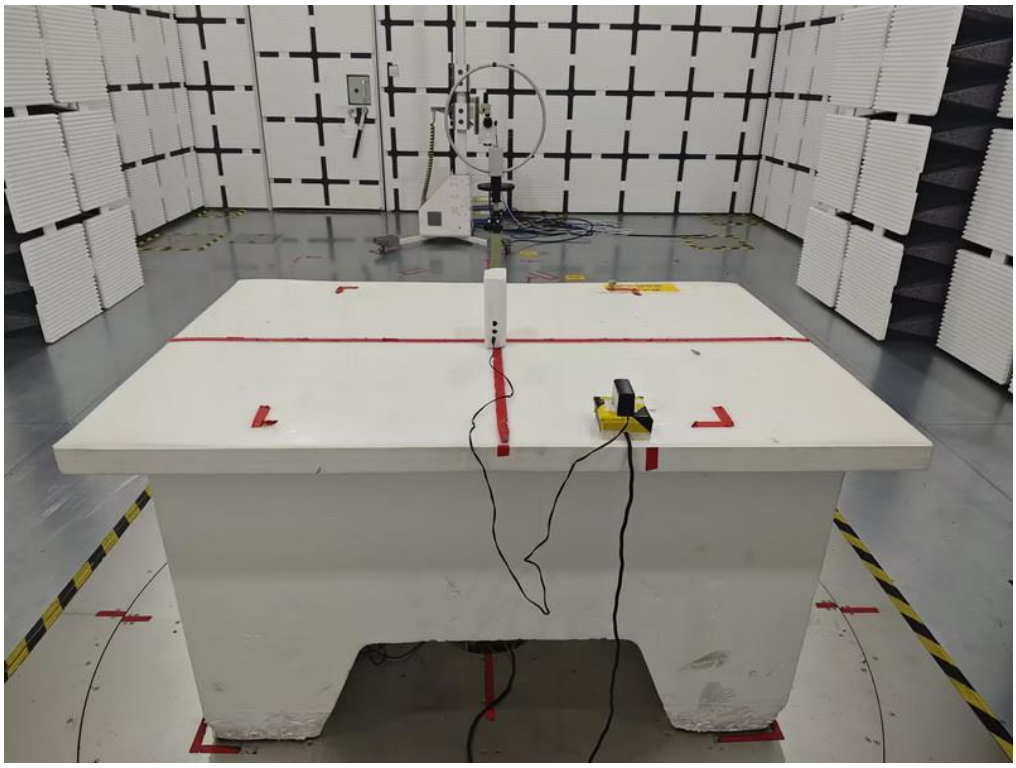

Radiated Emissions Test Photos

30 MHz to 1 GHz

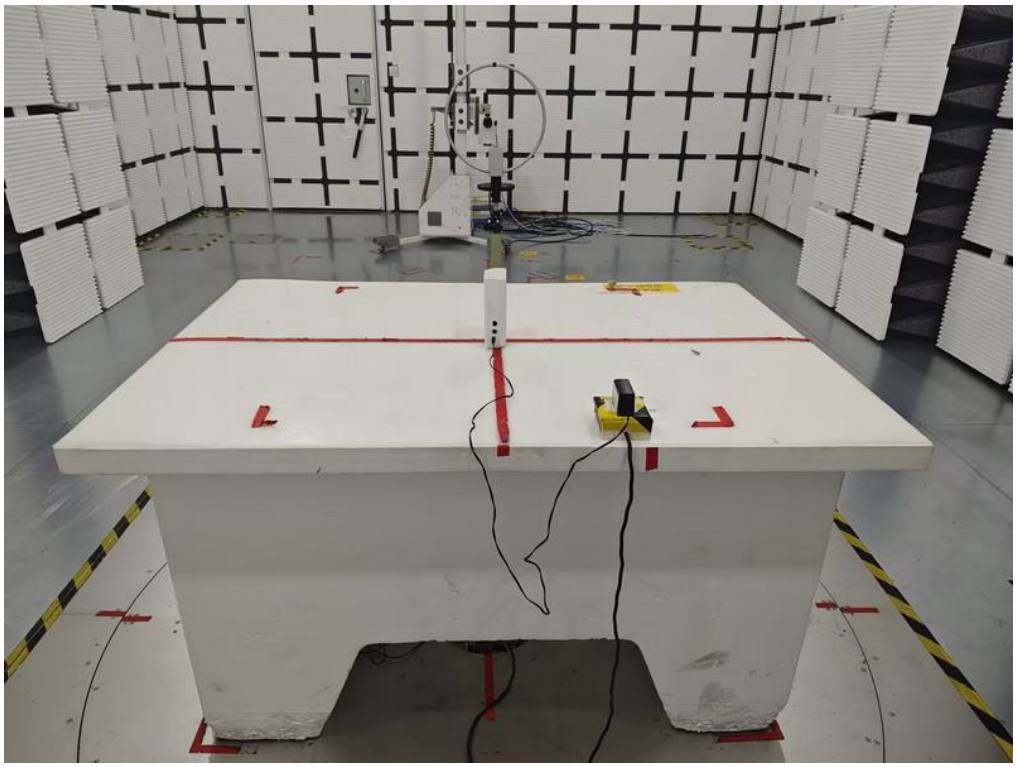

Radiated Emissions Test Photos

Above 1 GHz

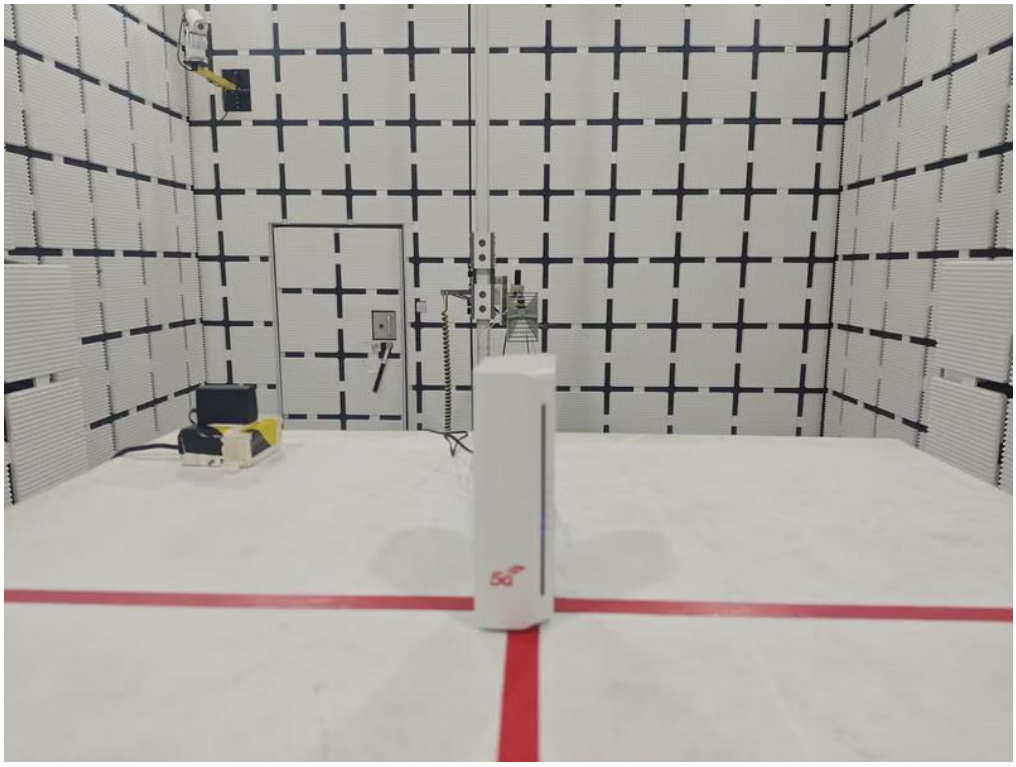

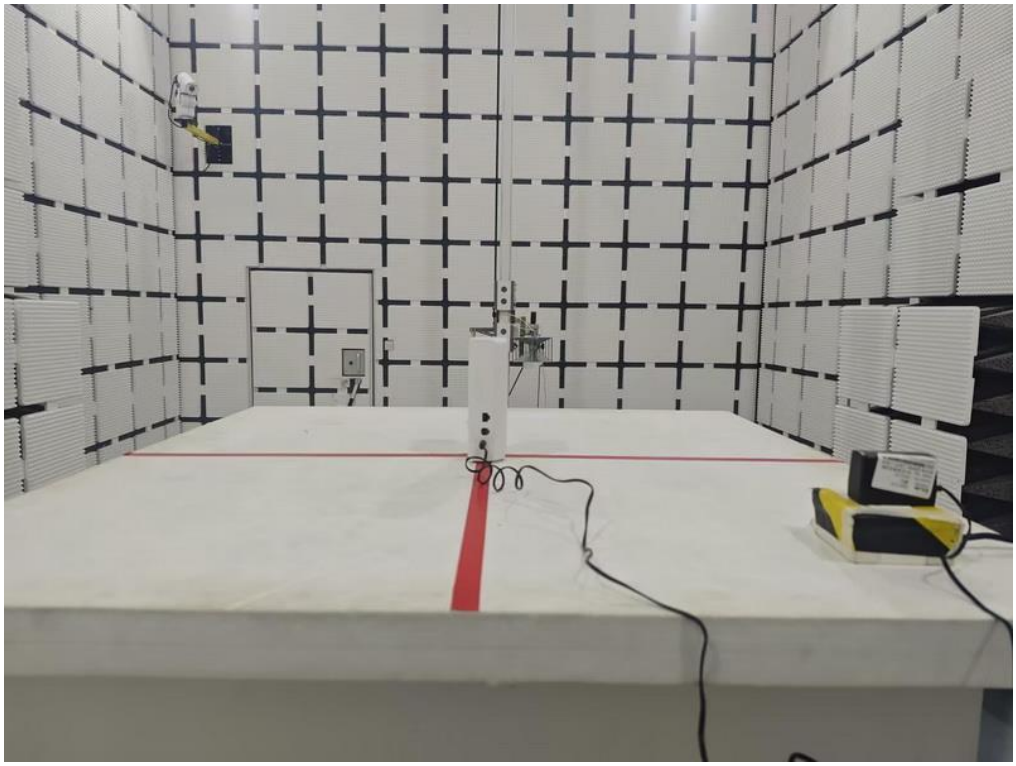

APPENDIX A - OUTPUT POWER

For SA n77

Band	Channel	Cell Power	Test Item	Measured Value	EIRP
n77	630334	-57	2.1046 RF power output:n77_10MHz_30kHz_630334;1;DFT-s-OFDM PI/2 BPSK^Inner_1RB_Left:PC2	25.07	27.82
n77	630334	-57	2.1046 RF power output:n77_10MHz_30kHz_630334;2;DFT-s-OFDM PI/2 BPSK^Inner_1RB_Right:PC2	25.3	28.05
n77	630334	-57	2.1046 RF power output:n77_10MHz_30kHz_630334;3;DFT-s-OFDM PI/2 BPSK^Inner_Full:PC2	25.33	28.08
n77	630334	-57	2.1046 RF power output:n77_10MHz_30kHz_630334;4;DFT-s-OFDM PI/2 BPSK^Edge_1RB_Left:PC2	22.79	25.54
n77	630334	-57	2.1046 RF power output:n77_10MHz_30kHz_630334;5;DFT-s-OFDM PI/2 BPSK^Edge_1RB_Right:PC2	23.05	25.8
n77	630334	-57	2.1046 RF power output:n77_10MHz_30kHz_630334;6;DFT-s-OFDM PI/2 BPSK^Outer_Full:PC2	24.78	27.53
n77	630334	-57	2.1046 RF power output:n77_10MHz_30kHz_630334;7;DFT-s-OFDM QPSK^Inner_1RB_Left:PC2	25.06	27.81
n77	630334	-57	2.1046 RF power output:n77_10MHz_30kHz_630334;8;DFT-s-OFDM QPSK^Inner_1RB_Right:PC2	25.28	28.03
n77	630334	-57	2.1046 RF power output:n77_10MHz_30kHz_630334;9;DFT-s-OFDM QPSK^Inner_Full:PC2	25.3	28.05
n77	630334	-57	2.1046 RF power output:n77_10MHz_30kHz_630334;10;DFT-s-OFDM QPSK^Edge_1RB_Left:PC2	22.78	25.53
n77	630334	-57	2.1046 RF power output:n77_10MHz_30kHz_630334;11;DFT-s-OFDM QPSK^Edge_1RB_Right:PC2	23.05	25.8
n77	630334	-57	2.1046 RF power output:n77_10MHz_30kHz_630334;12;DFT-s-OFDM QPSK^Outer_Full:PC2	23.97	26.72
n77	630334	-57	2.1046 RF power output:n77_10MHz_30kHz_630334;13;DFT-s-OFDM 16QAM^Inner_1RB_Left:PC2	23.75	26.5
n77	630334	-57	2.1046 RF power output:n77_10MHz_30kHz_630334;14;DFT-s-OFDM 16QAM^Inner_1RB_Right:PC2	23.97	26.72
n77	630334	-57	2.1046 RF power output:n77_10MHz_30kHz_630334;15;DFT-s-OFDM 16QAM^Inner_Full:PC2	24.01	26.76
n77	630334	-57	2.1046 RF power output:n77_10MHz_30kHz_630334;16;DFT-s-OFDM 16QAM^Edge_1RB_Left:PC2	22.76	25.51
n77	630334	-57	2.1046 RF power output:n77_10MHz_30kHz_630334;17;DFT-s-OFDM 16QAM^Edge_1RB_Right:PC2	23.02	25.77
n77	630334	-57	2.1046 RF power output:n77_10MHz_30kHz_630334;18;DFT-s-OFDM 16QAM^Outer_Full:PC2	22.96	25.71
n77	630334	-57	2.1046 RF power output:n77_10MHz_30kHz_630334;19;DFT-s-OFDM 64QAM^Inner_1RB_Left:PC2	22.9	25.65
n77	630334	-57	2.1046 RF power output:n77_10MHz_30kHz_630334;20;DFT-s-OFDM 64QAM^Inner_1RB_Right:PC2	23.13	25.88
n77	630334	-57	2.1046 RF power output:n77_10MHz_30kHz_630334;21;DFT-s-OFDM 64QAM^Inner_Full:PC2	23.05	25.8
n77	630334	-57	2.1046 RF power output:n77_10MHz_30kHz_630334;22;DFT-s-OFDM 64QAM^Edge_1RB_Left:PC2	22.88	25.63
n77	630334	-57	2.1046 RF power output:n77_10MHz_30kHz_630334;23;DFT-s-OFDM 64QAM^Edge_1RB_Right:PC2	23.14	25.89
n77	630334	-57	2.1046 RF power output:n77_10MHz_30kHz_630334;24;DFT-s-OFDM 64QAM^Outer_Full:PC2	22.47	25.22
n77	630334	-57	2.1046 RF power output:n77_10MHz_30kHz_630334;25;DFT-s-OFDM 256QAM^Inner_1RB_Left:PC2	20.22	22.97
n77	630334	-57	2.1046 RF power output:n77_10MHz_30kHz_630334;26;DFT-s-OFDM 256QAM^Inner_1RB_Right:PC2	20.46	23.21
n77	630334	-57	2.1046 RF power output:n77_10MHz_30kHz_630334;27;DFT-s-OFDM 256QAM^Inner_Full:PC2	20.72	23.47
n77	630334	-57	2.1046 RF power output:n77_10MHz_30kHz_630334;28;DFT-s-OFDM 256QAM^Edge_1RB_Left:PC2	20.2	22.95
n77	630334	-57	2.1046 RF power output:n77_10MHz_30kHz_630334;29;DFT-s-OFDM 256QAM^Edge_1RB_Right:PC2	20.47	23.22
n77	630334	-57	2.1046 RF power output:n77_10MHz_30kHz_630334;30;DFT-s-OFDM 256QAM^Outer_Full:PC2	20.08	22.83
n77	630334	-57	2.1046 RF power output:n77_10MHz_30kHz_630334;31;CP-OFDM QPSK^Inner_1RB_Left:PC2	23.24	25.99
n77	630334	-57	2.1046 RF power output:n77_10MHz_30kHz_630334;32;CP-OFDM QPSK^Inner_1RB_Right:PC2	23.44	26.19
n77	630334	-57	2.1046 RF power output:n77_10MHz_30kHz_630334;33;CP-OFDM QPSK^Inner_Full:PC2	23.5	26.25
n77	630334	-57	2.1046 RF power output:n77_10MHz_30kHz_630334;34;CP-OFDM QPSK^Edge_1RB_Left:PC2	21.96	24.71
n77	630334	-57	2.1046 RF power output:n77_10MHz_30kHz_630334;35;CP-OFDM QPSK^Edge_1RB_Right:PC2	22.25	25
n77	630334	-57	2.1046 RF power output:n77_10MHz_30kHz_630334;36;CP-OFDM QPSK^Outer_Full:PC2	22.23	24.98
n77	630334	-57	2.1046 RF power output:n77_10MHz_30kHz_630334;37;CP-OFDM 16QAM^Inner_1RB_Left:PC2	22.91	25.66
n77	630334	-57	2.1046 RF power output:n77_10MHz_30kHz_630334;38;CP-OFDM 16QAM^Inner_1RB_Right:PC2	23.14	25.89
n77	630334	-57	2.1046 RF power output:n77_10MHz_30kHz_630334;39;CP-OFDM 16QAM^Inner_Full:PC2	22.99	25.74
n77	630334	-57	2.1046 RF power output:n77_10MHz_30kHz_630334;40;CP-OFDM 16QAM^Edge_1RB_Left:PC2	22.9	25.65
n77	630334	-57	2.1046 RF power output:n77_10MHz_30kHz_630334;41;CP-OFDM 16QAM^Edge_1RB_Right:PC2	23.14	25.89
n77	630334	-57	2.1046 RF power output:n77_10MHz_30kHz_630334;42;CP-OFDM 16QAM^Outer_Full:PC2	22.19	24.94
n77	630334	-57	2.1046 RF power output:n77_10MHz_30kHz_630334;43;CP-OFDM 64QAM^Inner_1RB_Left:PC2	22.48	25.23
n77	630334	-57	2.1046 RF power output:n77_10MHz_30kHz_630334;44;CP-OFDM 64QAM^Inner_1RB_Right:PC2	22.7	25.45
n77	630334	-57	2.1046 RF power output:n77_10MHz_30kHz_630334;45;CP-OFDM 64QAM^Inner_Full:PC2	22.52	25.27
n77	630334	-57	2.1046 RF power output:n77_10MHz_30kHz_630334;46;CP-OFDM 64QAM^Edge_1RB_Left:PC2	22.43	25.18
n77	630334	-57	2.1046 RF power output:n77_10MHz_30kHz_630334;47;CP-OFDM 64QAM^Edge_1RB_Right:PC2	22.7	25.45
n77	630334	-57	2.1046 RF power output:n77_10MHz_30kHz_630334;48;CP-OFDM 64QAM^Outer_Full:PC2	21.72	24.47
n77	630334	-57	2.1046 RF power output:n77_10MHz_30kHz_630334;49;CP-OFDM 256QAM^Inner_1RB_Left:PC2	18.21	20.96
n77	630334	-57	2.1046 RF power output:n77_10MHz_30kHz_630334;50;CP-OFDM 256QAM^Inner_1RB_Right:PC2	18.44	21.19
n77	630334	-57	2.1046 RF power output:n77_10MHz_30kHz_630334;51;CP-OFDM 256QAM^Inner_Full:PC2	18.57	21.32
n77	630334	-57	2.1046 RF power output:n77_10MHz_30kHz_630334;52;CP-OFDM 256QAM^Edge_1RB_Left:PC2	18.16	20.91
n77	630334	-57	2.1046 RF power output:n77_10MHz_30kHz_630334;53;CP-OFDM 256QAM^Edge_1RB_Right:PC2	18.46	21.21
n77	630334	-57	2.1046 RF power output:n77_10MHz_30kHz_630334;54;CP-OFDM 256QAM^Outer_Full:PC2	18.25	21
n77	633334	-57	2.1046 RF power output:n77_10MHz_30kHz_633334;1;DFT-s-OFDM PI/2 BPSK^Inner_1RB_Left:PC2	25.45	28.2
n77	633334	-57	2.1046 RF power output:n77_10MHz_30kHz_633334;2;DFT-s-OFDM PI/2 BPSK^Inner_1RB_Right:PC2	25.14	27.89
n77	633334	-57	2.1046 RF power output:n77_10MHz_30kHz_633334;3;DFT-s-OFDM PI/2 BPSK^Inner_Full:PC2	25.49	28.24
n77	633334	-57	2.1046 RF power output:n77_10MHz_30kHz_633334;4;DFT-s-OFDM PI/2 BPSK^Edge_1RB_Left:PC2	23.25	26
n77	633334	-57	2.1046 RF power output:n77_10MHz_30kHz_633334;5;DFT-s-OFDM PI/2 BPSK^Edge_1RB_Right:PC2	22.94	25.69
n77	633334	-57	2.1046 RF power output:n77_10MHz_30kHz_633334;6;DFT-s-OFDM PI/2 BPSK^Outer_Full:PC2	24.95	27.7
n77	633334	-57	2.1046 RF power output:n77_10MHz_30kHz_633334;7;DFT-s-OFDM QPSK^Inner_1RB_Left:PC2	25.46	28.21
n77	633334	-57	2.1046 RF power output:n77_10MHz_30kHz_633334;8;DFT-s-OFDM QPSK^Inner_1RB_Right:PC2	25.15	27.9
n77	633334	-57	2.1046 RF power output:n77_10MHz_30kHz_633334;9;DFT-s-OFDM QPSK^Inner_Full:PC2	25.45	28.2
n77	633334	-57	2.1046 RF power output:n77_10MHz_30kHz_633334;10;DFT-s-OFDM QPSK^Edge_1RB_Left:PC2	23.28	26.03
n77	633334	-57	2.1046 RF power output:n77_10MHz_30kHz_633334;11;DFT-s-OFDM QPSK^Edge_1RB_Right:PC2	22.98	25.73
n77	633334	-57	2.1046 RF power output:n77_10MHz_30kHz_633334;12;DFT-s-OFDM QPSK^Outer_Full:PC2	24.25	27
n77	633334	-57	2.1046 RF power output:n77_10MHz_30kHz_633334;13;DFT-s-OFDM 16QAM^Inner_1RB_Left:PC2	24.31	27.06
n77	633334	-57	2.1046 RF power output:n77_10MHz_30kHz_633334;14;DFT-s-OFDM 16QAM^Inner_1RB_Right:PC2	24.01	26.76
n77	633334	-57	2.1046 RF power output:n77_10MHz_30kHz_633334;15;DFT-s-OFDM 16QAM^Inner_Full:PC2	24.31	27.06
n77	633334	-57	2.1046 RF power output:n77_10MHz_30kHz_633334;16;DFT-s-OFDM 16QAM^Edge_1RB_Left:PC2	23.27	26.02
n77	633334	-57	2.1046 RF power output:n77_10MHz_30kHz_633334;17;DFT-s-OFDM 16QAM^Edge_1RB_Right:PC2	22.97	25.72
n77	633334	-57	2.1046 RF power output:n77_10MHz_30kHz_633334;18;DFT-s-OFDM 16QAM^Outer_Full:PC2	23.19	25.94
n77	633334	-57	2.1046 RF power output:n77_10MHz_30kHz_633334;19;DFT-s-OFDM 64QAM^Inner_1RB_Left:PC2	23.26	26.01
n77	633334	-57	2.1046 RF power output:n77_10MHz_30kHz_633334;20;DFT-s-OFDM 64QAM^Inner_1RB_Right:PC2	22.96	25.71
n77	633334	-57	2.1046 RF power output:n77_10MHz_30kHz_633334;21;DFT-s-OFDM 64QAM^Inner_Full:PC2	23.27	26.02
n77	633334	-57	2.1046 RF power output:n77_10MHz_30kHz_633334;22;DFT-s-OFDM 64QAM^Edge_1RB_Left:PC2	23.25	26
n77	633334	-57	2.1046 RF power output:n77_10MHz_30kHz_633334;23;DFT-s-OFDM 64QAM^Edge_1RB_Right:PC2	22.94	25.69
n77	633334	-57	2.1046 RF power output:n77_10MHz_30kHz_633334;24;DFT-s-OFDM 64QAM^Outer_Full:PC2	22.71	25.46
n77	633334	-57	2.1046 RF power output:n77_10MHz_30kHz_633334;25;DFT-s-OFDM 256QAM^Inner_1RB_Left:PC2	20.56	23.31
n77	633334	-57	2.1046 RF power output:n77_10MHz_30kHz_633334;26;DFT-s-OFDM 256QAM^Inner_1RB_Right:PC2	20.27	23.02
n77	633334	-57	2.1046 RF power output:n77_10MHz_30kHz_633334;27;DFT-s-OFDM 256QAM^Inner_Full:PC2	20.83	23.58
n77	633334	-57	2.1046 RF power output:n77_10MHz_30kHz_633334;28;DFT-s-OFDM 256QAM^Edge_1RB_Left:PC2	20.55	23.3
n77	633334	-57	2.1046 RF power output:n77_10MHz_30kHz_633334;29;DFT-s-OFDM 256QAM^Edge_1RB_Right:PC2	20.24	22.99
n77	633334	-57	2.1046 RF power output:n77_10MHz_30kHz_633334;30;DFT-s-OFDM 256QAM^Outer_Full:PC2	20.13	22.88
n77	633334	-57	2.1046 RF power output:n77_10MHz_30kHz_633334;31;CP-OFDM QPSK^Inner_1RB_Left:PC2	23.78	26.53
n77	633334	-57	2.1046 RF power output:n77_10MHz_30kHz_633334;32;CP-OFDM QPSK^Inner_1RB_Right:PC2	23.48	26.23
n77	633334	-57	2.1046 RF power output:n77_10MHz_30kHz_633334;33;CP-OFDM QPSK^Inner_Full:PC2	23.84	26.59
n77	633334	-57	2.1046 RF power output:n77_10MHz_30kHz_633334;34;CP-OFDM QPSK^Edge_1RB_Left:PC2	22.29	25.04

Band	Channel	Cell Power	Test Item	Measured Value	EIRP
n77	633334	-57	2.1046 RF power output:n77_10MHz_30kHz_633334;35;CP-OFDM QPSK^Edge_1RB_Right:PC2	22.01	24.76
n77	633334	-57	2.1046 RF power output:n77_10MHz_30kHz_633334;36;CP-OFDM QPSK^Outer_Full:PC2	22.3	25.05
n77	633334	-57	2.1046 RF power output:n77_10MHz_30kHz_633334;37;CP-OFDM 16QAM^Inner_1RB_Left:PC2	23.44	26.19
n77	633334	-57	2.1046 RF power output:n77_10MHz_30kHz_633334;38;CP-OFDM 16QAM^Inner_1RB_Right:PC2	23.13	25.88
n77	633334	-57	2.1046 RF power output:n77_10MHz_30kHz_633334;39;CP-OFDM 16QAM^Inner_Full:PC2	23.26	26.01
n77	633334	-57	2.1046 RF power output:n77_10MHz_30kHz_633334;40;CP-OFDM 16QAM^Edge_1RB_Left:PC2	23.41	26.16
n77	633334	-57	2.1046 RF power output:n77_10MHz_30kHz_633334;41;CP-OFDM 16QAM^Edge_1RB_Right:PC2	23.12	25.87
n77	633334	-57	2.1046 RF power output:n77_10MHz_30kHz_633334;42;CP-OFDM 16QAM^Outer_Full:PC2	22.23	24.98
n77	633334	-57	2.1046 RF power output:n77_10MHz_30kHz_633334;43;CP-OFDM 64QAM^Inner_1RB_Left:PC2	22.92	25.67
n77	633334	-57	2.1046 RF power output:n77_10MHz_30kHz_633334;44;CP-OFDM 64QAM^Inner_1RB_Right:PC2	22.7	25.45
n77	633334	-57	2.1046 RF power output:n77_10MHz_30kHz_633334;45;CP-OFDM 64QAM^Inner_Full:PC2	22.77	25.52
n77	633334	-57	2.1046 RF power output:n77_10MHz_30kHz_633334;46;CP-OFDM 64QAM^Edge_1RB_Left:PC2	22.99	25.74
n77	633334	-57	2.1046 RF power output:n77_10MHz_30kHz_633334;47;CP-OFDM 64QAM^Edge_1RB_Right:PC2	22.6	25.35
n77	633334	-57	2.1046 RF power output:n77_10MHz_30kHz_633334;48;CP-OFDM 64QAM^Outer_Full:PC2	21.9	24.65
n77	633334	-57	2.1046 RF power output:n77_10MHz_30kHz_633334;49;CP-OFDM 256QAM^Inner_1RB_Left:PC2	18.53	21.28
n77	633334	-57	2.1046 RF power output:n77_10MHz_30kHz_633334;50;CP-OFDM 256QAM^Inner_1RB_Right:PC2	18.23	20.98
n77	633334	-57	2.1046 RF power output:n77_10MHz_30kHz_633334;51;CP-OFDM 256QAM^Inner_Full:PC2	18.7	21.45
n77	633334	-57	2.1046 RF power output:n77_10MHz_30kHz_633334;52;CP-OFDM 256QAM^Edge_1RB_Left:PC2	18.51	21.26
n77	633334	-57	2.1046 RF power output:n77_10MHz_30kHz_633334;53;CP-OFDM 256QAM^Edge_1RB_Right:PC2	18.23	20.98
n77	633334	-57	2.1046 RF power output:n77_10MHz_30kHz_633334;54;CP-OFDM 256QAM^Outer_Full:PC2	18.33	21.08
n77	636332	-57	2.1046 RF power output:n77_10MHz_30kHz_636332;1;DFT-s-OFDM PI/2 BPSK^Inner_1RB_Left:PC2	24.55	27.3
n77	636332	-57	2.1046 RF power output:n77_10MHz_30kHz_636332;2;DFT-s-OFDM PI/2 BPSK^Inner_1RB_Right:PC2	24.47	27.22
n77	636332	-57	2.1046 RF power output:n77_10MHz_30kHz_636332;3;DFT-s-OFDM PI/2 BPSK^Inner_Full:PC2	24.61	27.36
n77	636332	-57	2.1046 RF power output:n77_10MHz_30kHz_636332;4;DFT-s-OFDM PI/2 BPSK^Edge_1RB_Left:PC2	22.48	25.23
n77	636332	-57	2.1046 RF power output:n77_10MHz_30kHz_636332;5;DFT-s-OFDM PI/2 BPSK^Edge_1RB_Right:PC2	22.32	25.07
n77	636332	-57	2.1046 RF power output:n77_10MHz_30kHz_636332;6;DFT-s-OFDM PI/2 BPSK^Outer_Full:PC2	24.12	26.87
n77	636332	-57	2.1046 RF power output:n77_10MHz_30kHz_636332;7;DFT-s-OFDM QPSK^Inner_1RB_Left:PC2	24.67	27.42
n77	636332	-57	2.1046 RF power output:n77_10MHz_30kHz_636332;8;DFT-s-OFDM QPSK^Inner_1RB_Right:PC2	24.48	27.23
n77	636332	-57	2.1046 RF power output:n77_10MHz_30kHz_636332;9;DFT-s-OFDM QPSK^Inner_Full:PC2	24.7	27.45
n77	636332	-57	2.1046 RF power output:n77_10MHz_30kHz_636332;10;DFT-s-OFDM QPSK^Edge_1RB_Left:PC2	22.4	25.15
n77	636332	-57	2.1046 RF power output:n77_10MHz_30kHz_636332;11;DFT-s-OFDM QPSK^Edge_1RB_Right:PC2	22.45	25.2
n77	636332	-57	2.1046 RF power output:n77_10MHz_30kHz_636332;12;DFT-s-OFDM QPSK^Outer_Full:PC2	23.55	26.3
n77	636332	-57	2.1046 RF power output:n77_10MHz_30kHz_636332;13;DFT-s-OFDM 16QAM^Inner_1RB_Left:PC2	23.53	26.28
n77	636332	-57	2.1046 RF power output:n77_10MHz_30kHz_636332;14;DFT-s-OFDM 16QAM^Inner_1RB_Right:PC2	23.46	26.21
n77	636332	-57	2.1046 RF power output:n77_10MHz_30kHz_636332;15;DFT-s-OFDM 16QAM^Inner_Full:PC2	23.57	26.32
n77	636332	-57	2.1046 RF power output:n77_10MHz_30kHz_636332;16;DFT-s-OFDM 16QAM^Edge_1RB_Left:PC2	22.5	25.25
n77	636332	-57	2.1046 RF power output:n77_10MHz_30kHz_636332;17;DFT-s-OFDM 16QAM^Edge_1RB_Right:PC2	22.44	25.19
n77	636332	-57	2.1046 RF power output:n77_10MHz_30kHz_636332;18;DFT-s-OFDM 16QAM^Outer_Full:PC2	22.37	25.12
n77	636332	-57	2.1046 RF power output:n77_10MHz_30kHz_636332;19;DFT-s-OFDM 64QAM^Inner_1RB_Left:PC2	22.33	25.08
n77	636332	-57	2.1046 RF power output:n77_10MHz_30kHz_636332;20;DFT-s-OFDM 64QAM^Inner_1RB_Right:PC2	22.35	25.1
n77	636332	-57	2.1046 RF power output:n77_10MHz_30kHz_636332;21;DFT-s-OFDM 64QAM^Inner_Full:PC2	22.44	25.19
n77	636332	-57	2.1046 RF power output:n77_10MHz_30kHz_636332;22;DFT-s-OFDM 64QAM^Edge_1RB_Left:PC2	22.43	25.18
n77	636332	-57	2.1046 RF power output:n77_10MHz_30kHz_636332;23;DFT-s-OFDM 64QAM^Edge_1RB_Right:PC2	22.26	25.01
n77	636332	-57	2.1046 RF power output:n77_10MHz_30kHz_636332;24;DFT-s-OFDM 64QAM^Outer_Full:PC2	22.01	24.76
n77	636332	-57	2.1046 RF power output:n77_10MHz_30kHz_636332;25;DFT-s-OFDM 256QAM^Inner_1RB_Left:PC2	19.7	22.45
n77	636332	-57	2.1046 RF power output:n77_10MHz_30kHz_636332;26;DFT-s-OFDM 256QAM^Inner_1RB_Right:PC2	19.79	22.54
n77	636332	-57	2.1046 RF power output:n77_10MHz_30kHz_636332;27;DFT-s-OFDM 256QAM^Inner_Full:PC2	20	22.75
n77	636332	-57	2.1046 RF power output:n77_10MHz_30kHz_636332;28;DFT-s-OFDM 256QAM^Edge_1RB_Left:PC2	19.7	22.45
n77	636332	-57	2.1046 RF power output:n77_10MHz_30kHz_636332;29;DFT-s-OFDM 256QAM^Edge_1RB_Right:PC2	19.64	22.39
n77	636332	-57	2.1046 RF power output:n77_10MHz_30kHz_636332;30;DFT-s-OFDM 256QAM^Outer_Full:PC2	19.35	22.1
n77	636332	-57	2.1046 RF power output:n77_10MHz_30kHz_636332;31;CP-OFDM QPSK^Inner_1RB_Left:PC2	22.99	25.74
n77	636332	-57	2.1046 RF power output:n77_10MHz_30kHz_636332;32;CP-OFDM QPSK^Inner_1RB_Right:PC2	22.8	25.55
n77	636332	-57	2.1046 RF power output:n77_10MHz_30kHz_636332;33;CP-OFDM QPSK^Inner_Full:PC2	23	25.75
n77	636332	-57	2.1046 RF power output:n77_10MHz_30kHz_636332;34;CP-OFDM QPSK^Edge_1RB_Left:PC2	21.5	24.25
n77	636332	-57	2.1046 RF power output:n77_10MHz_30kHz_636332;35;CP-OFDM QPSK^Edge_1RB_Right:PC2	21.38	24.13
n77	636332	-57	2.1046 RF power output:n77_10MHz_30kHz_636332;36;CP-OFDM QPSK^Outer_Full:PC2	21.5	24.25
n77	636332	-57	2.1046 RF power output:n77_10MHz_30kHz_636332;37;CP-OFDM 16QAM^Inner_1RB_Left:PC2	22.55	25.3
n77	636332	-57	2.1046 RF power output:n77_10MHz_30kHz_636332;38;CP-OFDM 16QAM^Inner_1RB_Right:PC2	22.47	25.22
n77	636332	-57	2.1046 RF power output:n77_10MHz_30kHz_636332;39;CP-OFDM 16QAM^Inner_Full:PC2	22.53	25.28
n77	636332	-57	2.1046 RF power output:n77_10MHz_30kHz_636332;40;CP-OFDM 16QAM^Edge_1RB_Left:PC2	22.54	25.29
n77	636332	-57	2.1046 RF power output:n77_10MHz_30kHz_636332;41;CP-OFDM 16QAM^Edge_1RB_Right:PC2	22.49	25.24
n77	636332	-57	2.1046 RF power output:n77_10MHz_30kHz_636332;42;CP-OFDM 16QAM^Outer_Full:PC2	21.44	24.19
n77	636332	-57	2.1046 RF power output:n77_10MHz_30kHz_636332;43;CP-OFDM 64QAM^Inner_1RB_Left:PC2	21.96	24.71
n77	636332	-57	2.1046 RF power output:n77_10MHz_30kHz_636332;44;CP-OFDM 64QAM^Inner_1RB_Right:PC2	21.88	24.63
n77	636332	-57	2.1046 RF power output:n77_10MHz_30kHz_636332;45;CP-OFDM 64QAM^Inner_Full:PC2	21.96	24.71
n77	636332	-57	2.1046 RF power output:n77_10MHz_30kHz_636332;46;CP-OFDM 64QAM^Edge_1RB_Left:PC2	21.95	24.7
n77	636332	-57	2.1046 RF power output:n77_10MHz_30kHz_636332;47;CP-OFDM 64QAM^Edge_1RB_Right:PC2	21.9	24.65
n77	636332	-57	2.1046 RF power output:n77_10MHz_30kHz_636332;48;CP-OFDM 64QAM^Outer_Full:PC2	21.11	23.86
n77	636332	-57	2.1046 RF power output:n77_10MHz_30kHz_636332;49;CP-OFDM 256QAM^Inner_1RB_Left:PC2	17.72	20.47
n77	636332	-57	2.1046 RF power output:n77_10MHz_30kHz_636332;50;CP-OFDM 256QAM^Inner_1RB_Right:PC2	17.64	20.39
n77	636332	-57	2.1046 RF power output:n77_10MHz_30kHz_636332;51;CP-OFDM 256QAM^Inner_Full:PC2	17.91	20.66
n77	636332	-57	2.1046 RF power output:n77_10MHz_30kHz_636332;52;CP-OFDM 256QAM^Edge_1RB_Left:PC2	17.71	20.46
n77	636332	-57	2.1046 RF power output:n77_10MHz_30kHz_636332;53;CP-OFDM 256QAM^Edge_1RB_Right:PC2	17.68	20.43
n77	636332	-57	2.1046 RF power output:n77_10MHz_30kHz_636332;54;CP-OFDM 256QAM^Outer_Full:PC2	17.58	20.33
n77	630500	-55	2.1046 RF power output:n77_15MHz_30kHz_630500;1;DFT-s-OFDM PI/2 BPSK^Inner_1RB_Left:PC2	25.37	28.12
n77	630500	-55	2.1046 RF power output:n77_15MHz_30kHz_630500;2;DFT-s-OFDM PI/2 BPSK^Inner_1RB_Right:PC2	25.58	28.33
n77	630500	-55	2.1046 RF power output:n77_15MHz_30kHz_630500;3;DFT-s-OFDM PI/2 BPSK^Inner_Full:PC2	25.72	28.47
n77	630500	-55	2.1046 RF power output:n77_15MHz_30kHz_630500;4;DFT-s-OFDM PI/2 BPSK^Edge_1RB_Left:PC2	23.01	25.76
n77	630500	-55	2.1046 RF power output:n77_15MHz_30kHz_630500;5;DFT-s-OFDM PI/2 BPSK^Edge_1RB_Right:PC2	23.16	25.91
n77	630500	-55	2.1046 RF power output:n77_15MHz_30kHz_630500;6;DFT-s-OFDM PI/2 BPSK^Outer_Full:PC2	25.17	27.92
n77	630500	-55	2.1046 RF power output:n77_15MHz_30kHz_630500;7;DFT-s-OFDM QPSK^Inner_1RB_Left:PC2	25.4	28.15
n77	630500	-55	2.1046 RF power output:n77_15MHz_30kHz_630500;8;DFT-s-OFDM QPSK^Inner_1RB_Right:PC2	25.7	28.45
n77	630500	-55	2.1046 RF power output:n77_15MHz_30kHz_630500;9;DFT-s-OFDM QPSK^Inner_Full:PC2	25.8	28.55
n77	630500	-55	2.1046 RF power output:n77_15MHz_30kHz_630500;10;DFT-s-OFDM QPSK^Edge_1RB_Left:PC2	22.87	25.62
n77	630500	-55	2.1046 RF power output:n77_15MHz_30kHz_630500;11;DFT-s-OFDM QPSK^Edge_1RB_Right:PC2	23.2	25.95
n77	630500	-55	2.1046 RF power output:n77_15MHz_30kHz_630500;12;DFT-s-OFDM QPSK^Outer_Full:PC2	24.5	27.25
n77	630500	-55	2.1046 RF power output:n77_15MHz_30kHz_630500;13;DFT-s-OFDM 16QAM^Inner_1RB_Left:PC2	24.16	26.91
n77	630500	-55	2.1046 RF power output:n77_15MHz_30kHz_630500;14;DFT-s-OFDM 16QAM^Inner_1RB_Right:PC2	24.47	27.22

Band	Channel	Cell Power	Test Item	Measured Value	EIRP
n77	630500	-55	2.1046 RF power output:n77_15MHz_30kHz_630500;15;DFT-s-OFDM 16QAM^Inner_Full:PC2	24.59	27.34
n77	630500	-55	2.1046 RF power output:n77_15MHz_30kHz_630500;16;DFT-s-OFDM 16QAM^Edge_1RB_Left:PC2	22.88	25.63
n77	630500	-55	2.1046 RF power output:n77_15MHz_30kHz_630500;17;DFT-s-OFDM 16QAM^Edge_1RB_Right:PC2	23.19	25.94
n77	630500	-55	2.1046 RF power output:n77_15MHz_30kHz_630500;18;DFT-s-OFDM 16QAM^Outer_Full:PC2	23.59	26.34
n77	630500	-55	2.1046 RF power output:n77_15MHz_30kHz_630500;19;DFT-s-OFDM 64QAM^Inner_1RB_Left:PC2	23.04	25.79
n77	630500	-55	2.1046 RF power output:n77_15MHz_30kHz_630500;20;DFT-s-OFDM 64QAM^Inner_1RB_Right:PC2	23.36	26.11
n77	630500	-55	2.1046 RF power output:n77_15MHz_30kHz_630500;21;DFT-s-OFDM 64QAM^Inner_Full:PC2	23.44	26.19
n77	630500	-55	2.1046 RF power output:n77_15MHz_30kHz_630500;22;DFT-s-OFDM 64QAM^Edge_1RB_Left:PC2	22.83	25.58
n77	630500	-55	2.1046 RF power output:n77_15MHz_30kHz_630500;23;DFT-s-OFDM 64QAM^Edge_1RB_Right:PC2	23.17	25.92
n77	630500	-55	2.1046 RF power output:n77_15MHz_30kHz_630500;24;DFT-s-OFDM 64QAM^Outer_Full:PC2	22.88	25.63
n77	630500	-55	2.1046 RF power output:n77_15MHz_30kHz_630500;25;DFT-s-OFDM 256QAM^Inner_1RB_Left:PC2	20.46	23.21
n77	630500	-55	2.1046 RF power output:n77_15MHz_30kHz_630500;26;DFT-s-OFDM 256QAM^Inner_1RB_Right:PC2	20.78	23.53
n77	630500	-55	2.1046 RF power output:n77_15MHz_30kHz_630500;27;DFT-s-OFDM 256QAM^Inner_Full:PC2	21.19	23.94
n77	630500	-55	2.1046 RF power output:n77_15MHz_30kHz_630500;28;DFT-s-OFDM 256QAM^Edge_1RB_Left:PC2	20.39	23.14
n77	630500	-55	2.1046 RF power output:n77_15MHz_30kHz_630500;29;DFT-s-OFDM 256QAM^Edge_1RB_Right:PC2	20.6	23.35
n77	630500	-55	2.1046 RF power output:n77_15MHz_30kHz_630500;30;DFT-s-OFDM 256QAM^Outer_Full:PC2	20.47	23.22
n77	630500	-55	2.1046 RF power output:n77_15MHz_30kHz_630500;31;CP-OFDM QPSK^Inner_1RB_Left:PC2	23.48	26.23
n77	630500	-55	2.1046 RF power output:n77_15MHz_30kHz_630500;32;CP-OFDM QPSK^Inner_1RB_Right:PC2	23.79	26.54
n77	630500	-55	2.1046 RF power output:n77_15MHz_30kHz_630500;33;CP-OFDM QPSK^Inner_Full:PC2	23.9	26.65
n77	630500	-55	2.1046 RF power output:n77_15MHz_30kHz_630500;34;CP-OFDM QPSK^Edge_1RB_Left:PC2	22.06	24.81
n77	630500	-55	2.1046 RF power output:n77_15MHz_30kHz_630500;35;CP-OFDM QPSK^Edge_1RB_Right:PC2	22.38	25.13
n77	630500	-55	2.1046 RF power output:n77_15MHz_30kHz_630500;36;CP-OFDM QPSK^Outer_Full:PC2	22.71	25.46
n77	630500	-55	2.1046 RF power output:n77_15MHz_30kHz_630500;37;CP-OFDM 16QAM^Inner_1RB_Left:PC2	23.27	26.02
n77	630500	-55	2.1046 RF power output:n77_15MHz_30kHz_630500;38;CP-OFDM 16QAM^Inner_1RB_Right:PC2	23.53	26.28
n77	630500	-55	2.1046 RF power output:n77_15MHz_30kHz_630500;39;CP-OFDM 16QAM^Inner_Full:PC2	23.42	26.17
n77	630500	-55	2.1046 RF power output:n77_15MHz_30kHz_630500;40;CP-OFDM 16QAM^Edge_1RB_Left:PC2	23.01	25.76
n77	630500	-55	2.1046 RF power output:n77_15MHz_30kHz_630500;41;CP-OFDM 16QAM^Edge_1RB_Right:PC2	23.33	26.08
n77	630500	-55	2.1046 RF power output:n77_15MHz_30kHz_630500;42;CP-OFDM 16QAM^Outer_Full:PC2	22.62	25.37
n77	630500	-55	2.1046 RF power output:n77_15MHz_30kHz_630500;43;CP-OFDM 64QAM^Inner_1RB_Left:PC2	22.87	25.62
n77	630500	-55	2.1046 RF power output:n77_15MHz_30kHz_630500;44;CP-OFDM 64QAM^Inner_1RB_Right:PC2	23	25.75
n77	630500	-55	2.1046 RF power output:n77_15MHz_30kHz_630500;45;CP-OFDM 64QAM^Inner_Full:PC2	22.97	25.72
n77	630500	-55	2.1046 RF power output:n77_15MHz_30kHz_630500;46;CP-OFDM 64QAM^Edge_1RB_Left:PC2	22.48	25.23
n77	630500	-55	2.1046 RF power output:n77_15MHz_30kHz_630500;47;CP-OFDM 64QAM^Edge_1RB_Right:PC2	22.81	25.56
n77	630500	-55	2.1046 RF power output:n77_15MHz_30kHz_630500;48;CP-OFDM 64QAM^Outer_Full:PC2	22.13	24.88
n77	630500	-55	2.1046 RF power output:n77_15MHz_30kHz_630500;49;CP-OFDM 256QAM^Inner_1RB_Left:PC2	18.45	21.2
n77	630500	-55	2.1046 RF power output:n77_15MHz_30kHz_630500;50;CP-OFDM 256QAM^Inner_1RB_Right:PC2	18.76	21.51
n77	630500	-55	2.1046 RF power output:n77_15MHz_30kHz_630500;51;CP-OFDM 256QAM^Inner_Full:PC2	19.14	21.89
n77	630500	-55	2.1046 RF power output:n77_15MHz_30kHz_630500;52;CP-OFDM 256QAM^Edge_1RB_Left:PC2	18.24	20.99
n77	630500	-55	2.1046 RF power output:n77_15MHz_30kHz_630500;53;CP-OFDM 256QAM^Edge_1RB_Right:PC2	18.55	21.3
n77	630500	-55	2.1046 RF power output:n77_15MHz_30kHz_630500;54;CP-OFDM 256QAM^Outer_Full:PC2	18.68	21.43
n77	633334	-55	2.1046 RF power output:n77_15MHz_30kHz_633334;1;DFT-s-OFDM PI/2 BPSK^Inner_1RB_Left:PC2	25.6	28.35
n77	633334	-55	2.1046 RF power output:n77_15MHz_30kHz_633334;2;DFT-s-OFDM PI/2 BPSK^Inner_1RB_Right:PC2	25.18	27.93
n77	633334	-55	2.1046 RF power output:n77_15MHz_30kHz_633334;3;DFT-s-OFDM PI/2 BPSK^Inner_Full:PC2	25.8	28.55
n77	633334	-55	2.1046 RF power output:n77_15MHz_30kHz_633334;4;DFT-s-OFDM PI/2 BPSK^Edge_1RB_Left:PC2	23.24	25.99
n77	633334	-55	2.1046 RF power output:n77_15MHz_30kHz_633334;5;DFT-s-OFDM PI/2 BPSK^Edge_1RB_Right:PC2	22.9	25.65
n77	633334	-55	2.1046 RF power output:n77_15MHz_30kHz_633334;6;DFT-s-OFDM PI/2 BPSK^Outer_Full:PC2	25.22	27.97
n77	633334	-55	2.1046 RF power output:n77_15MHz_30kHz_633334;7;DFT-s-OFDM QPSK^Inner_1RB_Left:PC2	25.62	28.37
n77	633334	-55	2.1046 RF power output:n77_15MHz_30kHz_633334;8;DFT-s-OFDM QPSK^Inner_1RB_Right:PC2	25.29	28.04
n77	633334	-55	2.1046 RF power output:n77_15MHz_30kHz_633334;9;DFT-s-OFDM QPSK^Inner_Full:PC2	25.77	28.52
n77	633334	-55	2.1046 RF power output:n77_15MHz_30kHz_633334;10;DFT-s-OFDM QPSK^Edge_1RB_Left:PC2	23.31	26.06
n77	633334	-55	2.1046 RF power output:n77_15MHz_30kHz_633334;11;DFT-s-OFDM QPSK^Edge_1RB_Right:PC2	22.84	25.59
n77	633334	-55	2.1046 RF power output:n77_15MHz_30kHz_633334;12;DFT-s-OFDM QPSK^Outer_Full:PC2	24.52	27.27
n77	633334	-55	2.1046 RF power output:n77_15MHz_30kHz_633334;13;DFT-s-OFDM 16QAM^Inner_1RB_Left:PC2	24.48	27.23
n77	633334	-55	2.1046 RF power output:n77_15MHz_30kHz_633334;14;DFT-s-OFDM 16QAM^Inner_1RB_Right:PC2	24.05	26.8
n77	633334	-55	2.1046 RF power output:n77_15MHz_30kHz_633334;15;DFT-s-OFDM 16QAM^Inner_Full:PC2	24.64	27.39
n77	633334	-55	2.1046 RF power output:n77_15MHz_30kHz_633334;16;DFT-s-OFDM 16QAM^Edge_1RB_Left:PC2	23.28	26.03
n77	633334	-55	2.1046 RF power output:n77_15MHz_30kHz_633334;17;DFT-s-OFDM 16QAM^Edge_1RB_Right:PC2	22.83	25.58
n77	633334	-55	2.1046 RF power output:n77_15MHz_30kHz_633334;18;DFT-s-OFDM 16QAM^Outer_Full:PC2	23.52	26.27
n77	633334	-55	2.1046 RF power output:n77_15MHz_30kHz_633334;19;DFT-s-OFDM 64QAM^Inner_1RB_Left:PC2	23.43	26.18
n77	633334	-55	2.1046 RF power output:n77_15MHz_30kHz_633334;20;DFT-s-OFDM 64QAM^Inner_1RB_Right:PC2	23.01	25.76
n77	633334	-55	2.1046 RF power output:n77_15MHz_30kHz_633334;21;DFT-s-OFDM 64QAM^Inner_Full:PC2	23.59	26.34
n77	633334	-55	2.1046 RF power output:n77_15MHz_30kHz_633334;22;DFT-s-OFDM 64QAM^Edge_1RB_Left:PC2	23.3	26.05
n77	633334	-55	2.1046 RF power output:n77_15MHz_30kHz_633334;23;DFT-s-OFDM 64QAM^Edge_1RB_Right:PC2	22.82	25.57
n77	633334	-55	2.1046 RF power output:n77_15MHz_30kHz_633334;24;DFT-s-OFDM 64QAM^Outer_Full:PC2	23	25.75
n77	633334	-55	2.1046 RF power output:n77_15MHz_30kHz_633334;25;DFT-s-OFDM 256QAM^Inner_1RB_Left:PC2	20.72	23.47
n77	633334	-55	2.1046 RF power output:n77_15MHz_30kHz_633334;26;DFT-s-OFDM 256QAM^Inner_1RB_Right:PC2	20.3	23.05
n77	633334	-55	2.1046 RF power output:n77_15MHz_30kHz_633334;27;DFT-s-OFDM 256QAM^Inner_Full:PC2	21.18	23.93
n77	633334	-55	2.1046 RF power output:n77_15MHz_30kHz_633334;28;DFT-s-OFDM 256QAM^Edge_1RB_Left:PC2	20.55	23.3
n77	633334	-55	2.1046 RF power output:n77_15MHz_30kHz_633334;29;DFT-s-OFDM 256QAM^Edge_1RB_Right:PC2	20.11	22.86
n77	633334	-55	2.1046 RF power output:n77_15MHz_30kHz_633334;30;DFT-s-OFDM 256QAM^Outer_Full:PC2	20.42	23.17
n77	633334	-55	2.1046 RF power output:n77_15MHz_30kHz_633334;31;CP-OFDM QPSK^Inner_1RB_Left:PC2	23.92	26.67
n77	633334	-55	2.1046 RF power output:n77_15MHz_30kHz_633334;32;CP-OFDM QPSK^Inner_1RB_Right:PC2	23.49	26.24
n77	633334	-55	2.1046 RF power output:n77_15MHz_30kHz_633334;33;CP-OFDM QPSK^Inner_Full:PC2	24.11	26.86
n77	633334	-55	2.1046 RF power output:n77_15MHz_30kHz_633334;34;CP-OFDM QPSK^Edge_1RB_Left:PC2	22.27	25.02
n77	633334	-55	2.1046 RF power output:n77_15MHz_30kHz_633334;35;CP-OFDM QPSK^Edge_1RB_Right:PC2	21.96	24.71
n77	633334	-55	2.1046 RF power output:n77_15MHz_30kHz_633334;36;CP-OFDM QPSK^Outer_Full:PC2	22.53	25.28
n77	633334	-55	2.1046 RF power output:n77_15MHz_30kHz_633334;37;CP-OFDM 16QAM^Inner_1RB_Left:PC2	23.6	26.35
n77	633334	-55	2.1046 RF power output:n77_15MHz_30kHz_633334;38;CP-OFDM 16QAM^Inner_1RB_Right:PC2	23.17	25.92
n77	633334	-55	2.1046 RF power output:n77_15MHz_30kHz_633334;39;CP-OFDM 16QAM^Inner_Full:PC2	23.57	26.32
n77	633334	-55	2.1046 RF power output:n77_15MHz_30kHz_633334;40;CP-OFDM 16QAM^Edge_1RB_Left:PC2	23.39	26.14
n77	633334	-55	2.1046 RF power output:n77_15MHz_30kHz_633334;41;CP-OFDM 16QAM^Edge_1RB_Right:PC2	22.96	25.71
n77	633334	-55	2.1046 RF power output:n77_15MHz_30kHz_633334;42;CP-OFDM 16QAM^Outer_Full:PC2	22.54	25.29
n77	633334	-55	2.1046 RF power output:n77_15MHz_30kHz_633334;43;CP-OFDM 64QAM^Inner_1RB_Left:PC2	23.1	25.85
n77	633334	-55	2.1046 RF power output:n77_15MHz_30kHz_633334;44;CP-OFDM 64QAM^Inner_1RB_Right:PC2	22.58	25.33
n77	633334	-55	2.1046 RF power output:n77_15MHz_30kHz_633334;45;CP-OFDM 64QAM^Inner_Full:PC2	23.1	25.85
n77	633334	-55	2.1046 RF power output:n77_15MHz_30kHz_633334;46;CP-OFDM 64QAM^Edge_1RB_Left:PC2	22.8	25.55
n77	633334	-55	2.1046 RF power output:n77_15MHz_30kHz_633334;47;CP-OFDM 64QAM^Edge_1RB_Right:PC2	22.37	25.12
n77	633334	-55	2.1046 RF power output:n77_15MHz_30kHz_633334;48;CP-OFDM 64QAM^Outer_Full:PC2	22.06	24.81

Band	Channel	Cell Power	Test Item	Measured Value	EIRP
n77	633334	-55	2.1046 RF power output:n77_15MHz_30kHz_633334;49;CP-OFDM 256QAM^Inner_1RB_Left:PC2	18.73	21.48
n77	633334	-55	2.1046 RF power output:n77_15MHz_30kHz_633334;50;CP-OFDM 256QAM^Inner_1RB_Right:PC2	18.31	21.06
n77	633334	-55	2.1046 RF power output:n77_15MHz_30kHz_633334;51;CP-OFDM 256QAM^Inner_Full:PC2	19.13	21.88
n77	633334	-55	2.1046 RF power output:n77_15MHz_30kHz_633334;52;CP-OFDM 256QAM^Edge_1RB_Left:PC2	18.53	21.28
n77	633334	-55	2.1046 RF power output:n77_15MHz_30kHz_633334;53;CP-OFDM 256QAM^Edge_1RB_Right:PC2	18.09	20.84
n77	633334	-55	2.1046 RF power output:n77_15MHz_30kHz_633334;54;CP-OFDM 256QAM^Outer_Full:PC2	18.62	21.37
n77	636166	-55	2.1046 RF power output:n77_15MHz_30kHz_636166;1;DFT-s-OFDM PI/2 BPSK^Inner_1RB_Left:PC2	25.01	27.76
n77	636166	-55	2.1046 RF power output:n77_15MHz_30kHz_636166;2;DFT-s-OFDM PI/2 BPSK^Inner_1RB_Right:PC2	24.67	27.42
n77	636166	-55	2.1046 RF power output:n77_15MHz_30kHz_636166;3;DFT-s-OFDM PI/2 BPSK^Inner_Full:PC2	24.98	27.73
n77	636166	-55	2.1046 RF power output:n77_15MHz_30kHz_636166;4;DFT-s-OFDM PI/2 BPSK^Edge_1RB_Left:PC2	22.68	25.43
n77	636166	-55	2.1046 RF power output:n77_15MHz_30kHz_636166;5;DFT-s-OFDM PI/2 BPSK^Edge_1RB_Right:PC2	22.34	25.09
n77	636166	-55	2.1046 RF power output:n77_15MHz_30kHz_636166;6;DFT-s-OFDM PI/2 BPSK^Outer_Full:PC2	24.47	27.22
n77	636166	-55	2.1046 RF power output:n77_15MHz_30kHz_636166;7;DFT-s-OFDM QPSK^Inner_1RB_Left:PC2	25.02	27.77
n77	636166	-55	2.1046 RF power output:n77_15MHz_30kHz_636166;8;DFT-s-OFDM QPSK^Inner_1RB_Right:PC2	24.68	27.43
n77	636166	-55	2.1046 RF power output:n77_15MHz_30kHz_636166;9;DFT-s-OFDM QPSK^Inner_Full:PC2	24.95	27.7
n77	636166	-55	2.1046 RF power output:n77_15MHz_30kHz_636166;10;DFT-s-OFDM QPSK^Edge_1RB_Left:PC2	22.71	25.46
n77	636166	-55	2.1046 RF power output:n77_15MHz_30kHz_636166;11;DFT-s-OFDM QPSK^Edge_1RB_Right:PC2	22.35	25.1
n77	636166	-55	2.1046 RF power output:n77_15MHz_30kHz_636166;12;DFT-s-OFDM QPSK^Outer_Full:PC2	23.8	26.55
n77	636166	-55	2.1046 RF power output:n77_15MHz_30kHz_636166;13;DFT-s-OFDM 16QAM^Inner_1RB_Left:PC2	23.88	26.63
n77	636166	-55	2.1046 RF power output:n77_15MHz_30kHz_636166;14;DFT-s-OFDM 16QAM^Inner_1RB_Right:PC2	23.53	26.28
n77	636166	-55	2.1046 RF power output:n77_15MHz_30kHz_636166;15;DFT-s-OFDM 16QAM^Inner_Full:PC2	23.84	26.59
n77	636166	-55	2.1046 RF power output:n77_15MHz_30kHz_636166;16;DFT-s-OFDM 16QAM^Edge_1RB_Left:PC2	22.69	25.44
n77	636166	-55	2.1046 RF power output:n77_15MHz_30kHz_636166;17;DFT-s-OFDM 16QAM^Edge_1RB_Right:PC2	22.34	25.09
n77	636166	-55	2.1046 RF power output:n77_15MHz_30kHz_636166;18;DFT-s-OFDM 16QAM^Outer_Full:PC2	22.79	25.54
n77	636166	-55	2.1046 RF power output:n77_15MHz_30kHz_636166;19;DFT-s-OFDM 64QAM^Inner_1RB_Left:PC2	22.89	25.64
n77	636166	-55	2.1046 RF power output:n77_15MHz_30kHz_636166;20;DFT-s-OFDM 64QAM^Inner_1RB_Right:PC2	22.56	25.31
n77	636166	-55	2.1046 RF power output:n77_15MHz_30kHz_636166;21;DFT-s-OFDM 64QAM^Inner_Full:PC2	22.79	25.54
n77	636166	-55	2.1046 RF power output:n77_15MHz_30kHz_636166;22;DFT-s-OFDM 64QAM^Edge_1RB_Left:PC2	22.71	25.46
n77	636166	-55	2.1046 RF power output:n77_15MHz_30kHz_636166;23;DFT-s-OFDM 64QAM^Edge_1RB_Right:PC2	22.38	25.13
n77	636166	-55	2.1046 RF power output:n77_15MHz_30kHz_636166;24;DFT-s-OFDM 64QAM^Outer_Full:PC2	22.28	25.03
n77	636166	-55	2.1046 RF power output:n77_15MHz_30kHz_636166;25;DFT-s-OFDM 256QAM^Inner_1RB_Left:PC2	20.25	23
n77	636166	-55	2.1046 RF power output:n77_15MHz_30kHz_636166;26;DFT-s-OFDM 256QAM^Inner_1RB_Right:PC2	19.93	22.68
n77	636166	-55	2.1046 RF power output:n77_15MHz_30kHz_636166;27;DFT-s-OFDM 256QAM^Inner_Full:PC2	20.38	23.13
n77	636166	-55	2.1046 RF power output:n77_15MHz_30kHz_636166;28;DFT-s-OFDM 256QAM^Edge_1RB_Left:PC2	20.1	22.85
n77	636166	-55	2.1046 RF power output:n77_15MHz_30kHz_636166;29;DFT-s-OFDM 256QAM^Edge_1RB_Right:PC2	19.76	22.51
n77	636166	-55	2.1046 RF power output:n77_15MHz_30kHz_636166;30;DFT-s-OFDM 256QAM^Outer_Full:PC2	19.73	22.48
n77	636166	-55	2.1046 RF power output:n77_15MHz_30kHz_636166;31;CP-OFDM QPSK^Inner_1RB_Left:PC2	23.31	26.06
n77	636166	-55	2.1046 RF power output:n77_15MHz_30kHz_636166;32;CP-OFDM QPSK^Inner_1RB_Right:PC2	22.98	25.73
n77	636166	-55	2.1046 RF power output:n77_15MHz_30kHz_636166;33;CP-OFDM QPSK^Inner_Full:PC2	23.3	26.05
n77	636166	-55	2.1046 RF power output:n77_15MHz_30kHz_636166;34;CP-OFDM QPSK^Edge_1RB_Left:PC2	21.72	24.47
n77	636166	-55	2.1046 RF power output:n77_15MHz_30kHz_636166;35;CP-OFDM QPSK^Edge_1RB_Right:PC2	21.38	24.13
n77	636166	-55	2.1046 RF power output:n77_15MHz_30kHz_636166;36;CP-OFDM QPSK^Outer_Full:PC2	21.84	24.59
n77	636166	-55	2.1046 RF power output:n77_15MHz_30kHz_636166;37;CP-OFDM 16QAM^Inner_1RB_Left:PC2	23.01	25.76
n77	636166	-55	2.1046 RF power output:n77_15MHz_30kHz_636166;38;CP-OFDM 16QAM^Inner_1RB_Right:PC2	22.67	25.42
n77	636166	-55	2.1046 RF power output:n77_15MHz_30kHz_636166;39;CP-OFDM 16QAM^Inner_Full:PC2	22.77	25.52
n77	636166	-55	2.1046 RF power output:n77_15MHz_30kHz_636166;40;CP-OFDM 16QAM^Edge_1RB_Left:PC2	22.83	25.58
n77	636166	-55	2.1046 RF power output:n77_15MHz_30kHz_636166;41;CP-OFDM 16QAM^Edge_1RB_Right:PC2	22.49	25.24
n77	636166	-55	2.1046 RF power output:n77_15MHz_30kHz_636166;42;CP-OFDM 16QAM^Outer_Full:PC2	21.84	24.59
n77	636166	-55	2.1046 RF power output:n77_15MHz_30kHz_636166;43;CP-OFDM 64QAM^Inner_1RB_Left:PC2	22.41	25.16
n77	636166	-55	2.1046 RF power output:n77_15MHz_30kHz_636166;44;CP-OFDM 64QAM^Inner_1RB_Right:PC2	22.06	24.81
n77	636166	-55	2.1046 RF power output:n77_15MHz_30kHz_636166;45;CP-OFDM 64QAM^Inner_Full:PC2	22.28	25.03
n77	636166	-55	2.1046 RF power output:n77_15MHz_30kHz_636166;46;CP-OFDM 64QAM^Edge_1RB_Left:PC2	22.22	24.97
n77	636166	-55	2.1046 RF power output:n77_15MHz_30kHz_636166;47;CP-OFDM 64QAM^Edge_1RB_Right:PC2	21.87	24.62
n77	636166	-55	2.1046 RF power output:n77_15MHz_30kHz_636166;48;CP-OFDM 64QAM^Outer_Full:PC2	21.33	24.08
n77	636166	-55	2.1046 RF power output:n77_15MHz_30kHz_636166;49;CP-OFDM 256QAM^Inner_1RB_Left:PC2	18.16	20.91
n77	636166	-55	2.1046 RF power output:n77_15MHz_30kHz_636166;50;CP-OFDM 256QAM^Inner_1RB_Right:PC2	17.81	20.56
n77	636166	-55	2.1046 RF power output:n77_15MHz_30kHz_636166;51;CP-OFDM 256QAM^Inner_Full:PC2	18.35	21.1
n77	636166	-55	2.1046 RF power output:n77_15MHz_30kHz_636166;52;CP-OFDM 256QAM^Edge_1RB_Left:PC2	17.94	20.69
n77	636166	-55	2.1046 RF power output:n77_15MHz_30kHz_636166;53;CP-OFDM 256QAM^Edge_1RB_Right:PC2	17.6	20.35
n77	636166	-55	2.1046 RF power output:n77_15MHz_30kHz_636166;54;CP-OFDM 256QAM^Outer_Full:PC2	17.97	20.72
n77	630668	-54	2.1046 RF power output:n77_20MHz_30kHz_630668;1;DFT-s-OFDM PI/2 BPSK^Inner_1RB_Left:PC2	25.15	27.9
n77	630668	-54	2.1046 RF power output:n77_20MHz_30kHz_630668;2;DFT-s-OFDM PI/2 BPSK^Inner_1RB_Right:PC2	25.39	28.14
n77	630668	-54	2.1046 RF power output:n77_20MHz_30kHz_630668;3;DFT-s-OFDM PI/2 BPSK^Inner_Full:PC2	25.89	28.64
n77	630668	-54	2.1046 RF power output:n77_20MHz_30kHz_630668;4;DFT-s-OFDM PI/2 BPSK^Edge_1RB_Left:PC2	22.6	25.35
n77	630668	-54	2.1046 RF power output:n77_20MHz_30kHz_630668;5;DFT-s-OFDM PI/2 BPSK^Edge_1RB_Right:PC2	22.87	25.62
n77	630668	-54	2.1046 RF power output:n77_20MHz_30kHz_630668;6;DFT-s-OFDM PI/2 BPSK^Outer_Full:PC2	25.29	28.04
n77	630668	-54	2.1046 RF power output:n77_20MHz_30kHz_630668;7;DFT-s-OFDM QPSK^Inner_1RB_Left:PC2	25.18	27.93
n77	630668	-54	2.1046 RF power output:n77_20MHz_30kHz_630668;8;DFT-s-OFDM QPSK^Inner_1RB_Right:PC2	25.41	28.16
n77	630668	-54	2.1046 RF power output:n77_20MHz_30kHz_630668;9;DFT-s-OFDM QPSK^Inner_Full:PC2	25.87	28.62
n77	630668	-54	2.1046 RF power output:n77_20MHz_30kHz_630668;10;DFT-s-OFDM QPSK^Edge_1RB_Left:PC2	22.65	25.4
n77	630668	-54	2.1046 RF power output:n77_20MHz_30kHz_630668;11;DFT-s-OFDM QPSK^Edge_1RB_Right:PC2	22.89	25.64
n77	630668	-54	2.1046 RF power output:n77_20MHz_30kHz_630668;12;DFT-s-OFDM QPSK^Outer_Full:PC2	24.5	27.25
n77	630668	-54	2.1046 RF power output:n77_20MHz_30kHz_630668;13;DFT-s-OFDM 16QAM^Inner_1RB_Left:PC2	23.91	26.66
n77	630668	-54	2.1046 RF power output:n77_20MHz_30kHz_630668;14;DFT-s-OFDM 16QAM^Inner_1RB_Right:PC2	24.1	26.85
n77	630668	-54	2.1046 RF power output:n77_20MHz_30kHz_630668;15;DFT-s-OFDM 16QAM^Inner_Full:PC2	24.56	27.31
n77	630668	-54	2.1046 RF power output:n77_20MHz_30kHz_630668;16;DFT-s-OFDM 16QAM^Edge_1RB_Left:PC2	22.66	25.41
n77	630668	-54	2.1046 RF power output:n77_20MHz_30kHz_630668;17;DFT-s-OFDM 16QAM^Edge_1RB_Right:PC2	22.89	25.64
n77	630668	-54	2.1046 RF power output:n77_20MHz_30kHz_630668;18;DFT-s-OFDM 16QAM^Outer_Full:PC2	23.51	26.26
n77	630668	-54	2.1046 RF power output:n77_20MHz_30kHz_630668;19;DFT-s-OFDM 64QAM^Inner_1RB_Left:PC2	22.91	25.66
n77	630668	-54	2.1046 RF power output:n77_20MHz_30kHz_630668;20;DFT-s-OFDM 64QAM^Inner_1RB_Right:PC2	23.25	26
n77	630668	-54	2.1046 RF power output:n77_20MHz_30kHz_630668;21;DFT-s-OFDM 64QAM^Inner_Full:PC2	23.63	26.38
n77	630668	-54	2.1046 RF power output:n77_20MHz_30kHz_630668;22;DFT-s-OFDM 64QAM^Edge_1RB_Left:PC2	22.62	25.37
n77	630668	-54	2.1046 RF power output:n77_20MHz_30kHz_630668;23;DFT-s-OFDM 64QAM^Edge_1RB_Right:PC2	22.87	25.62
n77	630668	-54	2.1046 RF power output:n77_20MHz_30kHz_630668;24;DFT-s-OFDM 64QAM^Outer_Full:PC2	23.02	25.77
n77	630668	-54	2.1046 RF power output:n77_20MHz_30kHz_630668;25;DFT-s-OFDM 256QAM^Inner_1RB_Left:PC2	20.25	23
n77	630668	-54	2.1046 RF power output:n77_20MHz_30kHz_630668;26;DFT-s-OFDM 256QAM^Inner_1RB_Right:PC2	20.5	23.25
n77	630668	-54	2.1046 RF power output:n77_20MHz_30kHz_630668;27;DFT-s-OFDM 256QAM^Inner_Full:PC2	21.24	23.99
n77	630668	-54	2.1046 RF power output:n77_20MHz_30kHz_630668;28;DFT-s-OFDM 256QAM^Edge_1RB_Left:PC2	19.97	22.72

Band	Channel	Cell Power	Test Item	Measured Value	EIRP
n77	630668	-54	2.1046 RF power output:n77_20MHz_30kHz_630668;29;DFT-s-OFDM 256QAM^Edge_1RB_Right:PC2	20.21	22.96
n77	630668	-54	2.1046 RF power output:n77_20MHz_30kHz_630668;30;DFT-s-OFDM 256QAM^Outer_Full:PC2	20.51	23.26
n77	630668	-54	2.1046 RF power output:n77_20MHz_30kHz_630668;31;CP-OFDM QPSK^Inner_1RB_Left:PC2	23.33	26.08
n77	630668	-54	2.1046 RF power output:n77_20MHz_30kHz_630668;32;CP-OFDM QPSK^Inner_1RB_Right:PC2	23.57	26.32
n77	630668	-54	2.1046 RF power output:n77_20MHz_30kHz_630668;33;CP-OFDM QPSK^Inner_Full:PC2	24.09	26.84
n77	630668	-54	2.1046 RF power output:n77_20MHz_30kHz_630668;34;CP-OFDM QPSK^Edge_1RB_Left:PC2	21.65	24.4
n77	630668	-54	2.1046 RF power output:n77_20MHz_30kHz_630668;35;CP-OFDM QPSK^Edge_1RB_Right:PC2	21.92	24.67
n77	630668	-54	2.1046 RF power output:n77_20MHz_30kHz_630668;36;CP-OFDM QPSK^Outer_Full:PC2	22.62	25.37
n77	630668	-54	2.1046 RF power output:n77_20MHz_30kHz_630668;37;CP-OFDM 16QAM^Inner_1RB_Left:PC2	23.08	25.83
n77	630668	-54	2.1046 RF power output:n77_20MHz_30kHz_630668;38;CP-OFDM 16QAM^Inner_1RB_Right:PC2	23.32	26.07
n77	630668	-54	2.1046 RF power output:n77_20MHz_30kHz_630668;39;CP-OFDM 16QAM^Inner_Full:PC2	23.56	26.31
n77	630668	-54	2.1046 RF power output:n77_20MHz_30kHz_630668;40;CP-OFDM 16QAM^Edge_1RB_Left:PC2	22.77	25.52
n77	630668	-54	2.1046 RF power output:n77_20MHz_30kHz_630668;41;CP-OFDM 16QAM^Edge_1RB_Right:PC2	23.04	25.79
n77	630668	-54	2.1046 RF power output:n77_20MHz_30kHz_630668;42;CP-OFDM 16QAM^Outer_Full:PC2	22.59	25.34
n77	630668	-54	2.1046 RF power output:n77_20MHz_30kHz_630668;43;CP-OFDM 64QAM^Inner_1RB_Left:PC2	22.47	25.22
n77	630668	-54	2.1046 RF power output:n77_20MHz_30kHz_630668;44;CP-OFDM 64QAM^Inner_1RB_Right:PC2	22.71	25.46
n77	630668	-54	2.1046 RF power output:n77_20MHz_30kHz_630668;45;CP-OFDM 64QAM^Inner_Full:PC2	23.12	25.87
n77	630668	-54	2.1046 RF power output:n77_20MHz_30kHz_630668;46;CP-OFDM 64QAM^Edge_1RB_Left:PC2	22.16	24.91
n77	630668	-54	2.1046 RF power output:n77_20MHz_30kHz_630668;47;CP-OFDM 64QAM^Edge_1RB_Right:PC2	22.43	25.18
n77	630668	-54	2.1046 RF power output:n77_20MHz_30kHz_630668;48;CP-OFDM 64QAM^Outer_Full:PC2	22.1	24.85
n77	630668	-54	2.1046 RF power output:n77_20MHz_30kHz_630668;49;CP-OFDM 256QAM^Inner_1RB_Left:PC2	18.27	21.02
n77	630668	-54	2.1046 RF power output:n77_20MHz_30kHz_630668;50;CP-OFDM 256QAM^Inner_1RB_Right:PC2	18.5	21.25
n77	630668	-54	2.1046 RF power output:n77_20MHz_30kHz_630668;51;CP-OFDM 256QAM^Inner_Full:PC2	19.14	21.89
n77	630668	-54	2.1046 RF power output:n77_20MHz_30kHz_630668;52;CP-OFDM 256QAM^Edge_1RB_Left:PC2	17.97	20.72
n77	630668	-54	2.1046 RF power output:n77_20MHz_30kHz_630668;53;CP-OFDM 256QAM^Edge_1RB_Right:PC2	18.22	20.97
n77	630668	-54	2.1046 RF power output:n77_20MHz_30kHz_630668;54;CP-OFDM 256QAM^Outer_Full:PC2	18.88	21.63
n77	633334	-54	2.1046 RF power output:n77_20MHz_30kHz_633334;1;DFT-s-OFDM PI/2 BPSK^Inner_1RB_Left:PC2	25.46	28.21
n77	633334	-54	2.1046 RF power output:n77_20MHz_30kHz_633334;2;DFT-s-OFDM PI/2 BPSK^Inner_1RB_Right:PC2	24.99	27.74
n77	633334	-54	2.1046 RF power output:n77_20MHz_30kHz_633334;3;DFT-s-OFDM PI/2 BPSK^Inner_Full:PC2	25.92	28.67
n77	633334	-54	2.1046 RF power output:n77_20MHz_30kHz_633334;4;DFT-s-OFDM PI/2 BPSK^Edge_1RB_Left:PC2	22.99	25.74
n77	633334	-54	2.1046 RF power output:n77_20MHz_30kHz_633334;5;DFT-s-OFDM PI/2 BPSK^Edge_1RB_Right:PC2	22.54	25.29
n77	633334	-54	2.1046 RF power output:n77_20MHz_30kHz_633334;6;DFT-s-OFDM PI/2 BPSK^Outer_Full:PC2	25.31	28.06
n77	633334	-54	2.1046 RF power output:n77_20MHz_30kHz_633334;7;DFT-s-OFDM QPSK^Inner_1RB_Left:PC2	25.49	28.24
n77	633334	-54	2.1046 RF power output:n77_20MHz_30kHz_633334;8;DFT-s-OFDM QPSK^Inner_1RB_Right:PC2	25.01	27.76
n77	633334	-54	2.1046 RF power output:n77_20MHz_30kHz_633334;9;DFT-s-OFDM QPSK^Inner_Full:PC2	25.9	28.65
n77	633334	-54	2.1046 RF power output:n77_20MHz_30kHz_633334;10;DFT-s-OFDM QPSK^Edge_1RB_Left:PC2	23.03	25.78
n77	633334	-54	2.1046 RF power output:n77_20MHz_30kHz_633334;11;DFT-s-OFDM QPSK^Edge_1RB_Right:PC2	22.56	25.31
n77	633334	-54	2.1046 RF power output:n77_20MHz_30kHz_633334;12;DFT-s-OFDM QPSK^Outer_Full:PC2	24.64	27.39
n77	633334	-54	2.1046 RF power output:n77_20MHz_30kHz_633334;13;DFT-s-OFDM 16QAM^Inner_1RB_Left:PC2	24.34	27.09
n77	633334	-54	2.1046 RF power output:n77_20MHz_30kHz_633334;14;DFT-s-OFDM 16QAM^Inner_1RB_Right:PC2	23.86	26.61
n77	633334	-54	2.1046 RF power output:n77_20MHz_30kHz_633334;15;DFT-s-OFDM 16QAM^Inner_Full:PC2	24.72	27.47
n77	633334	-54	2.1046 RF power output:n77_20MHz_30kHz_633334;16;DFT-s-OFDM 16QAM^Edge_1RB_Left:PC2	23.03	25.78
n77	633334	-54	2.1046 RF power output:n77_20MHz_30kHz_633334;17;DFT-s-OFDM 16QAM^Edge_1RB_Right:PC2	22.56	25.31
n77	633334	-54	2.1046 RF power output:n77_20MHz_30kHz_633334;18;DFT-s-OFDM 16QAM^Outer_Full:PC2	23.6	26.35
n77	633334	-54	2.1046 RF power output:n77_20MHz_30kHz_633334;19;DFT-s-OFDM 64QAM^Inner_1RB_Left:PC2	23.31	26.06
n77	633334	-54	2.1046 RF power output:n77_20MHz_30kHz_633334;20;DFT-s-OFDM 64QAM^Inner_1RB_Right:PC2	22.85	25.6
n77	633334	-54	2.1046 RF power output:n77_20MHz_30kHz_633334;21;DFT-s-OFDM 64QAM^Inner_Full:PC2	23.74	26.49
n77	633334	-54	2.1046 RF power output:n77_20MHz_30kHz_633334;22;DFT-s-OFDM 64QAM^Edge_1RB_Left:PC2	23	25.75
n77	633334	-54	2.1046 RF power output:n77_20MHz_30kHz_633334;23;DFT-s-OFDM 64QAM^Edge_1RB_Right:PC2	22.54	25.29
n77	633334	-54	2.1046 RF power output:n77_20MHz_30kHz_633334;24;DFT-s-OFDM 64QAM^Outer_Full:PC2	23.11	25.86
n77	633334	-54	2.1046 RF power output:n77_20MHz_30kHz_633334;25;DFT-s-OFDM 256QAM^Inner_1RB_Left:PC2	20.55	23.3
n77	633334	-54	2.1046 RF power output:n77_20MHz_30kHz_633334;26;DFT-s-OFDM 256QAM^Inner_1RB_Right:PC2	20.08	22.83
n77	633334	-54	2.1046 RF power output:n77_20MHz_30kHz_633334;27;DFT-s-OFDM 256QAM^Inner_Full:PC2	21.25	24
n77	633334	-54	2.1046 RF power output:n77_20MHz_30kHz_633334;28;DFT-s-OFDM 256QAM^Edge_1RB_Left:PC2	20.25	23
n77	633334	-54	2.1046 RF power output:n77_20MHz_30kHz_633334;29;DFT-s-OFDM 256QAM^Edge_1RB_Right:PC2	19.8	22.55
n77	633334	-54	2.1046 RF power output:n77_20MHz_30kHz_633334;30;DFT-s-OFDM 256QAM^Outer_Full:PC2	20.55	23.3
n77	633334	-54	2.1046 RF power output:n77_20MHz_30kHz_633334;31;CP-OFDM QPSK^Inner_1RB_Left:PC2	23.77	26.52
n77	633334	-54	2.1046 RF power output:n77_20MHz_30kHz_633334;32;CP-OFDM QPSK^Inner_1RB_Right:PC2	23.31	26.06
n77	633334	-54	2.1046 RF power output:n77_20MHz_30kHz_633334;33;CP-OFDM QPSK^Inner_Full:PC2	24.25	27
n77	633334	-54	2.1046 RF power output:n77_20MHz_30kHz_633334;34;CP-OFDM QPSK^Edge_1RB_Left:PC2	22.02	24.77
n77	633334	-54	2.1046 RF power output:n77_20MHz_30kHz_633334;35;CP-OFDM QPSK^Edge_1RB_Right:PC2	21.6	24.35
n77	633334	-54	2.1046 RF power output:n77_20MHz_30kHz_633334;36;CP-OFDM QPSK^Outer_Full:PC2	22.68	25.43
n77	633334	-54	2.1046 RF power output:n77_20MHz_30kHz_633334;37;CP-OFDM 16QAM^Inner_1RB_Left:PC2	23.47	26.22
n77	633334	-54	2.1046 RF power output:n77_20MHz_30kHz_633334;38;CP-OFDM 16QAM^Inner_1RB_Right:PC2	23	25.75
n77	633334	-54	2.1046 RF power output:n77_20MHz_30kHz_633334;39;CP-OFDM 16QAM^Inner_Full:PC2	23.7	26.45
n77	633334	-54	2.1046 RF power output:n77_20MHz_30kHz_633334;40;CP-OFDM 16QAM^Edge_1RB_Left:PC2	23.15	25.9
n77	633334	-54	2.1046 RF power output:n77_20MHz_30kHz_633334;41;CP-OFDM 16QAM^Edge_1RB_Right:PC2	22.71	25.46
n77	633334	-54	2.1046 RF power output:n77_20MHz_30kHz_633334;42;CP-OFDM 16QAM^Outer_Full:PC2	22.67	25.42
n77	633334	-54	2.1046 RF power output:n77_20MHz_30kHz_633334;43;CP-OFDM 64QAM^Inner_1RB_Left:PC2	23	25.75
n77	633334	-54	2.1046 RF power output:n77_20MHz_30kHz_633334;44;CP-OFDM 64QAM^Inner_1RB_Right:PC2	22.54	25.29
n77	633334	-54	2.1046 RF power output:n77_20MHz_30kHz_633334;45;CP-OFDM 64QAM^Inner_Full:PC2	23.25	26
n77	633334	-54	2.1046 RF power output:n77_20MHz_30kHz_633334;46;CP-OFDM 64QAM^Edge_1RB_Left:PC2	22.67	25.42
n77	633334	-54	2.1046 RF power output:n77_20MHz_30kHz_633334;47;CP-OFDM 64QAM^Edge_1RB_Right:PC2	22.23	24.98
n77	633334	-54	2.1046 RF power output:n77_20MHz_30kHz_633334;48;CP-OFDM 64QAM^Outer_Full:PC2	22.16	24.91
n77	633334	-54	2.1046 RF power output:n77_20MHz_30kHz_633334;49;CP-OFDM 256QAM^Inner_1RB_Left:PC2	18.57	21.32
n77	633334	-54	2.1046 RF power output:n77_20MHz_30kHz_633334;50;CP-OFDM 256QAM^Inner_1RB_Right:PC2	18.09	20.84
n77	633334	-54	2.1046 RF power output:n77_20MHz_30kHz_633334;51;CP-OFDM 256QAM^Inner_Full:PC2	19.21	21.96
n77	633334	-54	2.1046 RF power output:n77_20MHz_30kHz_633334;52;CP-OFDM 256QAM^Edge_1RB_Left:PC2	18.26	21.01
n77	633334	-54	2.1046 RF power output:n77_20MHz_30kHz_633334;53;CP-OFDM 256QAM^Edge_1RB_Right:PC2	17.82	20.57
n77	633334	-54	2.1046 RF power output:n77_20MHz_30kHz_633334;54;CP-OFDM 256QAM^Outer_Full:PC2	18.79	21.54
n77	636000	-54	2.1046 RF power output:n77_20MHz_30kHz_636000;1;DFT-s-OFDM PI/2 BPSK^Inner_1RB_Left:PC2	25.06	27.81
n77	636000	-54	2.1046 RF power output:n77_20MHz_30kHz_636000;2;DFT-s-OFDM PI/2 BPSK^Inner_1RB_Right:PC2	24.45	27.2
n77	636000	-54	2.1046 RF power output:n77_20MHz_30kHz_636000;3;DFT-s-OFDM PI/2 BPSK^Inner_Full:PC2	25.08	27.83
n77	636000	-54	2.1046 RF power output:n77_20MHz_30kHz_636000;4;DFT-s-OFDM PI/2 BPSK^Edge_1RB_Left:PC2	22.64	25.39
n77	636000	-54	2.1046 RF power output:n77_20MHz_30kHz_636000;5;DFT-s-OFDM PI/2 BPSK^Edge_1RB_Right:PC2	22.03	24.78
n77	636000	-54	2.1046 RF power output:n77_20MHz_30kHz_636000;6;DFT-s-OFDM PI/2 BPSK^Outer_Full:PC2	24.6	27.35
n77	636000	-54	2.1046 RF power output:n77_20MHz_30kHz_636000;7;DFT-s-OFDM QPSK^Inner_1RB_Left:PC2	25.08	27.83
n77	636000	-54	2.1046 RF power output:n77_20MHz_30kHz_636000;8;DFT-s-OFDM QPSK^Inner_1RB_Right:PC2	24.46	27.21

Band	Channel	Cell Power	Test Item	Measured Value	EIRP
n77	636000	-54	2.1046 RF power output:n77_20MHz_30kHz_636000;9;DFT-s-OFDM QPSK^Inner_Full:PC2	25.05	27.8
n77	636000	-54	2.1046 RF power output:n77_20MHz_30kHz_636000;10;DFT-s-OFDM QPSK^Edge_1RB_Left:PC2	22.68	25.43
n77	636000	-54	2.1046 RF power output:n77_20MHz_30kHz_636000;11;DFT-s-OFDM QPSK^Edge_1RB_Right:PC2	22.05	24.8
n77	636000	-54	2.1046 RF power output:n77_20MHz_30kHz_636000;12;DFT-s-OFDM QPSK^Outer_Full:PC2	23.93	26.68
n77	636000	-54	2.1046 RF power output:n77_20MHz_30kHz_636000;13;DFT-s-OFDM 16QAM^Inner_1RB_Left:PC2	23.94	26.69
n77	636000	-54	2.1046 RF power output:n77_20MHz_30kHz_636000;14;DFT-s-OFDM 16QAM^Inner_1RB_Right:PC2	23.33	26.08
n77	636000	-54	2.1046 RF power output:n77_20MHz_30kHz_636000;15;DFT-s-OFDM 16QAM^Inner_Full:PC2	23.88	26.63
n77	636000	-54	2.1046 RF power output:n77_20MHz_30kHz_636000;16;DFT-s-OFDM 16QAM^Edge_1RB_Left:PC2	22.67	25.42
n77	636000	-54	2.1046 RF power output:n77_20MHz_30kHz_636000;17;DFT-s-OFDM 16QAM^Edge_1RB_Right:PC2	22.06	24.81
n77	636000	-54	2.1046 RF power output:n77_20MHz_30kHz_636000;18;DFT-s-OFDM 16QAM^Outer_Full:PC2	22.9	25.65
n77	636000	-54	2.1046 RF power output:n77_20MHz_30kHz_636000;19;DFT-s-OFDM 64QAM^Inner_1RB_Left:PC2	22.86	25.61
n77	636000	-54	2.1046 RF power output:n77_20MHz_30kHz_636000;20;DFT-s-OFDM 64QAM^Inner_1RB_Right:PC2	22.26	25.01
n77	636000	-54	2.1046 RF power output:n77_20MHz_30kHz_636000;21;DFT-s-OFDM 64QAM^Inner_Full:PC2	22.92	25.67
n77	636000	-54	2.1046 RF power output:n77_20MHz_30kHz_636000;22;DFT-s-OFDM 64QAM^Edge_1RB_Left:PC2	22.59	25.34
n77	636000	-54	2.1046 RF power output:n77_20MHz_30kHz_636000;23;DFT-s-OFDM 64QAM^Edge_1RB_Right:PC2	21.97	24.72
n77	636000	-54	2.1046 RF power output:n77_20MHz_30kHz_636000;24;DFT-s-OFDM 64QAM^Outer_Full:PC2	22.43	25.18
n77	636000	-54	2.1046 RF power output:n77_20MHz_30kHz_636000;25;DFT-s-OFDM 256QAM^Inner_1RB_Left:PC2	20.15	22.9
n77	636000	-54	2.1046 RF power output:n77_20MHz_30kHz_636000;26;DFT-s-OFDM 256QAM^Inner_1RB_Right:PC2	19.55	22.3
n77	636000	-54	2.1046 RF power output:n77_20MHz_30kHz_636000;27;DFT-s-OFDM 256QAM^Inner_Full:PC2	20.47	23.22
n77	636000	-54	2.1046 RF power output:n77_20MHz_30kHz_636000;28;DFT-s-OFDM 256QAM^Edge_1RB_Left:PC2	19.9	22.65
n77	636000	-54	2.1046 RF power output:n77_20MHz_30kHz_636000;29;DFT-s-OFDM 256QAM^Edge_1RB_Right:PC2	19.29	22.04
n77	636000	-54	2.1046 RF power output:n77_20MHz_30kHz_636000;30;DFT-s-OFDM 256QAM^Outer_Full:PC2	19.87	22.62
n77	636000	-54	2.1046 RF power output:n77_20MHz_30kHz_636000;31;CP-OFDM QPSK^Inner_1RB_Left:PC2	23.39	26.14
n77	636000	-54	2.1046 RF power output:n77_20MHz_30kHz_636000;32;CP-OFDM QPSK^Inner_1RB_Right:PC2	22.79	25.54
n77	636000	-54	2.1046 RF power output:n77_20MHz_30kHz_636000;33;CP-OFDM QPSK^Inner_Full:PC2	23.45	26.2
n77	636000	-54	2.1046 RF power output:n77_20MHz_30kHz_636000;34;CP-OFDM QPSK^Edge_1RB_Left:PC2	21.69	24.44
n77	636000	-54	2.1046 RF power output:n77_20MHz_30kHz_636000;35;CP-OFDM QPSK^Edge_1RB_Right:PC2	21.12	23.87
n77	636000	-54	2.1046 RF power output:n77_20MHz_30kHz_636000;36;CP-OFDM QPSK^Outer_Full:PC2	21.99	24.74
n77	636000	-54	2.1046 RF power output:n77_20MHz_30kHz_636000;37;CP-OFDM 16QAM^Inner_1RB_Left:PC2	23.09	25.84
n77	636000	-54	2.1046 RF power output:n77_20MHz_30kHz_636000;38;CP-OFDM 16QAM^Inner_1RB_Right:PC2	22.49	25.24
n77	636000	-54	2.1046 RF power output:n77_20MHz_30kHz_636000;39;CP-OFDM 16QAM^Inner_Full:PC2	22.86	25.61
n77	636000	-54	2.1046 RF power output:n77_20MHz_30kHz_636000;40;CP-OFDM 16QAM^Edge_1RB_Left:PC2	22.82	25.57
n77	636000	-54	2.1046 RF power output:n77_20MHz_30kHz_636000;41;CP-OFDM 16QAM^Edge_1RB_Right:PC2	22.23	24.98
n77	636000	-54	2.1046 RF power output:n77_20MHz_30kHz_636000;42;CP-OFDM 16QAM^Outer_Full:PC2	21.96	24.71
n77	636000	-54	2.1046 RF power output:n77_20MHz_30kHz_636000;43;CP-OFDM 64QAM^Inner_1RB_Left:PC2	22.5	25.25
n77	636000	-54	2.1046 RF power output:n77_20MHz_30kHz_636000;44;CP-OFDM 64QAM^Inner_1RB_Right:PC2	21.9	24.65
n77	636000	-54	2.1046 RF power output:n77_20MHz_30kHz_636000;45;CP-OFDM 64QAM^Inner_Full:PC2	22.44	25.19
n77	636000	-54	2.1046 RF power output:n77_20MHz_30kHz_636000;46;CP-OFDM 64QAM^Edge_1RB_Left:PC2	22.23	24.98
n77	636000	-54	2.1046 RF power output:n77_20MHz_30kHz_636000;47;CP-OFDM 64QAM^Edge_1RB_Right:PC2	21.64	24.39
n77	636000	-54	2.1046 RF power output:n77_20MHz_30kHz_636000;48;CP-OFDM 64QAM^Outer_Full:PC2	21.49	24.24
n77	636000	-54	2.1046 RF power output:n77_20MHz_30kHz_636000;49;CP-OFDM 256QAM^Inner_1RB_Left:PC2	18.25	21
n77	636000	-54	2.1046 RF power output:n77_20MHz_30kHz_636000;50;CP-OFDM 256QAM^Inner_1RB_Right:PC2	17.66	20.41
n77	636000	-54	2.1046 RF power output:n77_20MHz_30kHz_636000;51;CP-OFDM 256QAM^Inner_Full:PC2	18.44	21.19
n77	636000	-54	2.1046 RF power output:n77_20MHz_30kHz_636000;52;CP-OFDM 256QAM^Edge_1RB_Left:PC2	17.98	20.73
n77	636000	-54	2.1046 RF power output:n77_20MHz_30kHz_636000;53;CP-OFDM 256QAM^Edge_1RB_Right:PC2	17.4	20.15
n77	636000	-54	2.1046 RF power output:n77_20MHz_30kHz_636000;54;CP-OFDM 256QAM^Outer_Full:PC2	18.13	20.88
n77	630834	-53	2.1046 RF power output:n77_25MHz_30kHz_630834;1;DFT-s-OFDM PI/2 BPSK^Inner_1RB_Left:PC2	23.4	26.15
n77	630834	-53	2.1046 RF power output:n77_25MHz_30kHz_630834;2;DFT-s-OFDM PI/2 BPSK^Inner_1RB_Right:PC2	23.39	26.14
n77	630834	-53	2.1046 RF power output:n77_25MHz_30kHz_630834;3;DFT-s-OFDM PI/2 BPSK^Inner_Full:PC2	24.57	27.32
n77	630834	-53	2.1046 RF power output:n77_25MHz_30kHz_630834;4;DFT-s-OFDM PI/2 BPSK^Edge_1RB_Left:PC2	20.75	23.5
n77	630834	-53	2.1046 RF power output:n77_25MHz_30kHz_630834;5;DFT-s-OFDM PI/2 BPSK^Edge_1RB_Right:PC2	20.74	23.49
n77	630834	-53	2.1046 RF power output:n77_25MHz_30kHz_630834;6;DFT-s-OFDM PI/2 BPSK^Outer_Full:PC2	24.01	26.76
n77	630834	-53	2.1046 RF power output:n77_25MHz_30kHz_630834;7;DFT-s-OFDM QPSK^Inner_1RB_Left:PC2	23.46	26.21
n77	630834	-53	2.1046 RF power output:n77_25MHz_30kHz_630834;8;DFT-s-OFDM QPSK^Inner_1RB_Right:PC2	23.41	26.16
n77	630834	-53	2.1046 RF power output:n77_25MHz_30kHz_630834;9;DFT-s-OFDM QPSK^Inner_Full:PC2	24.57	27.32
n77	630834	-53	2.1046 RF power output:n77_25MHz_30kHz_630834;10;DFT-s-OFDM QPSK^Edge_1RB_Left:PC2	20.82	23.57
n77	630834	-53	2.1046 RF power output:n77_25MHz_30kHz_630834;11;DFT-s-OFDM QPSK^Edge_1RB_Right:PC2	20.76	23.51
n77	630834	-53	2.1046 RF power output:n77_25MHz_30kHz_630834;12;DFT-s-OFDM QPSK^Outer_Full:PC2	23.31	26.06
n77	630834	-53	2.1046 RF power output:n77_25MHz_30kHz_630834;13;DFT-s-OFDM 16QAM^Inner_1RB_Left:PC2	22.43	25.18
n77	630834	-53	2.1046 RF power output:n77_25MHz_30kHz_630834;14;DFT-s-OFDM 16QAM^Inner_1RB_Right:PC2	22.4	25.15
n77	630834	-53	2.1046 RF power output:n77_25MHz_30kHz_630834;15;DFT-s-OFDM 16QAM^Inner_Full:PC2	23.36	26.11
n77	630834	-53	2.1046 RF power output:n77_25MHz_30kHz_630834;16;DFT-s-OFDM 16QAM^Edge_1RB_Left:PC2	20.98	23.73
n77	630834	-53	2.1046 RF power output:n77_25MHz_30kHz_630834;17;DFT-s-OFDM 16QAM^Edge_1RB_Right:PC2	20.94	23.69
n77	630834	-53	2.1046 RF power output:n77_25MHz_30kHz_630834;18;DFT-s-OFDM 16QAM^Outer_Full:PC2	22.24	24.99
n77	630834	-53	2.1046 RF power output:n77_25MHz_30kHz_630834;19;DFT-s-OFDM 64QAM^Inner_1RB_Left:PC2	21.29	24.04
n77	630834	-53	2.1046 RF power output:n77_25MHz_30kHz_630834;20;DFT-s-OFDM 64QAM^Inner_1RB_Right:PC2	21.26	24.01
n77	630834	-53	2.1046 RF power output:n77_25MHz_30kHz_630834;21;DFT-s-OFDM 64QAM^Inner_Full:PC2	22.34	25.09
n77	630834	-53	2.1046 RF power output:n77_25MHz_30kHz_630834;22;DFT-s-OFDM 64QAM^Edge_1RB_Left:PC2	20.87	23.62
n77	630834	-53	2.1046 RF power output:n77_25MHz_30kHz_630834;23;DFT-s-OFDM 64QAM^Edge_1RB_Right:PC2	20.85	23.6
n77	630834	-53	2.1046 RF power output:n77_25MHz_30kHz_630834;24;DFT-s-OFDM 64QAM^Outer_Full:PC2	21.77	24.52
n77	630834	-53	2.1046 RF power output:n77_25MHz_30kHz_630834;25;DFT-s-OFDM 256QAM^Inner_1RB_Left:PC2	18.02	20.77
n77	630834	-53	2.1046 RF power output:n77_25MHz_30kHz_630834;26;DFT-s-OFDM 256QAM^Inner_1RB_Right:PC2	17.99	20.74
n77	630834	-53	2.1046 RF power output:n77_25MHz_30kHz_630834;27;DFT-s-OFDM 256QAM^Inner_Full:PC2	19.62	22.37
n77	630834	-53	2.1046 RF power output:n77_25MHz_30kHz_630834;28;DFT-s-OFDM 256QAM^Edge_1RB_Left:PC2	17.6	20.35
n77	630834	-53	2.1046 RF power output:n77_25MHz_30kHz_630834;29;DFT-s-OFDM 256QAM^Edge_1RB_Right:PC2	17.58	20.33
n77	630834	-53	2.1046 RF power output:n77_25MHz_30kHz_630834;30;DFT-s-OFDM 256QAM^Outer_Full:PC2	18.96	21.71
n77	630834	-53	2.1046 RF power output:n77_25MHz_30kHz_630834;31;CP-OFDM QPSK^Inner_1RB_Left:PC2	21.71	24.46
n77	630834	-53	2.1046 RF power output:n77_25MHz_30kHz_630834;32;CP-OFDM QPSK^Inner_1RB_Right:PC2	21.65	24.4
n77	630834	-53	2.1046 RF power output:n77_25MHz_30kHz_630834;33;CP-OFDM QPSK^Inner_Full:PC2	22.88	25.63
n77	630834	-53	2.1046 RF power output:n77_25MHz_30kHz_630834;34;CP-OFDM QPSK^Edge_1RB_Left:PC2	19.67	22.42
n77	630834	-53	2.1046 RF power output:n77_25MHz_30kHz_630834;35;CP-OFDM QPSK^Edge_1RB_Right:PC2	19.65	22.4
n77	630834	-53	2.1046 RF power output:n77_25MHz_30kHz_630834;36;CP-OFDM QPSK^Outer_Full:PC2	21.17	23.92
n77	630834	-53	2.1046 RF power output:n77_25MHz_30kHz_630834;37;CP-OFDM 16QAM^Inner_1RB_Left:PC2	21.54	24.29
n77	630834	-53	2.1046 RF power output:n77_25MHz_30kHz_630834;38;CP-OFDM 16QAM^Inner_1RB_Right:PC2	21.5	24.25
n77	630834	-53	2.1046 RF power output:n77_25MHz_30kHz_630834;39;CP-OFDM 16QAM^Inner_Full:PC2	22.33	25.08
n77	630834	-53	2.1046 RF power output:n77_25MHz_30kHz_630834;40;CP-OFDM 16QAM^Edge_1RB_Left:PC2	21.11	23.86
n77	630834	-53	2.1046 RF power output:n77_25MHz_30kHz_630834;41;CP-OFDM 16QAM^Edge_1RB_Right:PC2	21.08	23.83
n77	630834	-53	2.1046 RF power output:n77_25MHz_30kHz_630834;42;CP-OFDM 16QAM^Outer_Full:PC2	21.15	23.9

Band	Channel	Cell Power	Test Item	Measured Value	EIRP
n77	630834	-53	2.1046 RF power output:n77_25MHz_30kHz_630834;43;CP-OFDM 64QAM^Inner_1RB_Left:PC2	20.92	23.67
n77	630834	-53	2.1046 RF power output:n77_25MHz_30kHz_630834;44;CP-OFDM 64QAM^Inner_1RB_Right:PC2	20.89	23.64
n77	630834	-53	2.1046 RF power output:n77_25MHz_30kHz_630834;45;CP-OFDM 64QAM^Inner_Full:PC2	21.82	24.57
n77	630834	-53	2.1046 RF power output:n77_25MHz_30kHz_630834;46;CP-OFDM 64QAM^Edge_1RB_Left:PC2	20.48	23.23
n77	630834	-53	2.1046 RF power output:n77_25MHz_30kHz_630834;47;CP-OFDM 64QAM^Edge_1RB_Right:PC2	20.47	23.22
n77	630834	-53	2.1046 RF power output:n77_25MHz_30kHz_630834;48;CP-OFDM 64QAM^Outer_Full:PC2	20.68	23.43
n77	630834	-53	2.1046 RF power output:n77_25MHz_30kHz_630834;49;CP-OFDM 256QAM^Inner_1RB_Left:PC2	16.16	18.91
n77	630834	-53	2.1046 RF power output:n77_25MHz_30kHz_630834;50;CP-OFDM 256QAM^Inner_1RB_Right:PC2	16.1	18.85
n77	630834	-53	2.1046 RF power output:n77_25MHz_30kHz_630834;51;CP-OFDM 256QAM^Inner_Full:PC2	17.56	20.31
n77	630834	-53	2.1046 RF power output:n77_25MHz_30kHz_630834;52;CP-OFDM 256QAM^Edge_1RB_Left:PC2	15.71	18.46
n77	630834	-53	2.1046 RF power output:n77_25MHz_30kHz_630834;53;CP-OFDM 256QAM^Edge_1RB_Right:PC2	15.67	18.42
n77	630834	-53	2.1046 RF power output:n77_25MHz_30kHz_630834;54;CP-OFDM 256QAM^Outer_Full:PC2	17	19.75
n77	633334	-53	2.1046 RF power output:n77_25MHz_30kHz_633334;1;DFT-s-OFDM PI/2 BPSK^Inner_1RB_Left:PC2	23.21	25.96
n77	633334	-53	2.1046 RF power output:n77_25MHz_30kHz_633334;2;DFT-s-OFDM PI/2 BPSK^Inner_1RB_Right:PC2	22.83	25.58
n77	633334	-53	2.1046 RF power output:n77_25MHz_30kHz_633334;3;DFT-s-OFDM PI/2 BPSK^Inner_Full:PC2	24.23	26.98
n77	633334	-53	2.1046 RF power output:n77_25MHz_30kHz_633334;4;DFT-s-OFDM PI/2 BPSK^Edge_1RB_Left:PC2	20.54	23.29
n77	633334	-53	2.1046 RF power output:n77_25MHz_30kHz_633334;5;DFT-s-OFDM PI/2 BPSK^Edge_1RB_Right:PC2	20.19	22.94
n77	633334	-53	2.1046 RF power output:n77_25MHz_30kHz_633334;6;DFT-s-OFDM PI/2 BPSK^Outer_Full:PC2	23.66	26.41
n77	633334	-53	2.1046 RF power output:n77_25MHz_30kHz_633334;7;DFT-s-OFDM QPSK^Inner_1RB_Left:PC2	23.25	26
n77	633334	-53	2.1046 RF power output:n77_25MHz_30kHz_633334;8;DFT-s-OFDM QPSK^Inner_1RB_Right:PC2	22.85	25.6
n77	633334	-53	2.1046 RF power output:n77_25MHz_30kHz_633334;9;DFT-s-OFDM QPSK^Inner_Full:PC2	24.21	26.96
n77	633334	-53	2.1046 RF power output:n77_25MHz_30kHz_633334;10;DFT-s-OFDM QPSK^Edge_1RB_Left:PC2	20.72	23.47
n77	633334	-53	2.1046 RF power output:n77_25MHz_30kHz_633334;11;DFT-s-OFDM QPSK^Edge_1RB_Right:PC2	20.33	23.08
n77	633334	-53	2.1046 RF power output:n77_25MHz_30kHz_633334;12;DFT-s-OFDM QPSK^Outer_Full:PC2	22.95	25.7
n77	633334	-53	2.1046 RF power output:n77_25MHz_30kHz_633334;13;DFT-s-OFDM 16QAM^Inner_1RB_Left:PC2	22.23	24.98
n77	633334	-53	2.1046 RF power output:n77_25MHz_30kHz_633334;14;DFT-s-OFDM 16QAM^Inner_1RB_Right:PC2	21.84	24.59
n77	633334	-53	2.1046 RF power output:n77_25MHz_30kHz_633334;15;DFT-s-OFDM 16QAM^Inner_Full:PC2	23.02	25.77
n77	633334	-53	2.1046 RF power output:n77_25MHz_30kHz_633334;16;DFT-s-OFDM 16QAM^Edge_1RB_Left:PC2	20.89	23.64
n77	633334	-53	2.1046 RF power output:n77_25MHz_30kHz_633334;17;DFT-s-OFDM 16QAM^Edge_1RB_Right:PC2	20.5	23.25
n77	633334	-53	2.1046 RF power output:n77_25MHz_30kHz_633334;18;DFT-s-OFDM 16QAM^Outer_Full:PC2	22.01	24.76
n77	633334	-53	2.1046 RF power output:n77_25MHz_30kHz_633334;19;DFT-s-OFDM 64QAM^Inner_1RB_Left:PC2	21.19	23.94
n77	633334	-53	2.1046 RF power output:n77_25MHz_30kHz_633334;20;DFT-s-OFDM 64QAM^Inner_1RB_Right:PC2	20.82	23.57
n77	633334	-53	2.1046 RF power output:n77_25MHz_30kHz_633334;21;DFT-s-OFDM 64QAM^Inner_Full:PC2	22.11	24.86
n77	633334	-53	2.1046 RF power output:n77_25MHz_30kHz_633334;22;DFT-s-OFDM 64QAM^Edge_1RB_Left:PC2	20.77	23.52
n77	633334	-53	2.1046 RF power output:n77_25MHz_30kHz_633334;23;DFT-s-OFDM 64QAM^Edge_1RB_Right:PC2	20.3	23.05
n77	633334	-53	2.1046 RF power output:n77_25MHz_30kHz_633334;24;DFT-s-OFDM 64QAM^Outer_Full:PC2	21.54	24.29
n77	633334	-53	2.1046 RF power output:n77_25MHz_30kHz_633334;25;DFT-s-OFDM 256QAM^Inner_1RB_Left:PC2	18.64	21.39
n77	633334	-53	2.1046 RF power output:n77_25MHz_30kHz_633334;26;DFT-s-OFDM 256QAM^Inner_1RB_Right:PC2	18.27	21.02
n77	633334	-53	2.1046 RF power output:n77_25MHz_30kHz_633334;27;DFT-s-OFDM 256QAM^Inner_Full:PC2	19.74	22.49
n77	633334	-53	2.1046 RF power output:n77_25MHz_30kHz_633334;28;DFT-s-OFDM 256QAM^Edge_1RB_Left:PC2	18.23	20.98
n77	633334	-53	2.1046 RF power output:n77_25MHz_30kHz_633334;29;DFT-s-OFDM 256QAM^Edge_1RB_Right:PC2	17.88	20.63
n77	633334	-53	2.1046 RF power output:n77_25MHz_30kHz_633334;30;DFT-s-OFDM 256QAM^Outer_Full:PC2	19.07	21.82
n77	633334	-53	2.1046 RF power output:n77_25MHz_30kHz_633334;31;CP-OFDM QPSK^Inner_1RB_Left:PC2	21.64	24.39
n77	633334	-53	2.1046 RF power output:n77_25MHz_30kHz_633334;32;CP-OFDM QPSK^Inner_1RB_Right:PC2	21.27	24.02
n77	633334	-53	2.1046 RF power output:n77_25MHz_30kHz_633334;33;CP-OFDM QPSK^Inner_Full:PC2	22.7	25.45
n77	633334	-53	2.1046 RF power output:n77_25MHz_30kHz_633334;34;CP-OFDM QPSK^Edge_1RB_Left:PC2	19.88	22.63
n77	633334	-53	2.1046 RF power output:n77_25MHz_30kHz_633334;35;CP-OFDM QPSK^Edge_1RB_Right:PC2	19.53	22.28
n77	633334	-53	2.1046 RF power output:n77_25MHz_30kHz_633334;36;CP-OFDM QPSK^Outer_Full:PC2	21.23	23.98
n77	633334	-53	2.1046 RF power output:n77_25MHz_30kHz_633334;37;CP-OFDM 16QAM^Inner_1RB_Left:PC2	21.46	24.21
n77	633334	-53	2.1046 RF power output:n77_25MHz_30kHz_633334;38;CP-OFDM 16QAM^Inner_1RB_Right:PC2	21.07	23.82
n77	633334	-53	2.1046 RF power output:n77_25MHz_30kHz_633334;39;CP-OFDM 16QAM^Inner_Full:PC2	22.09	24.84
n77	633334	-53	2.1046 RF power output:n77_25MHz_30kHz_633334;40;CP-OFDM 16QAM^Edge_1RB_Left:PC2	21.03	23.78
n77	633334	-53	2.1046 RF power output:n77_25MHz_30kHz_633334;41;CP-OFDM 16QAM^Edge_1RB_Right:PC2	20.66	23.41
n77	633334	-53	2.1046 RF power output:n77_25MHz_30kHz_633334;42;CP-OFDM 16QAM^Outer_Full:PC2	21.21	23.96
n77	633334	-53	2.1046 RF power output:n77_25MHz_30kHz_633334;43;CP-OFDM 64QAM^Inner_1RB_Left:PC2	20.84	23.59
n77	633334	-53	2.1046 RF power output:n77_25MHz_30kHz_633334;44;CP-OFDM 64QAM^Inner_1RB_Right:PC2	20.47	23.22
n77	633334	-53	2.1046 RF power output:n77_25MHz_30kHz_633334;45;CP-OFDM 64QAM^Inner_Full:PC2	21.59	24.34
n77	633334	-53	2.1046 RF power output:n77_25MHz_30kHz_633334;46;CP-OFDM 64QAM^Edge_1RB_Left:PC2	20.41	23.16
n77	633334	-53	2.1046 RF power output:n77_25MHz_30kHz_633334;47;CP-OFDM 64QAM^Edge_1RB_Right:PC2	20.06	22.81
n77	633334	-53	2.1046 RF power output:n77_25MHz_30kHz_633334;48;CP-OFDM 64QAM^Outer_Full:PC2	20.74	23.49
n77	633334	-53	2.1046 RF power output:n77_25MHz_30kHz_633334;49;CP-OFDM 256QAM^Inner_1RB_Left:PC2	16.47	19.22
n77	633334	-53	2.1046 RF power output:n77_25MHz_30kHz_633334;50;CP-OFDM 256QAM^Inner_1RB_Right:PC2	16.08	18.83
n77	633334	-53	2.1046 RF power output:n77_25MHz_30kHz_633334;51;CP-OFDM 256QAM^Inner_Full:PC2	17.71	20.46
n77	633334	-53	2.1046 RF power output:n77_25MHz_30kHz_633334;52;CP-OFDM 256QAM^Edge_1RB_Left:PC2	16.04	18.79
n77	633334	-53	2.1046 RF power output:n77_25MHz_30kHz_633334;53;CP-OFDM 256QAM^Edge_1RB_Right:PC2	15.67	18.42
n77	633334	-53	2.1046 RF power output:n77_25MHz_30kHz_633334;54;CP-OFDM 256QAM^Outer_Full:PC2	16.96	19.71
n77	635834	-53	2.1046 RF power output:n77_25MHz_30kHz_635834;1;DFT-s-OFDM PI/2 BPSK^Inner_1RB_Left:PC2	23.15	25.9
n77	635834	-53	2.1046 RF power output:n77_25MHz_30kHz_635834;2;DFT-s-OFDM PI/2 BPSK^Inner_1RB_Right:PC2	22.44	25.19
n77	635834	-53	2.1046 RF power output:n77_25MHz_30kHz_635834;3;DFT-s-OFDM PI/2 BPSK^Inner_Full:PC2	23.74	26.49
n77	635834	-53	2.1046 RF power output:n77_25MHz_30kHz_635834;4;DFT-s-OFDM PI/2 BPSK^Edge_1RB_Left:PC2	20.46	23.21
n77	635834	-53	2.1046 RF power output:n77_25MHz_30kHz_635834;5;DFT-s-OFDM PI/2 BPSK^Edge_1RB_Right:PC2	19.77	22.52
n77	635834	-53	2.1046 RF power output:n77_25MHz_30kHz_635834;6;DFT-s-OFDM PI/2 BPSK^Outer_Full:PC2	23.24	25.99
n77	635834	-53	2.1046 RF power output:n77_25MHz_30kHz_635834;7;DFT-s-OFDM QPSK^Inner_1RB_Left:PC2	23.17	25.92
n77	635834	-53	2.1046 RF power output:n77_25MHz_30kHz_635834;8;DFT-s-OFDM QPSK^Inner_1RB_Right:PC2	22.44	25.19
n77	635834	-53	2.1046 RF power output:n77_25MHz_30kHz_635834;9;DFT-s-OFDM QPSK^Inner_Full:PC2	23.72	26.47
n77	635834	-53	2.1046 RF power output:n77_25MHz_30kHz_635834;10;DFT-s-OFDM QPSK^Edge_1RB_Left:PC2	20.51	23.26
n77	635834	-53	2.1046 RF power output:n77_25MHz_30kHz_635834;11;DFT-s-OFDM QPSK^Edge_1RB_Right:PC2	19.79	22.54
n77	635834	-53	2.1046 RF power output:n77_25MHz_30kHz_635834;12;DFT-s-OFDM QPSK^Outer_Full:PC2	22.51	25.26
n77	635834	-53	2.1046 RF power output:n77_25MHz_30kHz_635834;13;DFT-s-OFDM 16QAM^Inner_1RB_Left:PC2	21.99	24.74
n77	635834	-53	2.1046 RF power output:n77_25MHz_30kHz_635834;14;DFT-s-OFDM 16QAM^Inner_1RB_Right:PC2	21.27	24.02
n77	635834	-53	2.1046 RF power output:n77_25MHz_30kHz_635834;15;DFT-s-OFDM 16QAM^Inner_Full:PC2	22.5	25.25
n77	635834	-53	2.1046 RF power output:n77_25MHz_30kHz_635834;16;DFT-s-OFDM 16QAM^Edge_1RB_Left:PC2	20.55	23.3
n77	635834	-53	2.1046 RF power output:n77_25MHz_30kHz_635834;17;DFT-s-OFDM 16QAM^Edge_1RB_Right:PC2	19.83	22.58
n77	635834	-53	2.1046 RF power output:n77_25MHz_30kHz_635834;18;DFT-s-OFDM 16QAM^Outer_Full:PC2	21.45	24.2
n77	635834	-53	2.1046 RF power output:n77_25MHz_30kHz_635834;19;DFT-s-OFDM 64QAM^Inner_1RB_Left:PC2	20.92	23.67
n77	635834	-53	2.1046 RF power output:n77_25MHz_30kHz_635834;20;DFT-s-OFDM 64QAM^Inner_1RB_Right:PC2	20.22	22.97
n77	635834	-53	2.1046 RF power output:n77_25MHz_30kHz_635834;21;DFT-s-OFDM 64QAM^Inner_Full:PC2	21.46	24.21
n77	635834	-53	2.1046 RF power output:n77_25MHz_30kHz_635834;22;DFT-s-OFDM 64QAM^Edge_1RB_Left:PC2	20.51	23.26

Band	Channel	Cell Power	Test Item	Measured Value	EIRP
n77	635834	-53	2.1046 RF power output:n77_25MHz_30kHz_635834;23;DFT-s-OFDM 64QAM^Edge_1RB_Right:PC2	19.84	22.59
n77	635834	-53	2.1046 RF power output:n77_25MHz_30kHz_635834;24;DFT-s-OFDM 64QAM^Outer_Full:PC2	20.97	23.72
n77	635834	-53	2.1046 RF power output:n77_25MHz_30kHz_635834;25;DFT-s-OFDM 256QAM^Inner_1RB_Left:PC2	18.15	20.9
n77	635834	-53	2.1046 RF power output:n77_25MHz_30kHz_635834;26;DFT-s-OFDM 256QAM^Inner_1RB_Right:PC2	17.46	20.21
n77	635834	-53	2.1046 RF power output:n77_25MHz_30kHz_635834;27;DFT-s-OFDM 256QAM^Inner_Full:PC2	18.97	21.72
n77	635834	-53	2.1046 RF power output:n77_25MHz_30kHz_635834;28;DFT-s-OFDM 256QAM^Edge_1RB_Left:PC2	17.77	20.52
n77	635834	-53	2.1046 RF power output:n77_25MHz_30kHz_635834;29;DFT-s-OFDM 256QAM^Edge_1RB_Right:PC2	17.07	19.82
n77	635834	-53	2.1046 RF power output:n77_25MHz_30kHz_635834;30;DFT-s-OFDM 256QAM^Outer_Full:PC2	18.38	21.13
n77	635834	-53	2.1046 RF power output:n77_25MHz_30kHz_635834;31;CP-OFDM QPSK^Inner_1RB_Left:PC2	21.46	24.21
n77	635834	-53	2.1046 RF power output:n77_25MHz_30kHz_635834;32;CP-OFDM QPSK^Inner_1RB_Right:PC2	20.75	23.5
n77	635834	-53	2.1046 RF power output:n77_25MHz_30kHz_635834;33;CP-OFDM QPSK^Inner_Full:PC2	22.02	24.77
n77	635834	-53	2.1046 RF power output:n77_25MHz_30kHz_635834;34;CP-OFDM QPSK^Edge_1RB_Left:PC2	19.61	22.36
n77	635834	-53	2.1046 RF power output:n77_25MHz_30kHz_635834;35;CP-OFDM QPSK^Edge_1RB_Right:PC2	18.94	21.69
n77	635834	-53	2.1046 RF power output:n77_25MHz_30kHz_635834;36;CP-OFDM QPSK^Outer_Full:PC2	20.54	23.29
n77	635834	-53	2.1046 RF power output:n77_25MHz_30kHz_635834;37;CP-OFDM 16QAM^Inner_1RB_Left:PC2	21.11	23.86
n77	635834	-53	2.1046 RF power output:n77_25MHz_30kHz_635834;38;CP-OFDM 16QAM^Inner_1RB_Right:PC2	20.39	23.14
n77	635834	-53	2.1046 RF power output:n77_25MHz_30kHz_635834;39;CP-OFDM 16QAM^Inner_Full:PC2	21.46	24.21
n77	635834	-53	2.1046 RF power output:n77_25MHz_30kHz_635834;40;CP-OFDM 16QAM^Edge_1RB_Left:PC2	20.69	23.44
n77	635834	-53	2.1046 RF power output:n77_25MHz_30kHz_635834;41;CP-OFDM 16QAM^Edge_1RB_Right:PC2	20	22.75
n77	635834	-53	2.1046 RF power output:n77_25MHz_30kHz_635834;42;CP-OFDM 16QAM^Outer_Full:PC2	20.51	23.26
n77	635834	-53	2.1046 RF power output:n77_25MHz_30kHz_635834;43;CP-OFDM 64QAM^Inner_1RB_Left:PC2	20.56	23.31
n77	635834	-53	2.1046 RF power output:n77_25MHz_30kHz_635834;44;CP-OFDM 64QAM^Inner_1RB_Right:PC2	19.86	22.61
n77	635834	-53	2.1046 RF power output:n77_25MHz_30kHz_635834;45;CP-OFDM 64QAM^Inner_Full:PC2	20.94	23.69
n77	635834	-53	2.1046 RF power output:n77_25MHz_30kHz_635834;46;CP-OFDM 64QAM^Edge_1RB_Left:PC2	20.15	22.9
n77	635834	-53	2.1046 RF power output:n77_25MHz_30kHz_635834;47;CP-OFDM 64QAM^Edge_1RB_Right:PC2	19.46	22.21
n77	635834	-53	2.1046 RF power output:n77_25MHz_30kHz_635834;48;CP-OFDM 64QAM^Outer_Full:PC2	20.05	22.8
n77	635834	-53	2.1046 RF power output:n77_25MHz_30kHz_635834;49;CP-OFDM 256QAM^Inner_1RB_Left:PC2	16.16	18.91
n77	635834	-53	2.1046 RF power output:n77_25MHz_30kHz_635834;50;CP-OFDM 256QAM^Inner_1RB_Right:PC2	15.44	18.19
n77	635834	-53	2.1046 RF power output:n77_25MHz_30kHz_635834;51;CP-OFDM 256QAM^Inner_Full:PC2	16.94	19.69
n77	635834	-53	2.1046 RF power output:n77_25MHz_30kHz_635834;52;CP-OFDM 256QAM^Edge_1RB_Left:PC2	15.75	18.5
n77	635834	-53	2.1046 RF power output:n77_25MHz_30kHz_635834;53;CP-OFDM 256QAM^Edge_1RB_Right:PC2	15.06	17.81
n77	635834	-53	2.1046 RF power output:n77_25MHz_30kHz_635834;54;CP-OFDM 256QAM^Outer_Full:PC2	16.29	19.04
n77	631000	-52	2.1046 RF power output:n77_30MHz_30kHz_631000;1;DFT-s-OFDM PI/2 BPSK^Inner_1RB_Left:PC2	25.94	28.69
n77	631000	-52	2.1046 RF power output:n77_30MHz_30kHz_631000;2;DFT-s-OFDM PI/2 BPSK^Inner_1RB_Right:PC2	25.89	28.64
n77	631000	-52	2.1046 RF power output:n77_30MHz_30kHz_631000;3;DFT-s-OFDM PI/2 BPSK^Inner_Full:PC2	26.14	28.89
n77	631000	-52	2.1046 RF power output:n77_30MHz_30kHz_631000;4;DFT-s-OFDM PI/2 BPSK^Edge_1RB_Left:PC2	23.45	26.2
n77	631000	-52	2.1046 RF power output:n77_30MHz_30kHz_631000;5;DFT-s-OFDM PI/2 BPSK^Edge_1RB_Right:PC2	23.36	26.11
n77	631000	-52	2.1046 RF power output:n77_30MHz_30kHz_631000;6;DFT-s-OFDM PI/2 BPSK^Outer_Full:PC2	26.06	28.81
n77	631000	-52	2.1046 RF power output:n77_30MHz_30kHz_631000;7;DFT-s-OFDM QPSK^Inner_1RB_Left:PC2	25.96	28.71
n77	631000	-52	2.1046 RF power output:n77_30MHz_30kHz_631000;8;DFT-s-OFDM QPSK^Inner_1RB_Right:PC2	25.88	28.63
n77	631000	-52	2.1046 RF power output:n77_30MHz_30kHz_631000;9;DFT-s-OFDM QPSK^Inner_Full:PC2	26.12	28.87
n77	631000	-52	2.1046 RF power output:n77_30MHz_30kHz_631000;10;DFT-s-OFDM QPSK^Edge_1RB_Left:PC2	23.48	26.23
n77	631000	-52	2.1046 RF power output:n77_30MHz_30kHz_631000;11;DFT-s-OFDM QPSK^Edge_1RB_Right:PC2	23.39	26.14
n77	631000	-52	2.1046 RF power output:n77_30MHz_30kHz_631000;12;DFT-s-OFDM QPSK^Outer_Full:PC2	25.25	28
n77	631000	-52	2.1046 RF power output:n77_30MHz_30kHz_631000;13;DFT-s-OFDM 16QAM^Inner_1RB_Left:PC2	24.68	27.43
n77	631000	-52	2.1046 RF power output:n77_30MHz_30kHz_631000;14;DFT-s-OFDM 16QAM^Inner_1RB_Right:PC2	24.63	27.38
n77	631000	-52	2.1046 RF power output:n77_30MHz_30kHz_631000;15;DFT-s-OFDM 16QAM^Inner_Full:PC2	24.87	27.62
n77	631000	-52	2.1046 RF power output:n77_30MHz_30kHz_631000;16;DFT-s-OFDM 16QAM^Edge_1RB_Left:PC2	23.47	26.22
n77	631000	-52	2.1046 RF power output:n77_30MHz_30kHz_631000;17;DFT-s-OFDM 16QAM^Edge_1RB_Right:PC2	23.38	26.13
n77	631000	-52	2.1046 RF power output:n77_30MHz_30kHz_631000;18;DFT-s-OFDM 16QAM^Outer_Full:PC2	24.3	27.05
n77	631000	-52	2.1046 RF power output:n77_30MHz_30kHz_631000;19;DFT-s-OFDM 64QAM^Inner_1RB_Left:PC2	23.64	26.39
n77	631000	-52	2.1046 RF power output:n77_30MHz_30kHz_631000;20;DFT-s-OFDM 64QAM^Inner_1RB_Right:PC2	23.62	26.37
n77	631000	-52	2.1046 RF power output:n77_30MHz_30kHz_631000;21;DFT-s-OFDM 64QAM^Inner_Full:PC2	23.87	26.62
n77	631000	-52	2.1046 RF power output:n77_30MHz_30kHz_631000;22;DFT-s-OFDM 64QAM^Edge_1RB_Left:PC2	23.39	26.14
n77	631000	-52	2.1046 RF power output:n77_30MHz_30kHz_631000;23;DFT-s-OFDM 64QAM^Edge_1RB_Right:PC2	23.31	26.06
n77	631000	-52	2.1046 RF power output:n77_30MHz_30kHz_631000;24;DFT-s-OFDM 64QAM^Outer_Full:PC2	23.81	26.56
n77	631000	-52	2.1046 RF power output:n77_30MHz_30kHz_631000;25;DFT-s-OFDM 256QAM^Inner_1RB_Left:PC2	21.21	23.96
n77	631000	-52	2.1046 RF power output:n77_30MHz_30kHz_631000;26;DFT-s-OFDM 256QAM^Inner_1RB_Right:PC2	21.17	23.92
n77	631000	-52	2.1046 RF power output:n77_30MHz_30kHz_631000;27;DFT-s-OFDM 256QAM^Inner_Full:PC2	21.53	24.28
n77	631000	-52	2.1046 RF power output:n77_30MHz_30kHz_631000;28;DFT-s-OFDM 256QAM^Edge_1RB_Left:PC2	20.95	23.7
n77	631000	-52	2.1046 RF power output:n77_30MHz_30kHz_631000;29;DFT-s-OFDM 256QAM^Edge_1RB_Right:PC2	20.87	23.62
n77	631000	-52	2.1046 RF power output:n77_30MHz_30kHz_631000;30;DFT-s-OFDM 256QAM^Outer_Full:PC2	21.25	24
n77	631000	-52	2.1046 RF power output:n77_30MHz_30kHz_631000;31;CP-OFDM QPSK^Inner_1RB_Left:PC2	24.12	26.87
n77	631000	-52	2.1046 RF power output:n77_30MHz_30kHz_631000;32;CP-OFDM QPSK^Inner_1RB_Right:PC2	24.05	26.8
n77	631000	-52	2.1046 RF power output:n77_30MHz_30kHz_631000;33;CP-OFDM QPSK^Inner_Full:PC2	24.31	27.06
n77	631000	-52	2.1046 RF power output:n77_30MHz_30kHz_631000;34;CP-OFDM QPSK^Edge_1RB_Left:PC2	22.48	25.23
n77	631000	-52	2.1046 RF power output:n77_30MHz_30kHz_631000;35;CP-OFDM QPSK^Edge_1RB_Right:PC2	22.43	25.18
n77	631000	-52	2.1046 RF power output:n77_30MHz_30kHz_631000;36;CP-OFDM QPSK^Outer_Full:PC2	23.32	26.07
n77	631000	-52	2.1046 RF power output:n77_30MHz_30kHz_631000;37;CP-OFDM 16QAM^Inner_1RB_Left:PC2	23.87	26.62
n77	631000	-52	2.1046 RF power output:n77_30MHz_30kHz_631000;38;CP-OFDM 16QAM^Inner_1RB_Right:PC2	23.8	26.55
n77	631000	-52	2.1046 RF power output:n77_30MHz_30kHz_631000;39;CP-OFDM 16QAM^Inner_Full:PC2	23.86	26.61
n77	631000	-52	2.1046 RF power output:n77_30MHz_30kHz_631000;40;CP-OFDM 16QAM^Edge_1RB_Left:PC2	23.6	26.35
n77	631000	-52	2.1046 RF power output:n77_30MHz_30kHz_631000;41;CP-OFDM 16QAM^Edge_1RB_Right:PC2	23.53	26.28
n77	631000	-52	2.1046 RF power output:n77_30MHz_30kHz_631000;42;CP-OFDM 16QAM^Outer_Full:PC2	23.31	26.06
n77	631000	-52	2.1046 RF power output:n77_30MHz_30kHz_631000;43;CP-OFDM 64QAM^Inner_1RB_Left:PC2	23.27	26.02
n77	631000	-52	2.1046 RF power output:n77_30MHz_30kHz_631000;44;CP-OFDM 64QAM^Inner_1RB_Right:PC2	23.21	25.96
n77	631000	-52	2.1046 RF power output:n77_30MHz_30kHz_631000;45;CP-OFDM 64QAM^Inner_Full:PC2	23.42	26.17
n77	631000	-52	2.1046 RF power output:n77_30MHz_30kHz_631000;46;CP-OFDM 64QAM^Edge_1RB_Left:PC2	23.01	25.76
n77	631000	-52	2.1046 RF power output:n77_30MHz_30kHz_631000;47;CP-OFDM 64QAM^Edge_1RB_Right:PC2	22.95	25.7
n77	631000	-52	2.1046 RF power output:n77_30MHz_30kHz_631000;48;CP-OFDM 64QAM^Outer_Full:PC2	22.85	25.6
n77	631000	-52	2.1046 RF power output:n77_30MHz_30kHz_631000;49;CP-OFDM 256QAM^Inner_1RB_Left:PC2	18.99	21.74
n77	631000	-52	2.1046 RF power output:n77_30MHz_30kHz_631000;50;CP-OFDM 256QAM^Inner_1RB_Right:PC2	18.92	21.67
n77	631000	-52	2.1046 RF power output:n77_30MHz_30kHz_631000;51;CP-OFDM 256QAM^Inner_Full:PC2	19.4	22.15
n77	631000	-52	2.1046 RF power output:n77_30MHz_30kHz_631000;52;CP-OFDM 256QAM^Edge_1RB_Left:PC2	18.71	21.46
n77	631000	-52	2.1046 RF power output:n77_30MHz_30kHz_631000;53;CP-OFDM 256QAM^Edge_1RB_Right:PC2	18.65	21.4
n77	631000	-52	2.1046 RF power output:n77_30MHz_30kHz_631000;54;CP-OFDM 256QAM^Outer_Full:PC2	19.56	22.31
n77	633334	-52	2.1046 RF power output:n77_30MHz_30kHz_633334;1;DFT-s-OFDM PI/2 BPSK^Inner_1RB_Left:PC2	26.12	28.87
n77	633334	-52	2.1046 RF power output:n77_30MHz_30kHz_633334;2;DFT-s-OFDM PI/2 BPSK^Inner_1RB_Right:PC2	25.76	28.51

Band	Channel	Cell Power	Test Item	Measured Value	EIRP
n77	633334	-52	2.1046 RF power output:n77_30MHz_30kHz_633334;3;DFT-s-OFDM PI/2 BPSK^Inner_Full:PC2	26.22	28.97
n77	633334	-52	2.1046 RF power output:n77_30MHz_30kHz_633334;4;DFT-s-OFDM PI/2 BPSK^Edge_1RB_Left:PC2	23.7	26.45
n77	633334	-52	2.1046 RF power output:n77_30MHz_30kHz_633334;5;DFT-s-OFDM PI/2 BPSK^Edge_1RB_Right:PC2	23.32	26.07
n77	633334	-52	2.1046 RF power output:n77_30MHz_30kHz_633334;6;DFT-s-OFDM PI/2 BPSK^Outer_Full:PC2	26.12	28.87
n77	633334	-52	2.1046 RF power output:n77_30MHz_30kHz_633334;7;DFT-s-OFDM QPSK^Inner_1RB_Left:PC2	26.13	28.88
n77	633334	-52	2.1046 RF power output:n77_30MHz_30kHz_633334;8;DFT-s-OFDM QPSK^Inner_1RB_Right:PC2	25.75	28.5
n77	633334	-52	2.1046 RF power output:n77_30MHz_30kHz_633334;9;DFT-s-OFDM QPSK^Inner_Full:PC2	26.2	28.95
n77	633334	-52	2.1046 RF power output:n77_30MHz_30kHz_633334;10;DFT-s-OFDM QPSK^Edge_1RB_Left:PC2	23.72	26.47
n77	633334	-52	2.1046 RF power output:n77_30MHz_30kHz_633334;11;DFT-s-OFDM QPSK^Edge_1RB_Right:PC2	23.34	26.09
n77	633334	-52	2.1046 RF power output:n77_30MHz_30kHz_633334;12;DFT-s-OFDM QPSK^Outer_Full:PC2	25.44	28.19
n77	633334	-52	2.1046 RF power output:n77_30MHz_30kHz_633334;13;DFT-s-OFDM 16QAM^Inner_1RB_Left:PC2	24.98	27.73
n77	633334	-52	2.1046 RF power output:n77_30MHz_30kHz_633334;14;DFT-s-OFDM 16QAM^Inner_1RB_Right:PC2	24.6	27.35
n77	633334	-52	2.1046 RF power output:n77_30MHz_30kHz_633334;15;DFT-s-OFDM 16QAM^Inner_Full:PC2	25.06	27.81
n77	633334	-52	2.1046 RF power output:n77_30MHz_30kHz_633334;16;DFT-s-OFDM 16QAM^Edge_1RB_Left:PC2	23.7	26.45
n77	633334	-52	2.1046 RF power output:n77_30MHz_30kHz_633334;17;DFT-s-OFDM 16QAM^Edge_1RB_Right:PC2	23.31	26.06
n77	633334	-52	2.1046 RF power output:n77_30MHz_30kHz_633334;18;DFT-s-OFDM 16QAM^Outer_Full:PC2	24.42	27.17
n77	633334	-52	2.1046 RF power output:n77_30MHz_30kHz_633334;19;DFT-s-OFDM 64QAM^Inner_1RB_Left:PC2	23.99	26.74
n77	633334	-52	2.1046 RF power output:n77_30MHz_30kHz_633334;20;DFT-s-OFDM 64QAM^Inner_1RB_Right:PC2	23.65	26.4
n77	633334	-52	2.1046 RF power output:n77_30MHz_30kHz_633334;21;DFT-s-OFDM 64QAM^Inner_Full:PC2	24.04	26.79
n77	633334	-52	2.1046 RF power output:n77_30MHz_30kHz_633334;22;DFT-s-OFDM 64QAM^Edge_1RB_Left:PC2	23.74	26.49
n77	633334	-52	2.1046 RF power output:n77_30MHz_30kHz_633334;23;DFT-s-OFDM 64QAM^Edge_1RB_Right:PC2	23.34	26.09
n77	633334	-52	2.1046 RF power output:n77_30MHz_30kHz_633334;24;DFT-s-OFDM 64QAM^Outer_Full:PC2	23.95	26.7
n77	633334	-52	2.1046 RF power output:n77_30MHz_30kHz_633334;25;DFT-s-OFDM 256QAM^Inner_1RB_Left:PC2	21.38	24.13
n77	633334	-52	2.1046 RF power output:n77_30MHz_30kHz_633334;26;DFT-s-OFDM 256QAM^Inner_1RB_Right:PC2	21.03	23.78
n77	633334	-52	2.1046 RF power output:n77_30MHz_30kHz_633334;27;DFT-s-OFDM 256QAM^Inner_Full:PC2	21.61	24.36
n77	633334	-52	2.1046 RF power output:n77_30MHz_30kHz_633334;28;DFT-s-OFDM 256QAM^Edge_1RB_Left:PC2	21.12	23.87
n77	633334	-52	2.1046 RF power output:n77_30MHz_30kHz_633334;29;DFT-s-OFDM 256QAM^Edge_1RB_Right:PC2	20.74	23.49
n77	633334	-52	2.1046 RF power output:n77_30MHz_30kHz_633334;30;DFT-s-OFDM 256QAM^Outer_Full:PC2	21.39	24.14
n77	633334	-52	2.1046 RF power output:n77_30MHz_30kHz_633334;31;CP-OFDM QPSK^Inner_1RB_Left:PC2	24.56	27.31
n77	633334	-52	2.1046 RF power output:n77_30MHz_30kHz_633334;32;CP-OFDM QPSK^Inner_1RB_Right:PC2	24.19	26.94
n77	633334	-52	2.1046 RF power output:n77_30MHz_30kHz_633334;33;CP-OFDM QPSK^Inner_Full:PC2	24.52	27.27
n77	633334	-52	2.1046 RF power output:n77_30MHz_30kHz_633334;34;CP-OFDM QPSK^Edge_1RB_Left:PC2	22.85	25.6
n77	633334	-52	2.1046 RF power output:n77_30MHz_30kHz_633334;35;CP-OFDM QPSK^Edge_1RB_Right:PC2	22.5	25.25
n77	633334	-52	2.1046 RF power output:n77_30MHz_30kHz_633334;36;CP-OFDM QPSK^Outer_Full:PC2	23.47	26.22
n77	633334	-52	2.1046 RF power output:n77_30MHz_30kHz_633334;37;CP-OFDM 16QAM^Inner_1RB_Left:PC2	24.16	26.91
n77	633334	-52	2.1046 RF power output:n77_30MHz_30kHz_633334;38;CP-OFDM 16QAM^Inner_1RB_Right:PC2	23.79	26.54
n77	633334	-52	2.1046 RF power output:n77_30MHz_30kHz_633334;39;CP-OFDM 16QAM^Inner_Full:PC2	24.01	26.76
n77	633334	-52	2.1046 RF power output:n77_30MHz_30kHz_633334;40;CP-OFDM 16QAM^Edge_1RB_Left:PC2	23.89	26.64
n77	633334	-52	2.1046 RF power output:n77_30MHz_30kHz_633334;41;CP-OFDM 16QAM^Edge_1RB_Right:PC2	23.54	26.29
n77	633334	-52	2.1046 RF power output:n77_30MHz_30kHz_633334;42;CP-OFDM 16QAM^Outer_Full:PC2	23.47	26.22
n77	633334	-52	2.1046 RF power output:n77_30MHz_30kHz_633334;43;CP-OFDM 64QAM^Inner_1RB_Left:PC2	23.79	26.54
n77	633334	-52	2.1046 RF power output:n77_30MHz_30kHz_633334;44;CP-OFDM 64QAM^Inner_1RB_Right:PC2	23.4	26.15
n77	633334	-52	2.1046 RF power output:n77_30MHz_30kHz_633334;45;CP-OFDM 64QAM^Inner_Full:PC2	23.57	26.32
n77	633334	-52	2.1046 RF power output:n77_30MHz_30kHz_633334;46;CP-OFDM 64QAM^Edge_1RB_Left:PC2	23.51	26.26
n77	633334	-52	2.1046 RF power output:n77_30MHz_30kHz_633334;47;CP-OFDM 64QAM^Edge_1RB_Right:PC2	23.15	25.9
n77	633334	-52	2.1046 RF power output:n77_30MHz_30kHz_633334;48;CP-OFDM 64QAM^Outer_Full:PC2	23	25.75
n77	633334	-52	2.1046 RF power output:n77_30MHz_30kHz_633334;49;CP-OFDM 256QAM^Inner_1RB_Left:PC2	19.29	22.04
n77	633334	-52	2.1046 RF power output:n77_30MHz_30kHz_633334;50;CP-OFDM 256QAM^Inner_1RB_Right:PC2	18.9	21.65
n77	633334	-52	2.1046 RF power output:n77_30MHz_30kHz_633334;51;CP-OFDM 256QAM^Inner_Full:PC2	19.53	22.28
n77	633334	-52	2.1046 RF power output:n77_30MHz_30kHz_633334;52;CP-OFDM 256QAM^Edge_1RB_Left:PC2	18.99	21.74
n77	633334	-52	2.1046 RF power output:n77_30MHz_30kHz_633334;53;CP-OFDM 256QAM^Edge_1RB_Right:PC2	18.64	21.39
n77	633334	-52	2.1046 RF power output:n77_30MHz_30kHz_633334;54;CP-OFDM 256QAM^Outer_Full:PC2	19.54	22.29
n77	635666	-52	2.1046 RF power output:n77_30MHz_30kHz_635666;1;DFT-s-OFDM PI/2 BPSK^Inner_1RB_Left:PC2	25.96	28.71
n77	635666	-52	2.1046 RF power output:n77_30MHz_30kHz_635666;2;DFT-s-OFDM PI/2 BPSK^Inner_1RB_Right:PC2	25.31	28.06
n77	635666	-52	2.1046 RF power output:n77_30MHz_30kHz_635666;3;DFT-s-OFDM PI/2 BPSK^Inner_Full:PC2	25.76	28.51
n77	635666	-52	2.1046 RF power output:n77_30MHz_30kHz_635666;4;DFT-s-OFDM PI/2 BPSK^Edge_1RB_Left:PC2	23.56	26.31
n77	635666	-52	2.1046 RF power output:n77_30MHz_30kHz_635666;5;DFT-s-OFDM PI/2 BPSK^Edge_1RB_Right:PC2	22.89	25.64
n77	635666	-52	2.1046 RF power output:n77_30MHz_30kHz_635666;6;DFT-s-OFDM PI/2 BPSK^Outer_Full:PC2	25.53	28.28
n77	635666	-52	2.1046 RF power output:n77_30MHz_30kHz_635666;7;DFT-s-OFDM QPSK^Inner_1RB_Left:PC2	25.99	28.74
n77	635666	-52	2.1046 RF power output:n77_30MHz_30kHz_635666;8;DFT-s-OFDM QPSK^Inner_1RB_Right:PC2	25.32	28.07
n77	635666	-52	2.1046 RF power output:n77_30MHz_30kHz_635666;9;DFT-s-OFDM QPSK^Inner_Full:PC2	25.73	28.48
n77	635666	-52	2.1046 RF power output:n77_30MHz_30kHz_635666;10;DFT-s-OFDM QPSK^Edge_1RB_Left:PC2	23.59	26.34
n77	635666	-52	2.1046 RF power output:n77_30MHz_30kHz_635666;11;DFT-s-OFDM QPSK^Edge_1RB_Right:PC2	22.92	25.67
n77	635666	-52	2.1046 RF power output:n77_30MHz_30kHz_635666;12;DFT-s-OFDM QPSK^Outer_Full:PC2	25.04	27.79
n77	635666	-52	2.1046 RF power output:n77_30MHz_30kHz_635666;13;DFT-s-OFDM 16QAM^Inner_1RB_Left:PC2	24.87	27.62
n77	635666	-52	2.1046 RF power output:n77_30MHz_30kHz_635666;14;DFT-s-OFDM 16QAM^Inner_1RB_Right:PC2	24.21	26.96
n77	635666	-52	2.1046 RF power output:n77_30MHz_30kHz_635666;15;DFT-s-OFDM 16QAM^Inner_Full:PC2	24.61	27.36
n77	635666	-52	2.1046 RF power output:n77_30MHz_30kHz_635666;16;DFT-s-OFDM 16QAM^Edge_1RB_Left:PC2	23.61	26.36
n77	635666	-52	2.1046 RF power output:n77_30MHz_30kHz_635666;17;DFT-s-OFDM 16QAM^Edge_1RB_Right:PC2	22.93	25.68
n77	635666	-52	2.1046 RF power output:n77_30MHz_30kHz_635666;18;DFT-s-OFDM 16QAM^Outer_Full:PC2	24.03	26.78
n77	635666	-52	2.1046 RF power output:n77_30MHz_30kHz_635666;19;DFT-s-OFDM 64QAM^Inner_1RB_Left:PC2	23.78	26.53
n77	635666	-52	2.1046 RF power output:n77_30MHz_30kHz_635666;20;DFT-s-OFDM 64QAM^Inner_1RB_Right:PC2	23.16	25.91
n77	635666	-52	2.1046 RF power output:n77_30MHz_30kHz_635666;21;DFT-s-OFDM 64QAM^Inner_Full:PC2	23.59	26.34
n77	635666	-52	2.1046 RF power output:n77_30MHz_30kHz_635666;22;DFT-s-OFDM 64QAM^Edge_1RB_Left:PC2	23.54	26.29
n77	635666	-52	2.1046 RF power output:n77_30MHz_30kHz_635666;23;DFT-s-OFDM 64QAM^Edge_1RB_Right:PC2	22.86	25.61
n77	635666	-52	2.1046 RF power output:n77_30MHz_30kHz_635666;24;DFT-s-OFDM 64QAM^Outer_Full:PC2	23.6	26.35
n77	635666	-52	2.1046 RF power output:n77_30MHz_30kHz_635666;25;DFT-s-OFDM 256QAM^Inner_1RB_Left:PC2	21.17	23.92
n77	635666	-52	2.1046 RF power output:n77_30MHz_30kHz_635666;26;DFT-s-OFDM 256QAM^Inner_1RB_Right:PC2	20.53	23.28
n77	635666	-52	2.1046 RF power output:n77_30MHz_30kHz_635666;27;DFT-s-OFDM 256QAM^Inner_Full:PC2	21.06	23.81
n77	635666	-52	2.1046 RF power output:n77_30MHz_30kHz_635666;28;DFT-s-OFDM 256QAM^Edge_1RB_Left:PC2	20.9	23.65
n77	635666	-52	2.1046 RF power output:n77_30MHz_30kHz_635666;29;DFT-s-OFDM 256QAM^Edge_1RB_Right:PC2	20.23	22.98
n77	635666	-52	2.1046 RF power output:n77_30MHz_30kHz_635666;30;DFT-s-OFDM 256QAM^Outer_Full:PC2	20.97	23.72
n77	635666	-52	2.1046 RF power output:n77_30MHz_30kHz_635666;31;CP-OFDM QPSK^Inner_1RB_Left:PC2	24.26	27.01
n77	635666	-52	2.1046 RF power output:n77_30MHz_30kHz_635666;32;CP-OFDM QPSK^Inner_1RB_Right:PC2	23.6	26.35
n77	635666	-52	2.1046 RF power output:n77_30MHz_30kHz_635666;33;CP-OFDM QPSK^Inner_Full:PC2	24	26.75
n77	635666	-52	2.1046 RF power output:n77_30MHz_30kHz_635666;34;CP-OFDM QPSK^Edge_1RB_Left:PC2	22.6	25.35
n77	635666	-52	2.1046 RF power output:n77_30MHz_30kHz_635666;35;CP-OFDM QPSK^Edge_1RB_Right:PC2	21.97	24.72
n77	635666	-52	2.1046 RF power output:n77_30MHz_30kHz_635666;36;CP-OFDM QPSK^Outer_Full:PC2	23.06	25.81

Band	Channel	Cell Power	Test Item	Measured Value	EIRP
n77	635666	-52	2.1046 RF power output:n77_30MHz_30kHz_635666;37;CP-OFDM 16QAM^Inner_1RB_Left:PC2	24	26.75
n77	635666	-52	2.1046 RF power output:n77_30MHz_30kHz_635666;38;CP-OFDM 16QAM^Inner_1RB_Right:PC2	23.34	26.09
n77	635666	-52	2.1046 RF power output:n77_30MHz_30kHz_635666;39;CP-OFDM 16QAM^Inner_Full:PC2	23.54	26.29
n77	635666	-52	2.1046 RF power output:n77_30MHz_30kHz_635666;40;CP-OFDM 16QAM^Edge_1RB_Left:PC2	23.73	26.48
n77	635666	-52	2.1046 RF power output:n77_30MHz_30kHz_635666;41;CP-OFDM 16QAM^Edge_1RB_Right:PC2	23.08	25.83
n77	635666	-52	2.1046 RF power output:n77_30MHz_30kHz_635666;42;CP-OFDM 16QAM^Outer_Full:PC2	23.04	25.79
n77	635666	-52	2.1046 RF power output:n77_30MHz_30kHz_635666;43;CP-OFDM 64QAM^Inner_1RB_Left:PC2	23.46	26.21
n77	635666	-52	2.1046 RF power output:n77_30MHz_30kHz_635666;44;CP-OFDM 64QAM^Inner_1RB_Right:PC2	22.81	25.56
n77	635666	-52	2.1046 RF power output:n77_30MHz_30kHz_635666;45;CP-OFDM 64QAM^Inner_Full:PC2	23.15	25.9
n77	635666	-52	2.1046 RF power output:n77_30MHz_30kHz_635666;46;CP-OFDM 64QAM^Edge_1RB_Left:PC2	23.19	25.94
n77	635666	-52	2.1046 RF power output:n77_30MHz_30kHz_635666;47;CP-OFDM 64QAM^Edge_1RB_Right:PC2	22.56	25.31
n77	635666	-52	2.1046 RF power output:n77_30MHz_30kHz_635666;48;CP-OFDM 64QAM^Outer_Full:PC2	22.58	25.33
n77	635666	-52	2.1046 RF power output:n77_30MHz_30kHz_635666;49;CP-OFDM 256QAM^Inner_1RB_Left:PC2	19.46	22.21
n77	635666	-52	2.1046 RF power output:n77_30MHz_30kHz_635666;50;CP-OFDM 256QAM^Inner_1RB_Right:PC2	18.77	21.52
n77	635666	-52	2.1046 RF power output:n77_30MHz_30kHz_635666;51;CP-OFDM 256QAM^Inner_Full:PC2	19.26	22.01
n77	635666	-52	2.1046 RF power output:n77_30MHz_30kHz_635666;52;CP-OFDM 256QAM^Edge_1RB_Left:PC2	19.17	21.92
n77	635666	-52	2.1046 RF power output:n77_30MHz_30kHz_635666;53;CP-OFDM 256QAM^Edge_1RB_Right:PC2	18.52	21.27
n77	635666	-52	2.1046 RF power output:n77_30MHz_30kHz_635666;54;CP-OFDM 256QAM^Outer_Full:PC2	19.17	21.92
n77	631334	-51	2.1046 RF power output:n77_40MHz_30kHz_631334;1;DFT-s-OFDM PI/2 BPSK^Inner_1RB_Left:PC2	25.41	28.16
n77	631334	-51	2.1046 RF power output:n77_40MHz_30kHz_631334;2;DFT-s-OFDM PI/2 BPSK^Inner_1RB_Right:PC2	25.53	28.28
n77	631334	-51	2.1046 RF power output:n77_40MHz_30kHz_631334;3;DFT-s-OFDM PI/2 BPSK^Inner_Full:PC2	26.19	28.94
n77	631334	-51	2.1046 RF power output:n77_40MHz_30kHz_631334;4;DFT-s-OFDM PI/2 BPSK^Edge_1RB_Left:PC2	22.97	25.72
n77	631334	-51	2.1046 RF power output:n77_40MHz_30kHz_631334;5;DFT-s-OFDM PI/2 BPSK^Edge_1RB_Right:PC2	23.14	25.89
n77	631334	-51	2.1046 RF power output:n77_40MHz_30kHz_631334;6;DFT-s-OFDM PI/2 BPSK^Outer_Full:PC2	25.91	28.66
n77	631334	-51	2.1046 RF power output:n77_40MHz_30kHz_631334;7;DFT-s-OFDM QPSK^Inner_1RB_Left:PC2	25.43	28.18
n77	631334	-51	2.1046 RF power output:n77_40MHz_30kHz_631334;8;DFT-s-OFDM QPSK^Inner_1RB_Right:PC2	25.53	28.28
n77	631334	-51	2.1046 RF power output:n77_40MHz_30kHz_631334;9;DFT-s-OFDM QPSK^Inner_Full:PC2	26.16	28.91
n77	631334	-51	2.1046 RF power output:n77_40MHz_30kHz_631334;10;DFT-s-OFDM QPSK^Edge_1RB_Left:PC2	23	25.75
n77	631334	-51	2.1046 RF power output:n77_40MHz_30kHz_631334;11;DFT-s-OFDM QPSK^Edge_1RB_Right:PC2	23.14	25.89
n77	631334	-51	2.1046 RF power output:n77_40MHz_30kHz_631334;12;DFT-s-OFDM QPSK^Outer_Full:PC2	25.16	27.91
n77	631334	-51	2.1046 RF power output:n77_40MHz_30kHz_631334;13;DFT-s-OFDM 16QAM^Inner_1RB_Left:PC2	24.18	26.93
n77	631334	-51	2.1046 RF power output:n77_40MHz_30kHz_631334;14;DFT-s-OFDM 16QAM^Inner_1RB_Right:PC2	24.29	27.04
n77	631334	-51	2.1046 RF power output:n77_40MHz_30kHz_631334;15;DFT-s-OFDM 16QAM^Inner_Full:PC2	24.91	27.66
n77	631334	-51	2.1046 RF power output:n77_40MHz_30kHz_631334;16;DFT-s-OFDM 16QAM^Edge_1RB_Left:PC2	22.99	25.74
n77	631334	-51	2.1046 RF power output:n77_40MHz_30kHz_631334;17;DFT-s-OFDM 16QAM^Edge_1RB_Right:PC2	23.13	25.88
n77	631334	-51	2.1046 RF power output:n77_40MHz_30kHz_631334;18;DFT-s-OFDM 16QAM^Outer_Full:PC2	24.24	26.99
n77	631334	-51	2.1046 RF power output:n77_40MHz_30kHz_631334;19;DFT-s-OFDM 64QAM^Inner_1RB_Left:PC2	23.27	26.02
n77	631334	-51	2.1046 RF power output:n77_40MHz_30kHz_631334;20;DFT-s-OFDM 64QAM^Inner_1RB_Right:PC2	23.42	26.17
n77	631334	-51	2.1046 RF power output:n77_40MHz_30kHz_631334;21;DFT-s-OFDM 64QAM^Inner_Full:PC2	24.01	26.76
n77	631334	-51	2.1046 RF power output:n77_40MHz_30kHz_631334;22;DFT-s-OFDM 64QAM^Edge_1RB_Left:PC2	23.01	25.76
n77	631334	-51	2.1046 RF power output:n77_40MHz_30kHz_631334;23;DFT-s-OFDM 64QAM^Edge_1RB_Right:PC2	23.17	25.92
n77	631334	-51	2.1046 RF power output:n77_40MHz_30kHz_631334;24;DFT-s-OFDM 64QAM^Outer_Full:PC2	23.73	26.48
n77	631334	-51	2.1046 RF power output:n77_40MHz_30kHz_631334;25;DFT-s-OFDM 256QAM^Inner_1RB_Left:PC2	20.51	23.26
n77	631334	-51	2.1046 RF power output:n77_40MHz_30kHz_631334;26;DFT-s-OFDM 256QAM^Inner_1RB_Right:PC2	20.65	23.4
n77	631334	-51	2.1046 RF power output:n77_40MHz_30kHz_631334;27;DFT-s-OFDM 256QAM^Inner_Full:PC2	21.48	24.23
n77	631334	-51	2.1046 RF power output:n77_40MHz_30kHz_631334;28;DFT-s-OFDM 256QAM^Edge_1RB_Left:PC2	20.24	22.99
n77	631334	-51	2.1046 RF power output:n77_40MHz_30kHz_631334;29;DFT-s-OFDM 256QAM^Edge_1RB_Right:PC2	20.4	23.15
n77	631334	-51	2.1046 RF power output:n77_40MHz_30kHz_631334;30;DFT-s-OFDM 256QAM^Outer_Full:PC2	21.1	23.85
n77	631334	-51	2.1046 RF power output:n77_40MHz_30kHz_631334;31;CP-OFDM QPSK^Inner_1RB_Left:PC2	23.6	26.35
n77	631334	-51	2.1046 RF power output:n77_40MHz_30kHz_631334;32;CP-OFDM QPSK^Inner_1RB_Right:PC2	23.73	26.48
n77	631334	-51	2.1046 RF power output:n77_40MHz_30kHz_631334;33;CP-OFDM QPSK^Inner_Full:PC2	24.39	27.14
n77	631334	-51	2.1046 RF power output:n77_40MHz_30kHz_631334;34;CP-OFDM QPSK^Edge_1RB_Left:PC2	21.82	24.57
n77	631334	-51	2.1046 RF power output:n77_40MHz_30kHz_631334;35;CP-OFDM QPSK^Edge_1RB_Right:PC2	21.96	24.71
n77	631334	-51	2.1046 RF power output:n77_40MHz_30kHz_631334;36;CP-OFDM QPSK^Outer_Full:PC2	23.09	25.84
n77	631334	-51	2.1046 RF power output:n77_40MHz_30kHz_631334;37;CP-OFDM 16QAM^Inner_1RB_Left:PC2	23.56	26.31
n77	631334	-51	2.1046 RF power output:n77_40MHz_30kHz_631334;38;CP-OFDM 16QAM^Inner_1RB_Right:PC2	23.68	26.43
n77	631334	-51	2.1046 RF power output:n77_40MHz_30kHz_631334;39;CP-OFDM 16QAM^Inner_Full:PC2	24	26.75
n77	631334	-51	2.1046 RF power output:n77_40MHz_30kHz_631334;40;CP-OFDM 16QAM^Edge_1RB_Left:PC2	23.28	26.03
n77	631334	-51	2.1046 RF power output:n77_40MHz_30kHz_631334;41;CP-OFDM 16QAM^Edge_1RB_Right:PC2	23.41	26.16
n77	631334	-51	2.1046 RF power output:n77_40MHz_30kHz_631334;42;CP-OFDM 16QAM^Outer_Full:PC2	23.07	25.82
n77	631334	-51	2.1046 RF power output:n77_40MHz_30kHz_631334;43;CP-OFDM 64QAM^Inner_1RB_Left:PC2	22.95	25.7
n77	631334	-51	2.1046 RF power output:n77_40MHz_30kHz_631334;44;CP-OFDM 64QAM^Inner_1RB_Right:PC2	23.08	25.83
n77	631334	-51	2.1046 RF power output:n77_40MHz_30kHz_631334;45;CP-OFDM 64QAM^Inner_Full:PC2	23.48	26.23
n77	631334	-51	2.1046 RF power output:n77_40MHz_30kHz_631334;46;CP-OFDM 64QAM^Edge_1RB_Left:PC2	22.67	25.42
n77	631334	-51	2.1046 RF power output:n77_40MHz_30kHz_631334;47;CP-OFDM 64QAM^Edge_1RB_Right:PC2	22.8	25.55
n77	631334	-51	2.1046 RF power output:n77_40MHz_30kHz_631334;48;CP-OFDM 64QAM^Outer_Full:PC2	22.58	25.33
n77	631334	-51	2.1046 RF power output:n77_40MHz_30kHz_631334;49;CP-OFDM 256QAM^Inner_1RB_Left:PC2	18.52	21.27
n77	631334	-51	2.1046 RF power output:n77_40MHz_30kHz_631334;50;CP-OFDM 256QAM^Inner_1RB_Right:PC2	18.65	21.4
n77	631334	-51	2.1046 RF power output:n77_40MHz_30kHz_631334;51;CP-OFDM 256QAM^Inner_Full:PC2	19.33	22.08
n77	631334	-51	2.1046 RF power output:n77_40MHz_30kHz_631334;52;CP-OFDM 256QAM^Edge_1RB_Left:PC2	18.23	20.98
n77	631334	-51	2.1046 RF power output:n77_40MHz_30kHz_631334;53;CP-OFDM 256QAM^Edge_1RB_Right:PC2	18.39	21.14
n77	631334	-51	2.1046 RF power output:n77_40MHz_30kHz_631334;54;CP-OFDM 256QAM^Outer_Full:PC2	19.52	22.27
n77	633334	-51	2.1046 RF power output:n77_40MHz_30kHz_633334;1;DFT-s-OFDM PI/2 BPSK^Inner_1RB_Left:PC2	25.46	28.21
n77	633334	-51	2.1046 RF power output:n77_40MHz_30kHz_633334;2;DFT-s-OFDM PI/2 BPSK^Inner_1RB_Right:PC2	25.3	28.05
n77	633334	-51	2.1046 RF power output:n77_40MHz_30kHz_633334;3;DFT-s-OFDM PI/2 BPSK^Inner_Full:PC2	26.19	28.94
n77	633334	-51	2.1046 RF power output:n77_40MHz_30kHz_633334;4;DFT-s-OFDM PI/2 BPSK^Edge_1RB_Left:PC2	23.04	25.79
n77	633334	-51	2.1046 RF power output:n77_40MHz_30kHz_633334;5;DFT-s-OFDM PI/2 BPSK^Edge_1RB_Right:PC2	22.92	25.67
n77	633334	-51	2.1046 RF power output:n77_40MHz_30kHz_633334;6;DFT-s-OFDM PI/2 BPSK^Outer_Full:PC2	25.9	28.65
n77	633334	-51	2.1046 RF power output:n77_40MHz_30kHz_633334;7;DFT-s-OFDM QPSK^Inner_1RB_Left:PC2	25.48	28.23
n77	633334	-51	2.1046 RF power output:n77_40MHz_30kHz_633334;8;DFT-s-OFDM QPSK^Inner_1RB_Right:PC2	25.31	28.06
n77	633334	-51	2.1046 RF power output:n77_40MHz_30kHz_633334;9;DFT-s-OFDM QPSK^Inner_Full:PC2	26.16	28.91
n77	633334	-51	2.1046 RF power output:n77_40MHz_30kHz_633334;10;DFT-s-OFDM QPSK^Edge_1RB_Left:PC2	23.07	25.82
n77	633334	-51	2.1046 RF power output:n77_40MHz_30kHz_633334;11;DFT-s-OFDM QPSK^Edge_1RB_Right:PC2	22.94	25.69
n77	633334	-51	2.1046 RF power output:n77_40MHz_30kHz_633334;12;DFT-s-OFDM QPSK^Outer_Full:PC2	25.21	27.96
n77	633334	-51	2.1046 RF power output:n77_40MHz_30kHz_633334;13;DFT-s-OFDM 16QAM^Inner_1RB_Left:PC2	24.37	27.12
n77	633334	-51	2.1046 RF power output:n77_40MHz_30kHz_633334;14;DFT-s-OFDM 16QAM^Inner_1RB_Right:PC2	24.2	26.95
n77	633334	-51	2.1046 RF power output:n77_40MHz_30kHz_633334;15;DFT-s-OFDM 16QAM^Inner_Full:PC2	25	27.75
n77	633334	-51	2.1046 RF power output:n77_40MHz_30kHz_633334;16;DFT-s-OFDM 16QAM^Edge_1RB_Left:PC2	23.09	25.84