Trademarks

Autel®, MaxiCharger®, MaxiSys®, MaxiDAS®, MaxiScan®, MaxiCheck®, and MaxiRecorder® are trademarks of Autel Intelligent Technology Corp., Ltd., registered in China, the United States and other countries. All other marks are trademarks or registered trademarks of their respective holders.

Copyright Information

No part of this manual may be reproduced, stored in a retrieval system or transmitted, in any form or by any means, electronic, mechanical, photocopying, recording, or otherwise without the prior written permission of Autel.

Disclaimer of Warranties and Limitation of Liabilities

All information, specifications and illustrations in this manual are based on the latest information available at the time of printing.

Autel reserves the right to make changes at any time without notice. While information of this manual has been carefully checked for accuracy, no guarantee is given for the completeness and correctness of the contents, including but not limited to the product specifications, functions, and illustrations.

Autel will not be liable for any direct, special, incidental, indirect damages or any economic consequential damages (including the loss of profits).

IMPORTANT

Before operating or maintaining this unit, please read this manual carefully, paying extra attention to the safety warnings and precautions.

For Services and Support (24/7):

Web: www.autelenergy.com

Tel: (844) 765-0150

Email: Autelenergy@autel.com

For technical assistance in all other markets, please contact your local selling agent.

Safety Information

For your own safety and the safety of others, and to prevent damage to the device and vehicles upon which it is used, it is important that the safety instructions presented throughout this manual be read and understood by all persons operating or coming into contact with the device.

Safety Messages

Safety messages are provided to help prevent personal injury and equipment damage. All safety messages are introduced by a single word indicating the hazard level.

⚠ DANGER

Indicates an imminently hazardous situation which, if not avoided, will result in death or serious injury to the operator or to bystanders.

⚠ WARNING

Indicates a potentially hazardous situation which, if not avoided, could result in death or serious injury to the operator or to bystanders.

Safety Instructions

The safety messages herein cover situations Autel is aware of. Autel cannot know, evaluate or advise you as to all of the possible hazards. You must be certain that any condition or service procedure encountered does not jeopardize your personal safety.

⚠ SAFETY WARNINGS

- Read and follow all warnings and instructions before installing and operating the charger.
- This equipment should only be installed by a licensed electrician in accordance with all local codes and ordinances.
- This equipment must be grounded through a permanent wiring system or an equipment-grounding conductor.
- Do not install or use this equipment near flammable, explosive, harsh, or combustible materials, chemicals or vapors.
- Children should be supervised when around this equipment.
- Do not insert fingers or foreign objects into the electric vehicle connector.
- Do not use the equipment if the flexible power cord or EV cable is frayed, broken or otherwise damaged, or fails to operate.

- Do not use the equipment if the enclosure or the EV connector is frayed, broken or otherwise damaged, or fails to operate.
- Use 90 °C wire copper conductors only.
- Do not operate the equipment outside its operating temperature range of -40 to 131 °F (-40 to 55 °C).
- Incorrect installation and testing of the equipment could potentially damage the vehicle's battery, components, and/or the equipment itself.
- Handle the equipment with care during transportation. Do not subject it to strong force or impact or pull, twist, tangle, drag or step on the equipment, to prevent damage to it or any components.
- If the rules described in the manual contradict your local ordinances, refer to your local ordinances.

CONTENTS

SAFETY INFORMATION II
SAFETY MESSAGES II
SAFETY INSTRUCTIONS II

1 USING THIS MANUAL **1**

1.1 CONVENTIONS 1

2 GENERAL INTRODUCTION **3**

2.1 PRODUCT OVERVIEW 4
2.2 SPECIFICATIONS 7

3 INSTALLATION **9**

3.1 UNPACKING 9
3.2 PREPARING FOR INSTALLATION 10
3.3 INSTALLING THE CHARGER 10

4 OPERATION **22**

4.1 POWERING ON 22
4.2 ADDING YOUR CHARGER 22
4.3 START CHARGING 23
4.4 STOP CHARGING 23

5 TROUBLESHOOTING AND SERVICE **24**

5.1 TROUBLESHOOTING TABLE 24
5.2 SERVICE 26

6 COMPLIANCE **27**

1 Using This Manual

This manual describes the installation and use of the MaxiCharger AC Wallbox Commercial. Prior to installation, read through this manual to be familiarized with the instructions of this MaxiCharger to ensure a successful installation and smooth operations.

1.1 Conventions

The following conventions are used.

Bold Text

Bold text is used to highlight selectable items such as buttons and menu options.

Example:

- Tap **OK**.

Notes and Important Messages

Notes

A **NOTE** provides helpful information such as additional explanations, tips, and comments.

Example:

NOTE

The images and illustrations depicted in this manual may differ slightly from the actual ones.

Important

IMPORTANT indicates a situation which, if not avoided, may result in damage to the test equipment or vehicle.

Example:

IMPORTANT

The rear entry cables should be put through the cable inlet holes prior to mounting the charger to the wall dock.

Hyperlink

Hyperlinks or links that take you to other related articles, procedures, and illustrations are available in electronic documents.

Illustrations

Illustrations used in this manual are only examples; the actual product(s) or screens may vary.

2 General Introduction

The MaxiCharger AC Wallbox Commercial is designed to charge a plug-in hybrid electric vehicle or an electric vehicle (hereinafter called EV) for commercial use. Our chargers provide you with safe, reliable, fast, and smart charging solutions.

This manual will instruct you how to install and use this charger.

Intended Use

The MaxiCharger AC Wallbox Commercial is intended for the AC charging of EVs. It is intended for both indoor and outdoor use.

DANGER

1. If you use the equipment in any way other than described in this manual or other related documents, possible death, injury and damage to property can occur.
2. Use the equipment only as intended.

NOTE

The images and illustrations depicted in this manual may differ slightly from the actual ones.

2.1 Product Overview

Autel MaxiCharger AC Wallbox Commercial

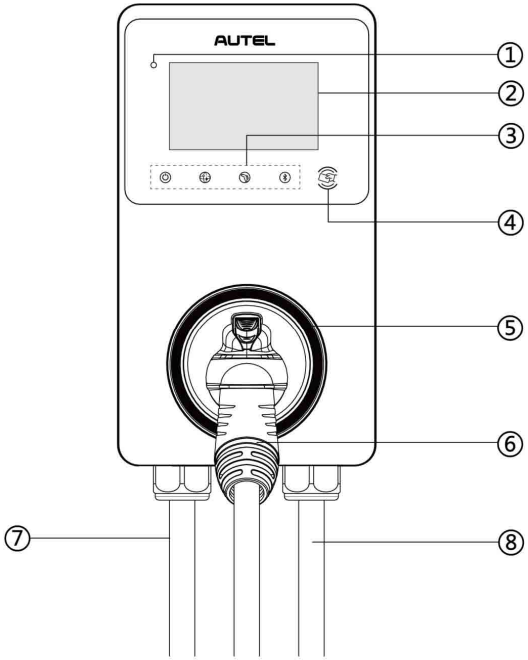

1. Ambient Light Sensor — detects ambient brightness
2. Display
3. LED Indicators (from left to right):
   - Power LED
   - Internet Connection LED
   - Charging LED
   - Bluetooth Connection LED
4. RFID Reader
5. Holster
6. Connector
7. AC Input Cable
8. EV Charging Cable
9. Bottom Ethernet Cable Port

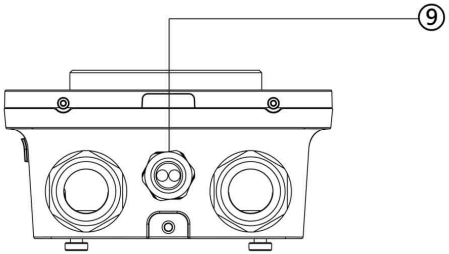

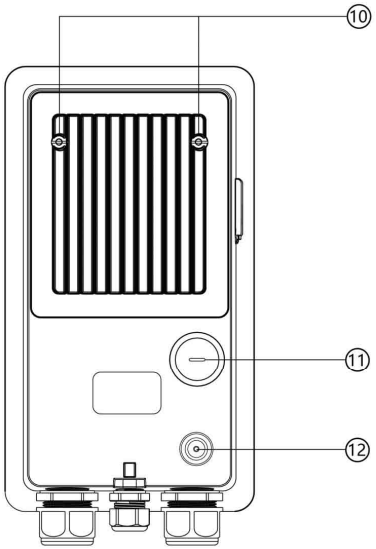

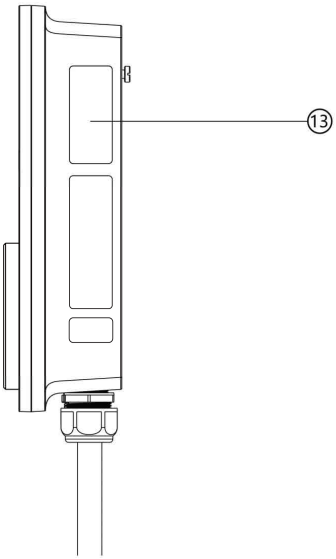

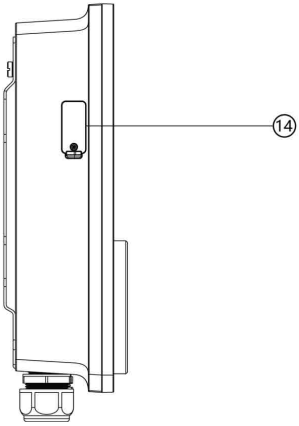

10. Mounting Screws
11. Rear AC Inlet Hole
12. Rear Ethernet Cable Port
13. Product Label
14. SIM Card Socket
15. RJ45 Port
16. RS485 Port — connects the RS485 cables
17. Current Selector — adjusts the current for the charger

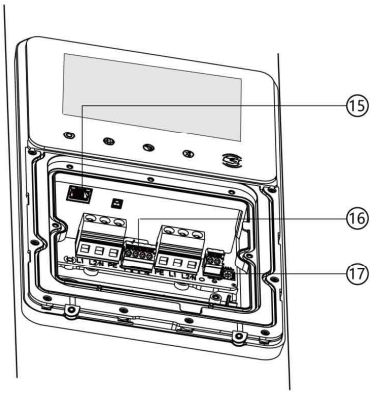

LED Description

LED	Description
Power LED	● **Solid Green:** The charger is on. ● **Not Illuminated:** The charger is off. ● **Flashing Yellow:** Data is being transmitted and/or firmware is upgrading. ● **Solid Yellow:** Firmware upgrade has failed. ● **Solid Blue:** Data transmission has failed; will illuminate green in five seconds.
Internet Connection LED	● **Solid Green:** The charger is connected to the Internet. ● **Not Illuminated:** The charger is not connected to the Internet.
Charging LED	● **Solid Blue:** An EV is connected. ● **Flashing Blue:** A schedule is active. ● **Flashing Green:** An EV is charging. ● **Solid Green:** A charge session has ended. ● **Not Illuminated:** The charger is not connected. ● **Solid Orange:** A recoverable error has occurred. ● **Solid Red:** An irrecoverable error has occurred. (Please contact support.)
Bluetooth Connection LED	● **Flashing Green:** The charger is connected to a mobile device via Bluetooth. ● **Flashing Blue:** The charger is connected to the accessory VCI (Vehicle Communication Interface) via Bluetooth. (VCI sold separately.) ● **Flashing Cyan:** The charger is connected to a mobile device and a VCI device simultaneously via Bluetooth. (VCI sold separately.) ● **Not Illuminated:** The charger is not connected via Bluetooth.

2.2 Specifications

Item	Description
AC Power Output Rating	● Maximum 7.6 kW (240 VAC @ 32 A model) ● Maximum 9.6 kW (240 VAC @ 40 A model) ● Maximum 12 kW (240 VAC @ 50 A model)
AC Power Input Rating	208/240 V AC, 60 Hz, single phase @ 16 A, 24 A, 32 A, 40 A, 48 A, 50 A
Circuit Breaker Options (A)	20 A, 30 A, 40 A, 50 A, 60 A, 70 A
Input Wiring Scheme	Three wires: L1, L2, and Earth (no neutral)
Input Cord	● NEMA 6-50 ● NEMA 14-50
Connector Type	SAE J1772
Charging Cable Length	24.6 ft. (7.5 m)
Display	● 5-inch, 800 x 480 touchscreen ● 4 LEDs ● Ambient light sensor
Metering	CTEP certified, ± 1 %
Ground Fault Detection	20 mA CCID with auto retry
Protection	Overcurrent, overvoltage, undervoltage, integrated surge protection
Connectivity	● 4G ● Bluetooth ● Wi-Fi ● Ethernet ● RS485
Card Reader	ISO 15693, ISO 14443, NFC

Item	Description
Sub-G (Auto Open the Tesla Charging Port)	Optional
Communication Protocols	● OCPP 1.6J ● OCPP 2.0 (Optional, will be available soon)
Mounting	Wall-mounted or floor using a pedestal
Enclosure Ratings	NEMA 4, indoor or outdoor installation
Operating Temperature	-40 to 131 °F (-40 to 55 °C)
Storage Temperature	-40 to 158 °F (-40 to 70 °C)
Dimension (H x W x D)	13” x 7” x 3” (335 x 187 x 85 mm)
Weight	14.8 lbs. (6.7 kg)
Safety and Compliance	NEC Article 625 and UL 916, UL 2594, UL2231-1, UL2231-2, UL 1998, CSA C22.2. No.280
Codes and Standards	FCC Part 15 Class B, Energy Star, OpenADR2.0 B
Warranty	3 years
Model	Maxi US AC W12-L-4G

3 Installation

3.1 Unpacking

Make sure that all parts are delivered according to the order. Check the packaging for the following parts.

Charging Station		Wall Dock	
Screw (M6 x 50) 2 PCS		Screw (M5 x 12)	
Wall Anchor (5/16”) 2 PCS		Bottom Entry Power Conduit Plug (M32)	
Installation Guide	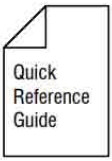	Packing List	
Amperage Labels			

Tool Kit

Screwdriver (Type T10)		Screwdriver (Type T25)	

NOTE

The list above does not necessarily include all the tools required for installation. **We recommend you read through the installation procedure and gather all the tools needed prior to installation**.

3.2 Preparing for Installation

3.2.1 Location

- Install your charger on a flat and vertical surface capable of supporting its weight (e.g., a finished wall or pedestal). The maximum weight of a MaxiCharger AC Wallbox Commercial is approximately 14.8 lbs. (6.7 kg).
- Install the charger in a location that allows the charging cable to remain within its bending tolerance.
- Position the charger in a location where it is not vulnerable to being damaged.
- Ensure the electrical panel supports a 240 V dedicated circuit with a new, dedicated, and non-GFCI two-pole circuit breaker, in accordance with local codes and ordinances.
- The recommended installation height is between 51 and 67 inches (1300 and 1700 mm).

3.3 Installing the Charger

The MaxiCharger AC Wallbox Commercial supports both rear entry and bottom entry wiring. Choose the most appropriate wiring entry for your charger based on the placement of the wiring.

DANGER

Risk of shock. Switch off all electrical power prior to installation. Do not switch it on until all the installation work is completed.

IMPORTANT

- Both the rear entry and bottom entry locations are on the left side of the charger. Ensure that you mount your charger in a location where the power supply wiring can be easily accessed on the left side.
- The rear entry cables should be put through the cable inlet holes prior to mounting the charger to the wall dock.

Placement

1. Find the wall stud nearest to and on the right side of the power supply wiring using a wall stud finder.
2. Draw a vertical line of approximately 20" (50 cm) in line with the wall stud at the approximate height of your mounting.

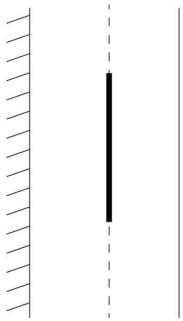

3. Place the wall dock with the center holes aligned with the vertical line. Mark the two lower mounting holes (A) and remove the wall dock.

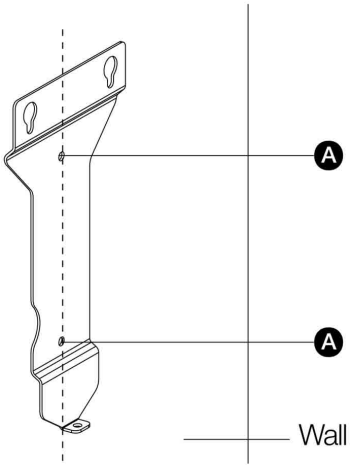

4. For rear entry wiring, mark the cable exit where the AC input cable will come out from the wall. Ensure that the cable exit matches the wall dock notch per the diagram below.

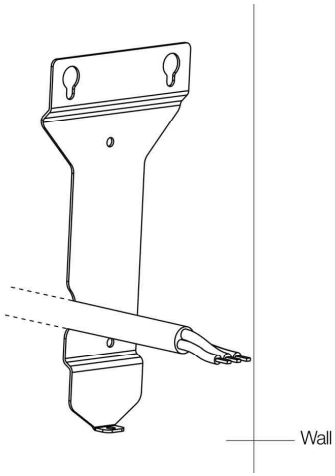

Mounting the Wall Dock

1. Drill two 5/16" holes and insert two 5/16" diameter wall anchors into the lower mounting holes.
2. Attach the wall dock to the mounting location by screwing two M6 x 50 screws (B) into the lower mounting holes. Tighten the screws using the screwdriver type PH2 (not included in the package).

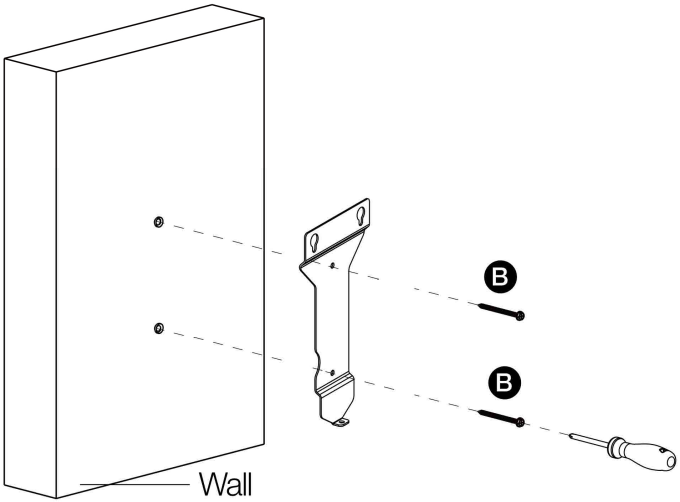

Preparing for Installation

Remove the covers from the charger by removing the screws using the screwdriver type T10.

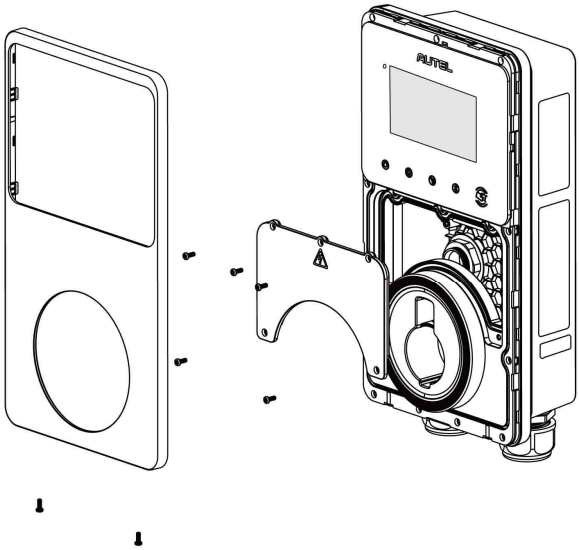

Power Supply Wiring

IMPORTANT

- Use copper conductors with the maximum wire size of 6 AWG (16 mm²).
- Ensure that the screws for the terminal blocks are properly tightened.
- Ensure that there is no copper wire or debris left inside of the charger before switching on the electrical power to the charger.

Step 1

Rear Entry

1. Remove the rear entry power conduit plug from the charger and replace it with the 3/4” conduit fitting (C).
2. Insert the AC input cable into the conduit fitting and attach the conduit fitting to the charger.
3. Screw the nut (D) into the conduit fitting.

NOTE

The conduit fitting is not included in the package.

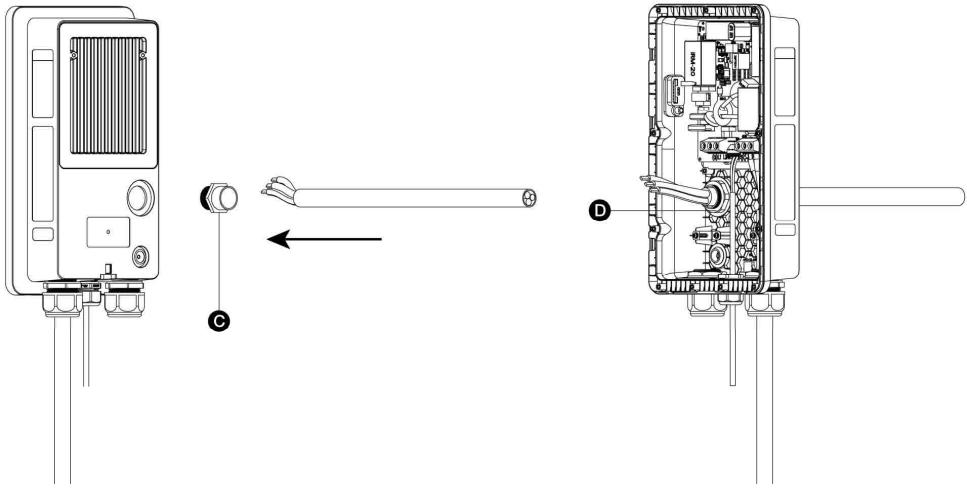

4. Remove the lower-left cable gland and install the bottom entry power conduit plug (E) to the charger.

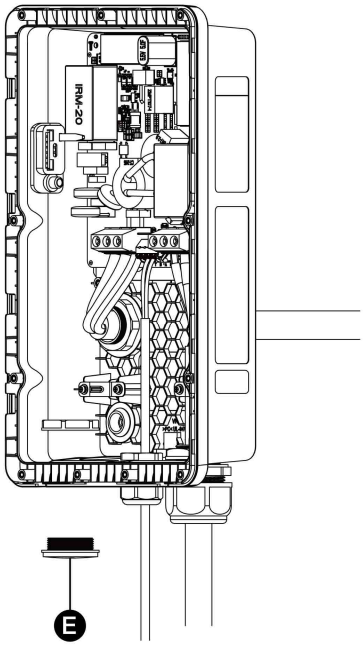

Bottom Entry

Insert the AC input cable into the inlet hole (F).

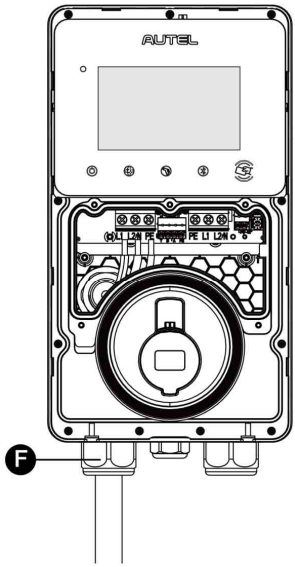

Step 2

1. Strip the wires to 1/2" (12 mm).
2. Connect the wires (L1, L2, and Ground) per the diagram and tighten each connector screw to 2 N·m (17.7 in·lbs).
3. Reinstall the covers and tighten the screws.

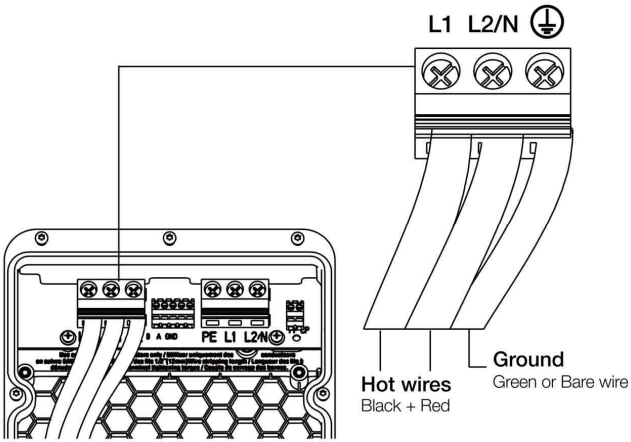

Mounting the Charger

1. Attach the charger to the wall dock by inserting the mounting screws (G) on the back of the charger into the two upper mounting holes (H). Slide the charger downwards.

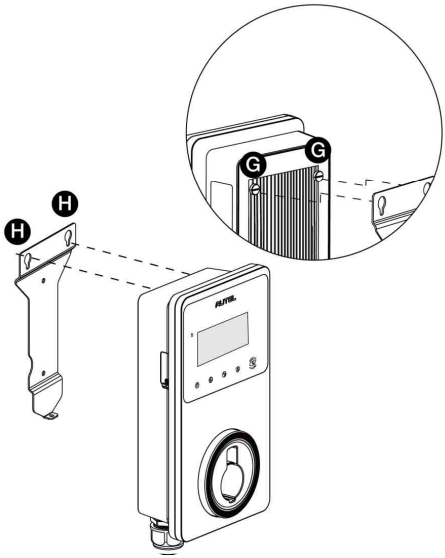

2. Screw the M5 x 12 screw (I) into the hole at the bottom of the charger and tighten the screw to secure the charger using the screwdriver type T25.

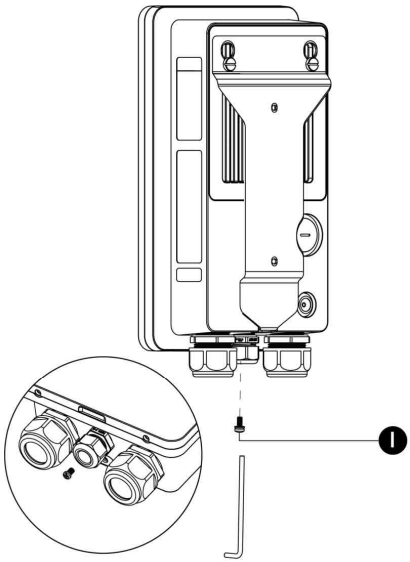

Connecting to the Internet

The charger can be connected to the Internet by Ethernet cable, Wi-Fi or a SIM card (Verizon, T-Mobile, and ATT are all supported).

Via the Ethernet cable:

Step 1

Rear Entry

1. Pierce the rubber grommet and put the Ethernet cable (J) through it.
2. Make a RJ45 plug and connect it with the Ethernet cable.

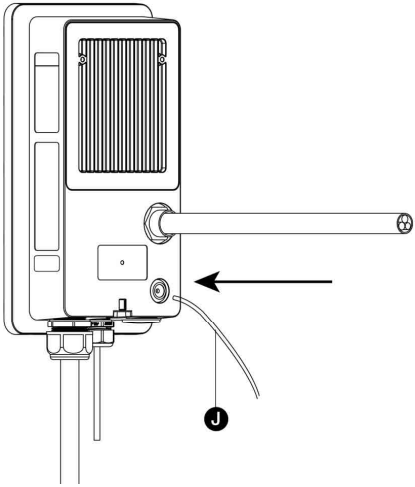

Bottom Entry

Put the Ethernet cable with the RJ45 plug through the bottom Ethernet cable port (K).

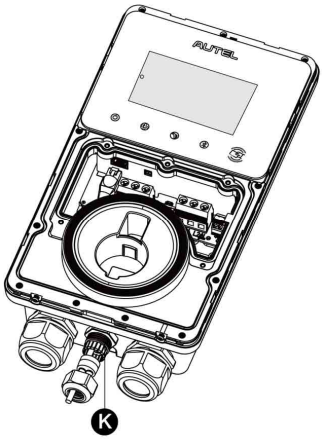

Step 2

Plug the cable into the RJ45 port as shown.

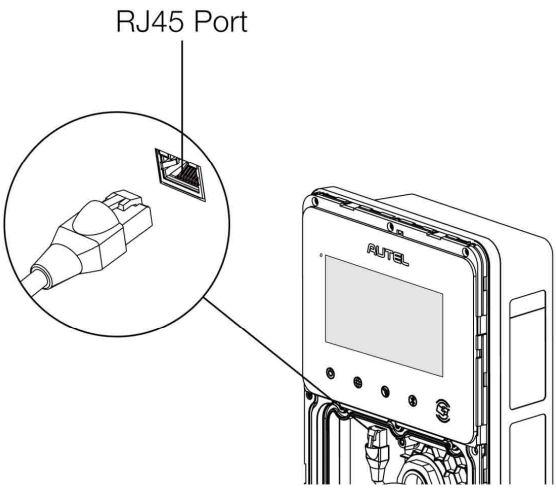

Via the SIM card:

Remove the SIM card cover by first unscrewing the M3 x 10 screw using the screwdriver type T10. Then, eject the SIM card tray using the screwdriver and place the card into it. Make sure that the card is inserted correctly. Reinstall the SIM card cover by following the procedures above in reverse order.

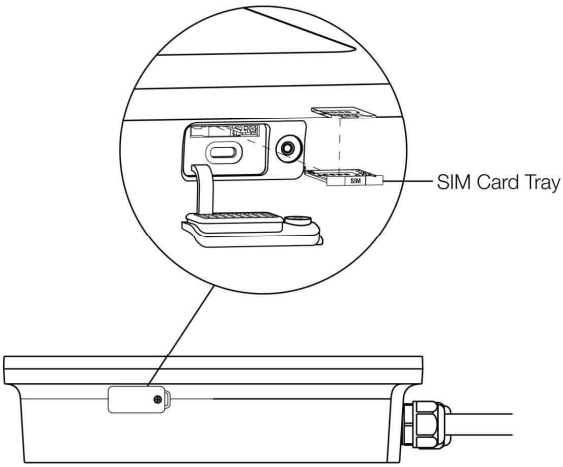

RS485 Cables Wiring (Optional)

If you need to connect the RS485A and RS485B cables, insert the cables through the bottom Ethernet cable port (G) first. Then connect the cables to the RS485 port as specified on the terminal block, respectively.

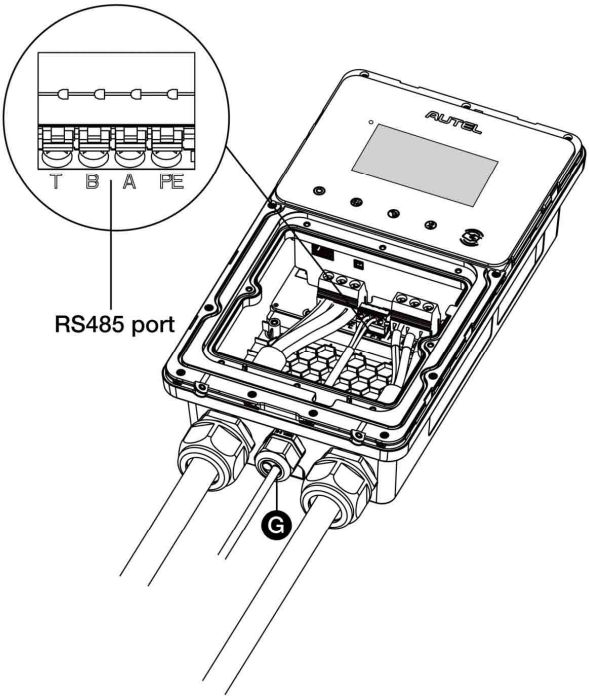

Adjusting the Rated Current

The MaxiCharger AC Wallbox Commercial allows you to manually set a lower maximum current using a current selector when installing your charger on a circuit rated lower than the maximum rating for your charger.

1. Remove the covers and locate the current selector.
2. Use a flathead screwdriver to set the rotary switch to the appropriate position per the diagram below.

Position	Amperage (A)	Circuit Breaker Rating
0	Not in Use	N/A
1	16	20
2	24	30
3	32	40
4	40	50
5	48	60
6	50	70
7	Not in Use	N/A
8	Not in Use	N/A
9	Not in Use	N/A

NOTE

- When the rotary switch is at 0, 7, 8 or 9, the corresponding amperage will still be 16, 50, 50, and 50, respectively.
- The maximum current is limited by the power rating of a charger as follows:
  - For 7 kW model: 32 A
  - For 9.6 kW model: 40 A
  - For 12 kW model: 50 A

3. When the current of your charger is set lower than the maximum rating, choose the correct current value from the Amperage Labels and affix it over the existing label on the charger.

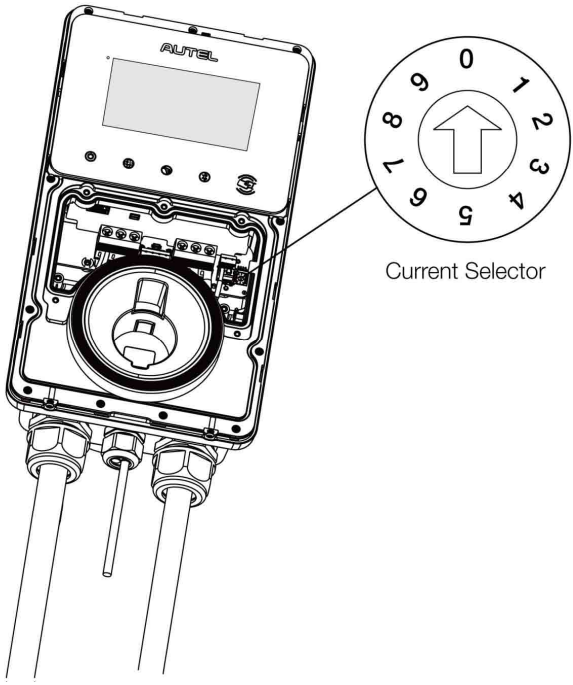

⚠**CAUTION**

To reduce the risk of fire, only connect your charger to a circuit with a branch circuit over-current protection of 125% of the selected maximum amperage setting of the device in accordance with ANSI/NFPA 70 (US) C22.2 NO 280 13 (Canada).

4 Operation

4.1 Powering on

Once all electrical connections have been safely made, switch on the power to the circuit from the circuit breaker and wait for the power supply to come on. There will be a series of self-check starts, making sure that the charger works correctly and safely. The power LED should illuminate green. If a recoverable error is detected, the charging LED illuminates orange; if the error cannot be recovered, it illuminates red.

Warning

Be careful when you work with electricity.

4.2 Adding Your Charger

➢ **To add your charger**

1. Scan the QR code below to download the Autel Charge app to your mobile device from the Google Play or App Store. For iOS users, you will be redirected to the App Store; for Android users, you will be redirected to the Google Play.
2. Open the Autel Charge app on your mobile device, and log in with your phone number or email. If you do not yet have an account, register with your phone number first.
3. Scan the QR code or enter the serial number and PIN code, which can be all found on the Installation Guide, to add the charger.

4.3 Start Charging

Caution

During the charge session, do not disconnect the connector. There is a risk of damage to the connector or your EV charging port.

1. Remove the connector from the holster.
2. Plug the connector into your EV charging port.
3. Choose one of the following ways to start a charge session:
   - If the Auto Start function is enabled in the Autel Charge app, the charger will automatically start charging once the connector is properly connected.
   - Use the Autel Charge app by tapping **Start** on the Charge screen.
   - If you have set a charging schedule in the Autel Charge app, the charger will initiate a charge session automatically as scheduled.
   - Tap your RFID card on the RFID reader.

NOTE

Ensure your EV is charging. The charging LED on the charger should be flashing green. If you suspect the vehicle is not charging properly, try reconnecting the charging cable or contact customer support.

4.4 Stop Charging

NOTE

- If you disconnect the EV charging cable during the charge session, the charger automatically disconnects the power supply. This stops all charging operations.
- When your vehicle is fully charged, the charger will automatically disconnect the power supply.

1. To stop charging, you can choose either of the following two ways:
   - Wait for the charge session to end and no further actions are required in the case of scheduled charging or Auto Start.
     - The charging LED will illuminate solid green.
     - The Autel Charge app displays that your EV is fully charged.
   - End the charge session by tapping **Stop** on the Charge screen or by tapping the RFID card on the RFID reader again.
2. Unplug the connector from your EV and return it to the holster.

5 Troubleshooting and Service

5.1 Troubleshooting Table

Item	Problems	Solutions
1	The charger is successfully added, but the Bluetooth connection fails.	Check whether the QR code on the charger is consistent with the QR code on the Installation Guide. If so, make sure the Bluetooth is enabled on your mobile device; if not, contact customer support.
2	The charge session does not start as scheduled.	Do not insert the connector into your EV charging port before setting up a charging schedule for the first time. Insert the EV charging cable after the schedule is set up.
3	Over-voltage	Use the multimeter to check whether the voltage on the power input is too high. If the result is greater than or equal to 120 % of the rated voltage (276 V), contact local power grid company.
4	Under-voltage	Use the multimeter to check whether the voltage on the power input is not sufficient. If the result is less than or equal to 70 % of the rated voltage (161 V), contact local power grid company.
5	Ground fault	Make sure the charger is grounded correctly.
6	Power failure	Make sure the switch to the circuit breaker is on.

Item	Problems	Solutions
7	Over-heating	● Check whether the EV charging cable is securely connected. ● Ensure the operating temperature is within the specified range on the product label. ● Stop charging. Restart charging until it is within the operation temperature range.
8	Residual current detected	Unplug the vehicle and plug in again. If the problem persists, contact customer support.
9	Bluetooth communication failure	● Make sure the Bluetooth is enabled on your mobile device and the charger is powered on and operating properly. ● Forget the charger in the Bluetooth settings on your mobile device and pair the charger to your device via Bluetooth again. ● If the problem persists, contact customer support.
10	Update failure via Bluetooth	● Make sure the charger is in idle status. ● Make sure the Bluetooth connection is working properly. ● If the problem persists, contact customer support.
11	Internet connection fails	● Try to connect another device to the same Internet, verifying the Internet connection is working properly. ● If the problem persists, contact customer support.

5.2 Service

If you cannot find solutions to your problems with the aid from the table above, please contact our technical support.

AUTEL

- **Website:** www.autelenergy.com
- **Phone:** (844) 765-0150
- **Email:** Autelenergy@autel.com
- **Address***:* 36 Harbor Park Drive, Port Washington, New York, USA 11050

6 Compliance

FCC regulatory conformance：

This device complies with Part 15 of the FCC Rules. Operation is subject to the following two conditions:

(1) This device may not cause harmful interference.

(2) This device must accept any interference received, including interference that may cause undesired operation.

NOTE: This equipment has been tested and found to comply with the limits for a Class B digital device, pursuant to part 15 of the FCC Rules. These limits are designed to provide reasonable protection against harmful interference in a residential installation.

This equipment generates uses and can radiate radio frequency energy and, if not installed and used in accordance with the instructions, may cause harmful interference to radio communications. However, there is no guarantee that interference will not occur in a particular installation. If this equipment does cause harmful interference to radio or television reception, which can be determined by turning the equipment off and on, the user is encouraged to try to correct the interference by one or more of the following measures:

- Reorient or relocate the receiving antenna.
- Increase the separation between the equipment and receiver.
- Connect the equipment into an outlet on a circuit different from that to which the receiver is connected.
- Consult the dealer or an experienced radio/TV technician for help

NOTE: The manufacturer is not responsible for any radio or TV interference caused by unauthorized modifications to this equipment. Such modifications could void the user's authority to operate the equipment.

RF Exposure

This equipment complies with FCC radiation exposure limits set forth for an uncontrolled environment. This equipment should be installed and operated with minimum distance of 20 cm between the radiator and your body. This transmitter must not be co-located or operating in conjunction with any other antenna or transmitter.

IC regulatory conformance:

This device complies with CAN ICES-3 (B)/NMB-3(B).

This device contains licence-exempt transmitter(s)/receiver(s) that comply with Innovation, Science and Economic Development Canada's licence-exempt RSS(s). Operation is subject to the following two conditions:

(1) This device may not cause interference.

(2) This device must accept any interference, including interference that may cause undesired operation of the device.

Cet appareil est conforme à la norme CAN ICES-3 (B)/NMB-3 (B).

Cet appareil contient des émetteurs / récepteurs exempt (s) de licence qui sont conformes aux RSS exemptes de licence d'Innovation, Sciences et Développement économique Canada. Son fonctionnement est soumis aux deux conditions suivantes:

(1) Cet appareil ne doit pas provoquer d'interférences.

(2) Cet appareil doit accepter toute interférence, y compris les interférences susceptibles de provoquer un fonctionnement indésirable de l'appareil.

RF Exposure

This equipment complies with IC radiation exposure limits set forth for an uncontrolled environment. This equipment should be installed and operated with minimum distance of 20 cm between the radiator and your body. This transmitter must not be co-located or operating in conjunction with any other antenna or transmitter.

Cet équipement est conforme aux limites d’ exposition aux rayonnements de la IC établies pour unenvironnement non contrôé. Cet équipement doit être installé et fonctionner à au moins 20cm de distance d’un radiateur ou de votre corps.