REXING®

Intelligent Hardwire Kit

User Manual

The information in this manual is subject to change without notice.

Rexing All Rights Reserved

www.rexingusa.com

Activate Your Extended

18-Month Warranty

Select Your Bonus Reward!

Activate within 30 days of purchase to claim your free gift and extend your limited 12-month warranty to 18 months.

Scan the QR Code to Activate and Pick Your Exclusive Bonus.

SCAN ME!

https://www.rexingusa.com/productreg/

Overview

Thank you for choosing REXING!

We hope you love your new products as much as we do. If you need assistance, or have any suggestions to improve it, please contact us.

care@rexingusa.com

(877) 740-8004

Our support team will respond you as soon as possible.

Always a surprise in Rexing.

Check us out here.

- https://www.facebook.com/rexingusa/
- https://www.instagram.com/rexingdashcam/
- https://www.rexingusa.com/support/registration/

Facebook

Instagram

Site

Product Support

What's in the Box?

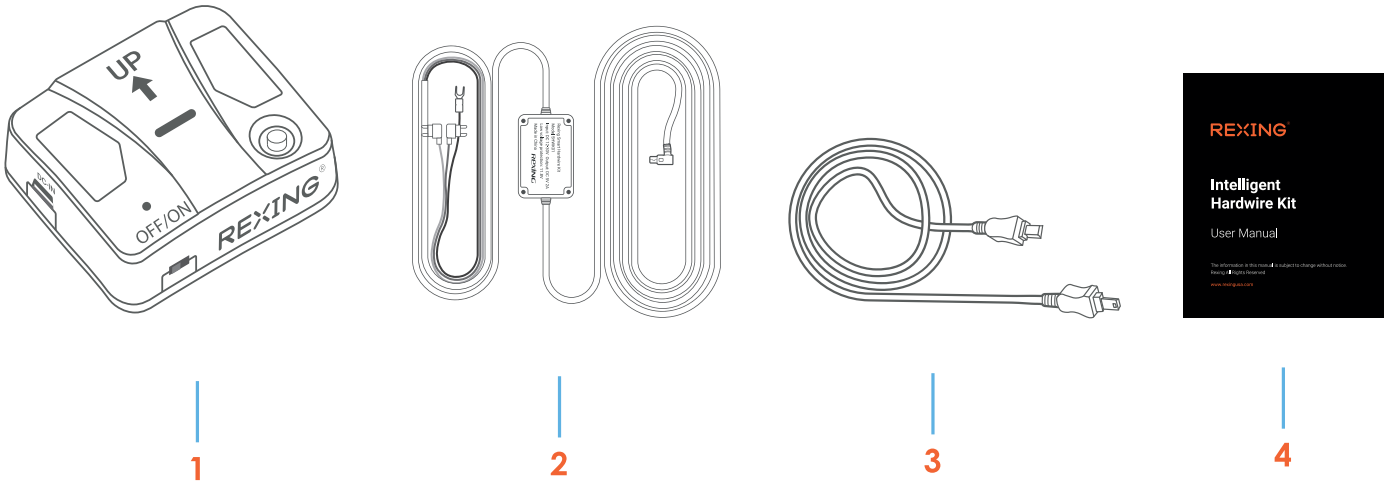

1. Motion Sensor
2. Smart Hardwire Kit
3. Mini-USB to Mini-USB Cable
4. User manual

⚠ Please DO NOT enable the parking monitor function in the settings of the dash cam once connected. This intelligent hardwire kit will override the dash cam's parking monitor feature.

Overview

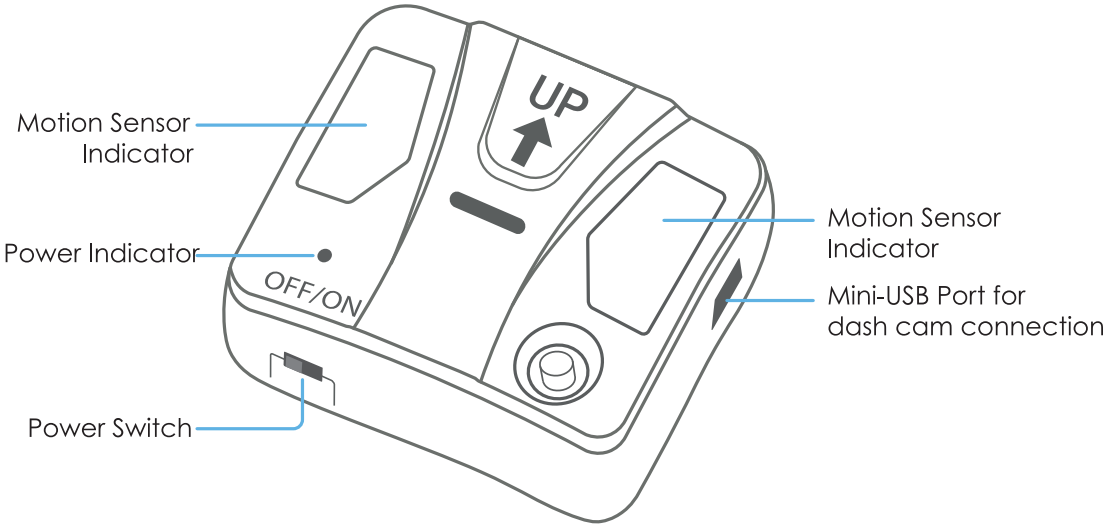
Motion Sensor Indicator
Power Indicator
Power Switch
UP
OFF/ON
Motion Sensor Indicator
Mini-USB Port for dash cam connection

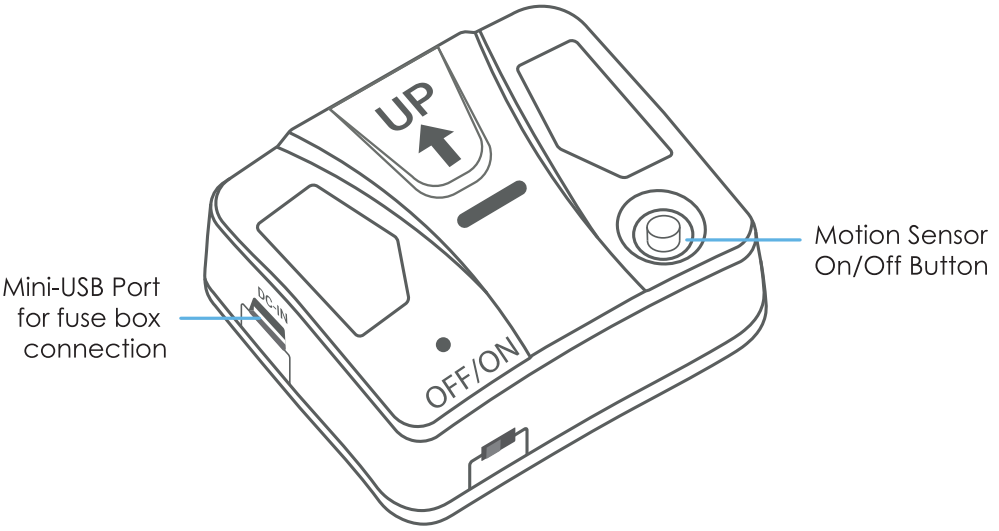
Mini-USB Port for fuse box connection
DC-IN
UP
OFF/ON
Motion Sensor On/Off Button

Specification

Input	12V-30V
Output	5V
Radio Frequency	5.8GHz

We kindly suggest taking a moment to watch our tutorial video. It's designed to help you have a smooth and successful installation experience. We believe you'll find it very helpful!

Please go to **https://www.rexingusa.com/ihwkinstall**
or scan QR code

Step One

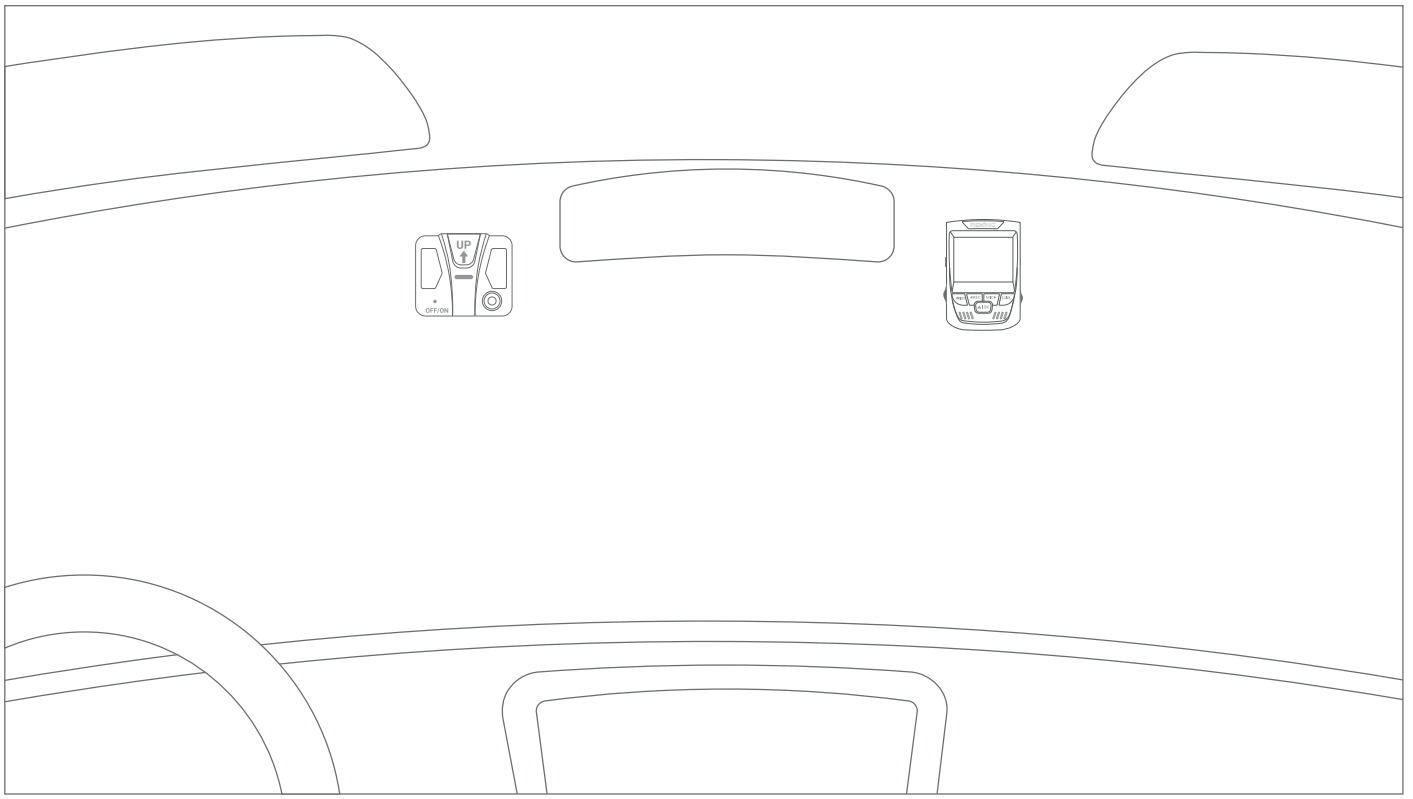

Once the dash cam is attached on the windshield with the included adhesive mount

Option 1: To detect motion inside the cabin, please position the motion sensor box at the top of the windshield, a few inches away from the dash cam.

> ⚠ Please make sure that the motion sensor is not blocked by any object, especially the rear view mirror.

Option 2: To detect motion in front of the car, please position the motion sensor box on the backside of the rearview mirror

Step Two

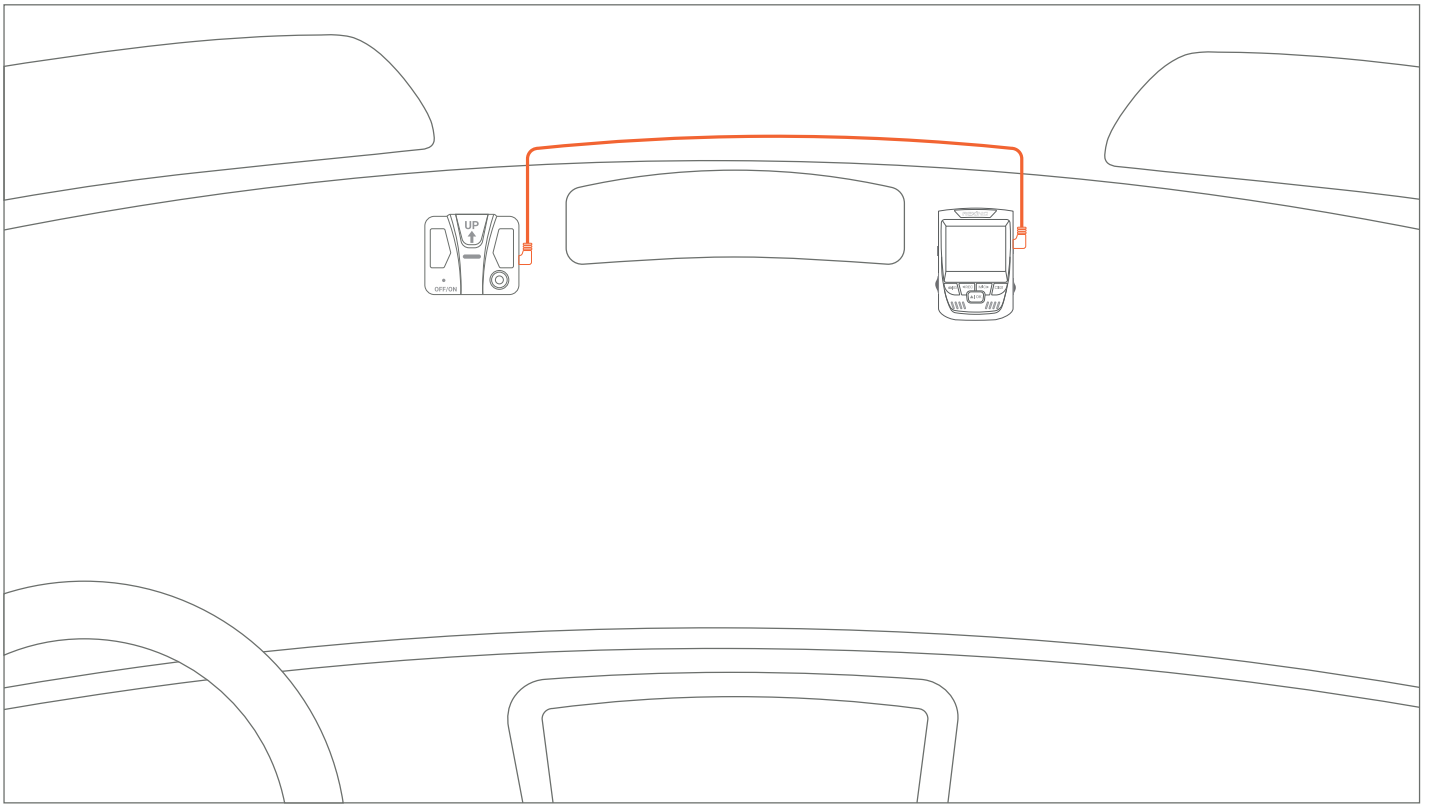

Connect the motion sensor with the included USB cable.

Step Three

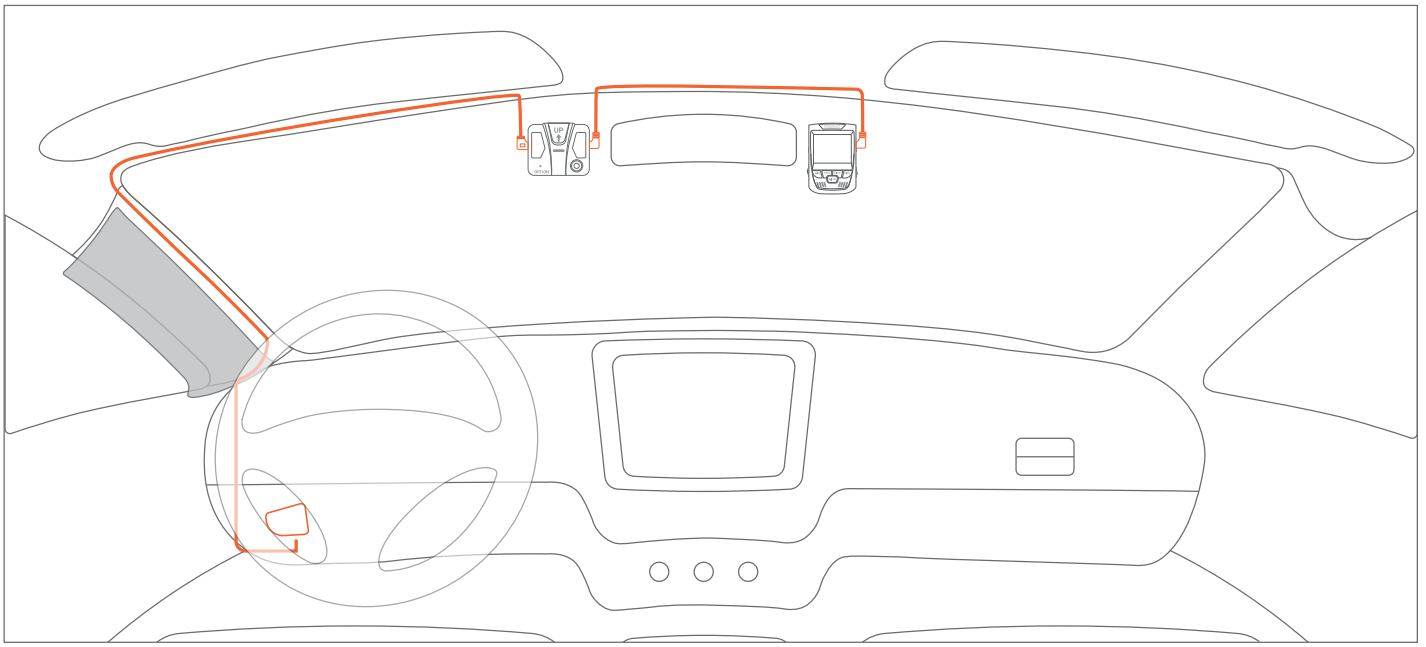

Run the wiring towards the fuse box with the included smart hardwire kit.

Smart Hardwire Kit Connection

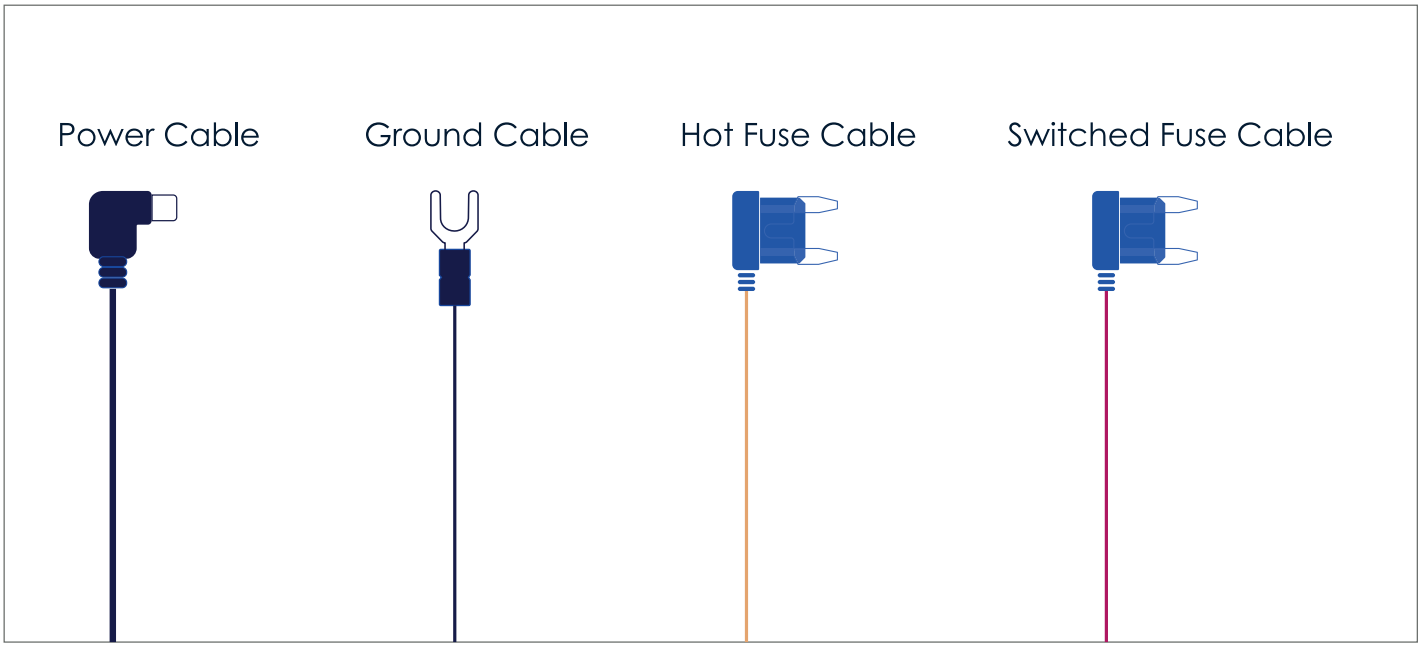

⚠ If you have different fuse type, please visit our support page at https://www.rexingusa.com/fuse for details.

Step One

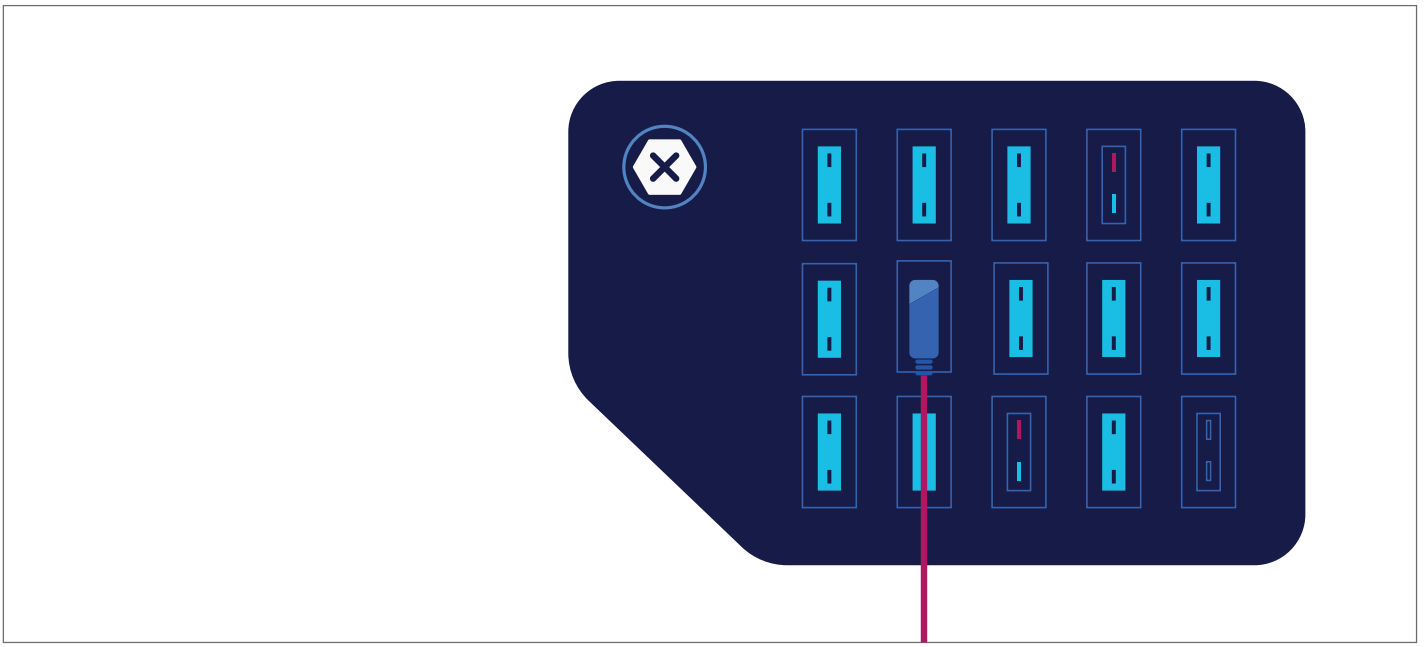

Find the switched fuse and connect the RED cable to it. This fuse has power only when the car is on.

Step Two

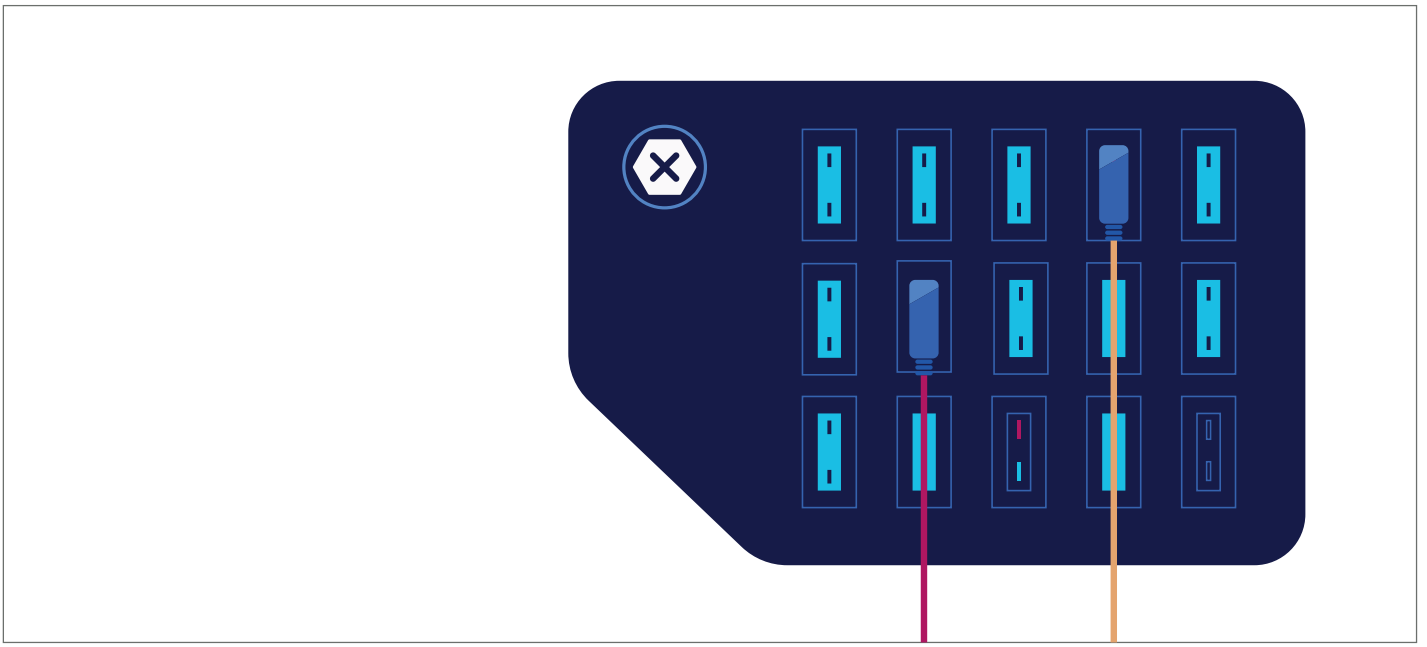

Find the hot fuse the connect the YELLOW cable to that. This fuse has power at all time.

Step Three

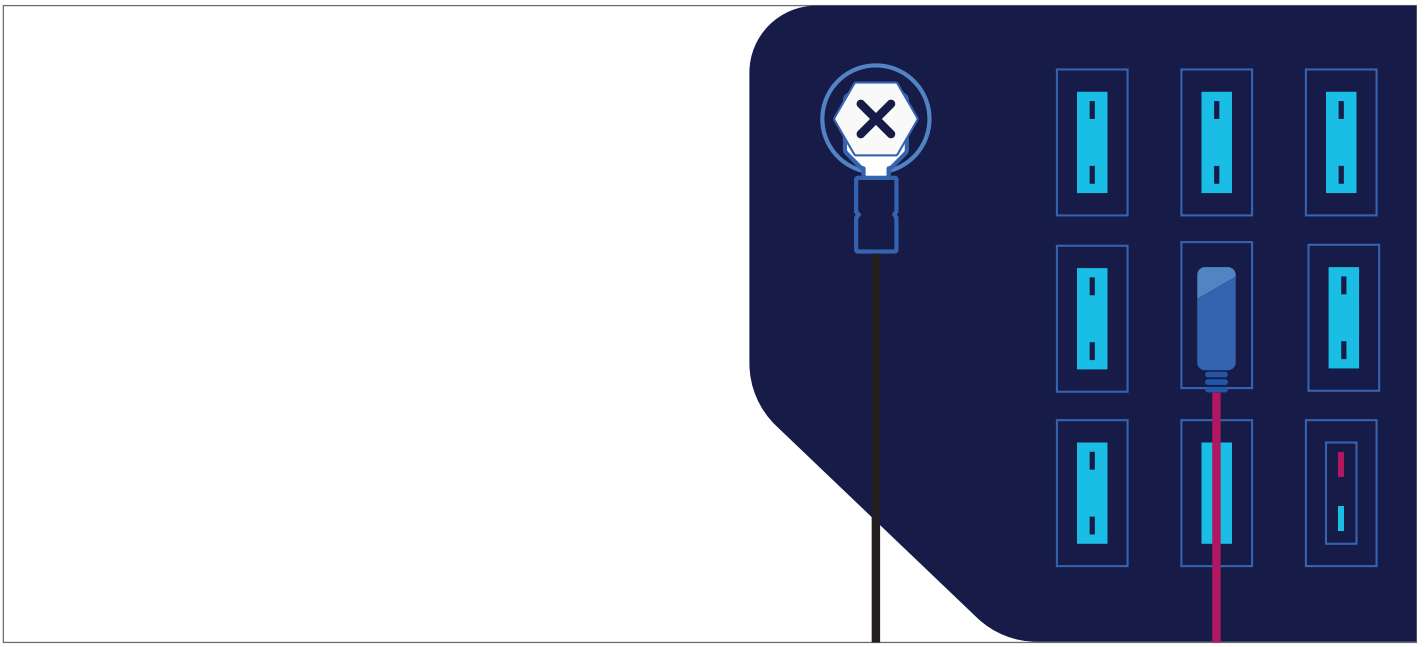

Attach the black fuse cable. Make sure to attached the GROUND cable to the bolt near the fuse box.

Step Four

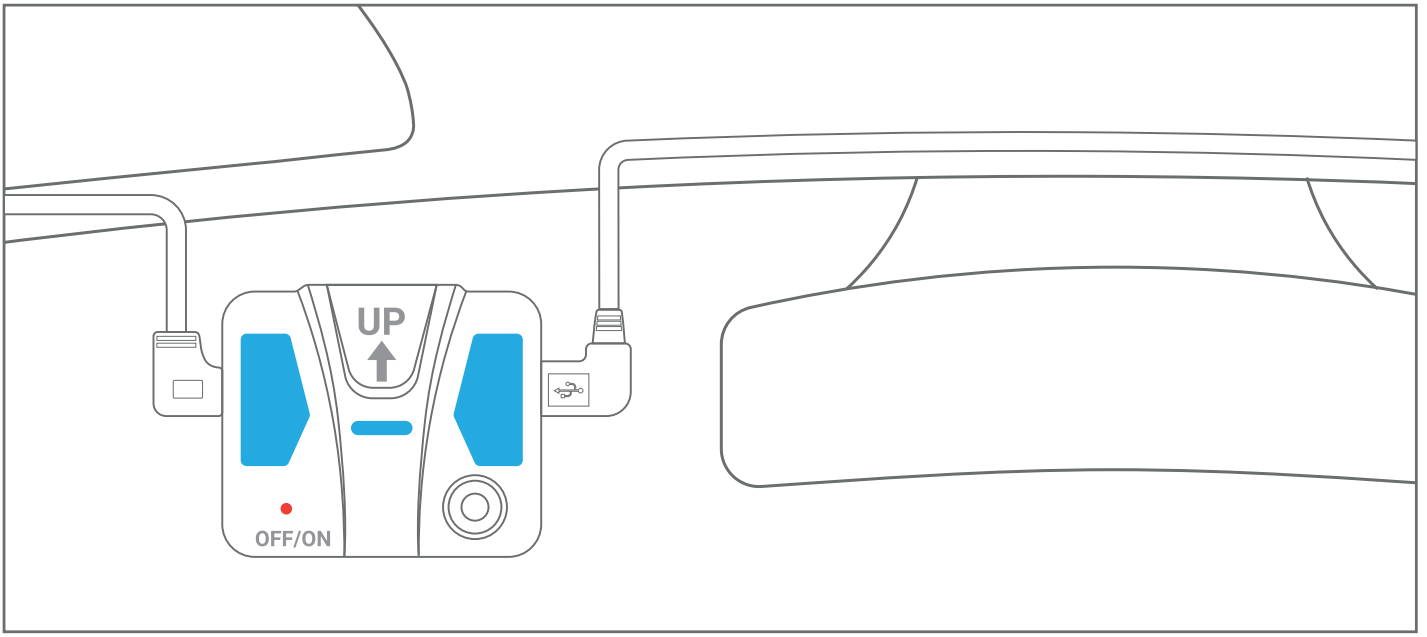

Finally, connect the power cable to the dash cam.

To active this feature, please DO NOT enable the parking monitor function in the settings of the dash cam, otherwise it may cause a malfunction.

The motion sensing will automatically on once the vehicle is powered off.

Once the blue indicator is on, which means that the sensor has detected motions. The intelligent hardwire kit will power up the dash cam automatically and start recording until the motion is cleared.

Warranty & Support

Warranty

The Rexing Intelligent Hardwire Kit comes with a full 12-months warranty. If you register your product on our official site (https://www.rexingusa.com/support/registration), you can extend the warranty to 18 months.

Support

If you have any questions regarding your product, please do not hesitate to contact us at care@rexingusa.com or call us at (877) 740-8004. Queries are typically answered within 12-24 hours.

Your opinion matters

Rexing is firmly committed to always improving our products, services, and user experience. If you have any thoughts on how we can do even better, we welcome your constructive feedback and suggestions.

Connect with us today at care@rexingusa.com

Thank you for choosing Rexing!

FCC ID: 2A5QB-K7

This device complies with part 15 of the FCC Rules. Operation is subject to the following two conditions: (1) This device may not cause harmful interference, and (2) this device must accept any interference received, including interference that may cause undesired operation.

Changes or modifications not expressly approved by the party responsible for compliance could void the user's authority to operate this equipment.

REXING®

MADE IN CHINA

FCC Warnning:

This equipment has been tested and found to comply with the limits for a Class B digital device, pursuant to part 15 of the FCC Rules. These limits are designed to provide reasonable protection againstharmful interference in a residential installation. This equipment generates, uses and can radiateradio frequency energy and, if not installed and used in accordance with the instructions, maycause harmful interference to radio communications. However, there is no guarantee thatinterference will not occur in a particular installation. If this equipment does cause harmfulinterference to radio or television reception, which can be determined by turning the equipmentoff and on, the user is encouraged to try to correct the interference by one or more of thefollowing measures:

- Reorient or relocate the receiving antenna.
- Increase the separation between the equipment and receiver.
- Connect the equipment into an outlet on a circuit different from that to which the receiver is connected.
- Consult the dealer or an experienced radio/TV technician for help.

Caution: Any changes or modifications to this device not explicitly approved by manufacturer could void your authority to operate this equipment.

This device complies with part 15 of the FCC Rules. Operation is subject to the following two conditions:

(1)This device may not cause harmful interference, and (2) this device must accept any interference received, including interference that may cause undesired operation.

This equipment complies with FCC radiation exposure limits set forth for an uncontrolled environment. This equipment should be installed and operated with minimum distance 0cm between the radiator and your body.