NEO iDSD 2

User Manual

Thank you for purchasing the iDSD from Neo series. The **NEO iDSD 2** is a balanced USB and Bluetooth Ultra-Res DAC + headphone amplifier

FEATURES:

- Versatile audio hub: DAC, preamp and headphone amp
- Ultra-Res digital audio – 32-bit/784kHz PCM, DSD512 and full MQA decoding
- Dual-core DAC design enables true-native DSD and PCM
- Advanced jitter reduction – GMT femto-precision clock and smart storage cache
- Four user-selectable digital filters – fine-tune sound to suit the source material
- State-of-the-art HD Bluetooth 5.4 – fully optimised performance, whatever your source device
- Every Bluetooth format supported: aptX Lossless, aptX Adaptive, LDAC, LHDC/HWA and more
- Enhanced PureWave fully balanced dual-mono circuit design delivers ultra-low distortion
- Exceptional power drives the toughest headphone loads (5x the power of the first-gen NEO iDSD)
- XSpace and XBass II – adjust soundstage and frequency response to match your headphones
- iPower 2 included – audiophile AC/DC power supply with Active Noise Cancelation
- Position horizontally or vertically – 2-inch colour display rotates to suit orientation

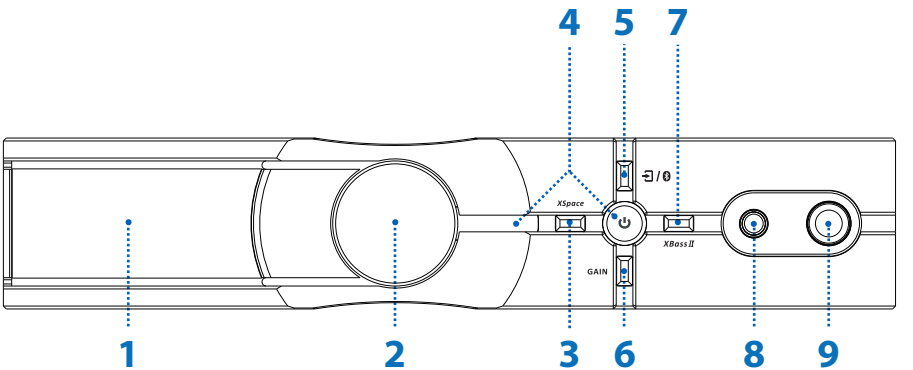

1.	**TFT display**	P.4	6.	**Gain selection**	P.9
2.	**Multi-function knob**	P.4-7	7.	**XBass II selection**	P.10
3.	**XSpace matrix On/Off**	P.7	8.	**Balanced 4.4mm headphone output**	P.10
4.	**Power On/Off and Brightness**	P.8	9.	**Unbalanced 6.3mm headphone output**	P.10
5.	**Input channel selector/Bluetooth pairing button**	P.8-9			

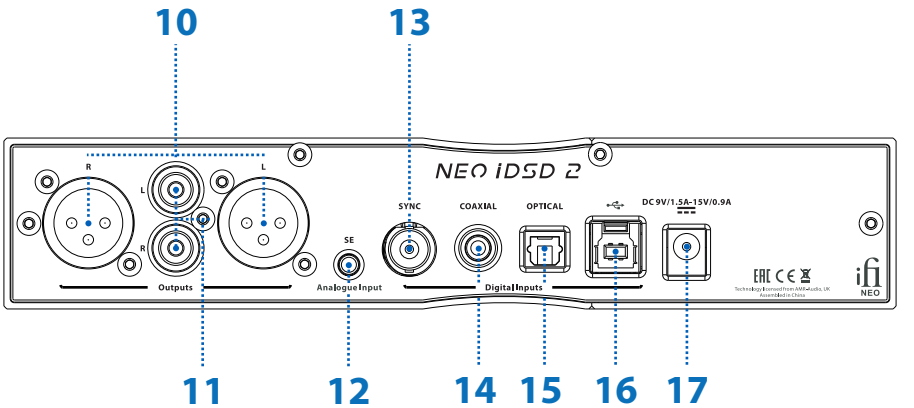

10. Balanced XLR analogue line output	P.11	**14. Coaxial digital input**	P.11
11. Unbalanced RCA analogue line output	P.11	**15. Optical digital input**	P.11
12. Unbalanced 3.5mm analogue line input	P.11	**16. USB audio input**	P.11
13. Clock sync input	P.11	**17. DC power supply connection**	P.12

1. TFT Display

The TFT display shows the current input channel, XBass, XSpace, format, sample rate, and power mode.

Tip: TFT screen should be on the left-hand side when NEO iDSD 2 is positioned horizontally, and at the top when positioned vertically.

2. Multi-function Knob

Controls:
- Analogue volume control (turn)
- Mute (short press)
- Menu settings (long press 3s)

Analogue volume control and Mute

Turn the dial to change the volume. The analogue volume control in the NEO iDSD 2 is superior to any digital volume control.

Mute

Press the rotary dial to mute. To unmute, press it again or turn the rotary dial.

Menu settings (long press 3s)

Controls:

- Digital Filters
- Volume sync
- BT Voice Prompt
- External Sync Clock
- Line volume ctrl
- HP Line out coexist
- Factory Reset

Note: *Rotate to select function, short press to confirm selection or toggle on/off mode. No operation within 10 seconds, the display will return to the home.*

I) Digital Filters

The following 4 digital filters are available:

'BP'	Bit-Perfect: no digital filtering, no pre or post ringing
'STD'	Standard, modest filtering, modest pre and post ringing
'MIN'	Minimum phase, slow roll-off, minimum pre and post ringing
'GTO'	Gibbs Transient-Optimised: up-sampled to 352.8/384kHz, minimum filtering, no pre ringing, minimum post ringing

Note: *If the GTO filter is selected, the display indicates the sample rate as 352.8kHz or 384kHz, illustrating the upsampling operation of this filter.*

II) Volume Sync
Turns the volume sync on/off. It is off by default.

III) BT voice prompt
Turns the bluetooth voice announcement on/off. It is off by default.

IV) External Sync Clock*
10MHz External Sync Clock input on/off. It is off by default.

If no 10MHz clock is detected or if there is an error in the external clock, the display will indicate an error and the NEO iDSD 2 will automatically switch back to the internal clock.

V) Line volume ctrl
Turns the line volume ctrl on/off. It is off by default.

This mode will determine whether or not the NEO iDSD 2 analogue line output section volume control is used.

VI)HP Line out coexist

Turns the headphone and line output coexist on/off. It is off by default.

This mode will decide whether to use the analogue line output of NEO iDSD 2 or not when a headphone is plugged in. By default, the line output is off when the headphone output is working, and when coexist is on, the headphone and line section can be output at the same time.

VII) Factory Reset

Select "Apply" to perform a factory reset. The iFi logo will appear on the screen and the device will reboot after a successful operation.

Warning: Factory reset will delete all stored Bluetooth pairings, digital filtering will default to BP, Bluetooth voice announcement on, default screen brightness high, default input channel USB, default volume 68dB, default gain 0dB, default XBass and XSpace off.

3. *XSpace* Matrix On/Off

The *XSpace* Matrix on/off recreates a holographic sound field.

It is a purely analogue signal processing circuit designed for listening to headphones as if one was listening to speakers. This addresses the 'music inside the head' sensation, which can make for uneasy

4. Power On/Off and Brightness

Power ON/OFF

Long press the power switch to power on/off.

Screen Brightness (Short press)

High High brightness mode. The display brightness always remains High.

Med Medium brightness mode. The display brightness always remains Medium.

Low Low brightness mode. The display brightness always remains low.

Off Sleep mode. If no operation is performed within 10 seconds, the display will turn off.

5. Input selector/Bluetooth pairing

This cycles between the following inputs:

USB Bluetooth Coaxial Optical Line (3.5mm) Auto

Note: Please select the input channel according to your audio source input mode. For example, when using USB input, you need to switch the input channel to "USB".

Note: When "Auto" mode is selected, the input signal is detected and the input channel is automatically switched.

The NEO iDSD 2 receives Bluetooth signals via aptX, aptX Lossless, aptX Adaptive, LDAC, LHDC/HWA, AAC and SBC.

Bluetooth pairing

When the Bluetooth input is selected, the Bluetooth icon in the display will flash and search for a previously paired device. If a stored device is not found, it will automatically enter pairing mode and flash.

Press and hold the button (1s) to enter pairing mode until the Bluetooth icon flashes. To pair, find the 'iFi Lossless Audio' Bluetooth device on your audio source device such as a mobile phone.

The NEO iDSD 2 can store up to 8 paired Bluetooth devices. To delete all previously stored devices, please perform a factory reset (item 2 - VII).

6. Gain selection

Short press cycles through these four gain modes:

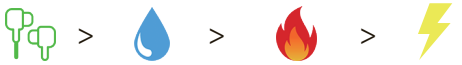

-12dB > 0dB > +8dB > +16dB

Note: Always start from 0dB and then increase the gain level to attain an enjoyable and comfortable level of volume from the headphones.

Warning: At the outset do not use excessive gain, otherwise damage to hearing or connected headphones may ensue. AMR/iFi audio is not responsible for any damage/injury from misuse.

7. *XBass II* selection

Cycle through the three bass modes to select:

Off	>	*XBass*	>	*XBass*	>	*XBass*
Off		XBass		Presence		XBass + Presence

XBass II is an analogue circuit designed to 'add back' the lost bass response for more accurate reproduction of the original music.

Note: Research into headphone frequency response showed that apurely flat response may not be correct. Our long present XBass fits the profile of the low-frequency correction required. However, it was also shown that a certain amount of upper midrange boost is needed to give many headphones a more 'natural' sound.
This upper midrange region is usually called the 'presence' region; we have used this term to indicate the upper midrange correction. In the NEO iDSD2, XBass II (or perhaps better HPEQ) can be selected to have either Bass + Presence correction,only Bass or only Presence correction.

*Note: Sonically-hindering DSP is NOT used for **XBass II** nor **XSpace** matrix systems. They use the highest-quality discrete components and operate purely in the analogue domain. Hence all the clarity and resolution of the original music is retained.*

8. Balanced 4.4mm headphone output

Connect balanced 4.4mm headphones.

9. Unbalanced 6.3mm headphone output

Connection for 6.3 single ended headphones . Please use 3.5 to 6.3 mm adaptor for 3.5 single ended headphones.

10. Balanced XLR analogue line output
Connection of 4.4mm to XLR or similarly balanced interconnects.

11. Unbalanced RCA analogue line Output
Single-ended unbalanced signal output to an amplifier.

12. Unbalanced 3.5mm analogue line input
Connect to an analogue line level audio source with stereo 3.5mm connector.

13. Clock sync input
Connect to an external clock source (10MHz) (Optional)

Tip:The menu setting External Sync Clock needs to be on in order to use this input. If no 10MHz clock is detected or if there is an error in the external clock, the screen will indicate an error and the NEO iDSD 2 will automatically switch back to the internal clock.

14. Coaxial Digital input
Connect an S/PDIF source such as Apple TV, Google Chromecast, PS5, a high-end CD transport, etc.

15. Optical Digital input
Connect an S/PDIF source such as Apple TV, Google Chromecast, PS5, Xbox, a high-end CD transport, etc.

16. USB audio input
This is a USB3.0 B input (USB2.0 compatible). For a superior connection to a computer, use the enclosed USB3.0 cable. It connects the NEO iDSD 2 to the computer audio source

17. DC Power Supply Connection

DC 9V/1.5A - 15V/0.9A* power input. Please connect NEO iDSD 2 to the enclosed power supply.

**A power supply unit must be able to deliver minimum rated repetitive current.*

Tip: *It is preferable to use a USB 3.0 over using a USB 2.0 port on the PC.*

Note: *For use with PC it is necessary to download drivers.*

Tip: *For all latest firmware updates please refer to our website here: www.ifi-audio.com/download-hub/*

MQA

NEO iDSD 2 includes MQA technology, which enables you to play back MQA audio files and streams, delivering the sound of the original master recording.

'MQA' or 'MQA.' indicates that the product is decoding and playing an MQA stream or file, and denotes provenance to ensure that the sound is identical to that of the source material. 'MQA.' indicates it is playing an MQA Studio file, which has either been approved in the studio by the artist/producer or has been verified by the copyright owner. 'OFS' confirms that the product is receiving an MQA stream or file. This delivers the final unfold of the MQA file and displays the original sample rate.

MQA and the Sound Wave Device are registered trade marks of MQA Limited © 2016

MQA

1) Listen to MQA (Master Quality Authenticated) files straight out of the box.
2) For MQA tracks, simply connect to Tidal and check the options to stream MQA.
3) Visit mqa.co.uk for more information.

“iFi Nexis”

Available on the App Store

GET IT ON Google Play

Download the Nexis app for added features and future updates

Set up your NEO iDSD 2 using our iFi Nexis App
Please search for "NEO iDSD 2" within the iFi Nexis app.

The iFi Nexis app helps you to use all the features and settings of the NEO iDSD 2, such as OTA upgrades*, remote control** and more.

**OTA (Over the Air Technology), or Over the Air download technology, automatically downloads firmware upgrade packages and upgrades automatically over the network.*

***Provides users with a convenient and easy-to-use way to control their device as an alternative to the traditional remote control, for adjusting all the functions and settings of the NEO iDSD 2 more easily, conveniently and freely.*

Scan the QR code to view the official iFi audio NEO iDSD 2 video on YouTube.

Cautions

1. Avoid extreme heat, cold and humidity.
2. Avoid dropping or crushing the NEO iDSD 2.
3. If you experience discomfort or pain, try lowering the volume or discontinuing use temporarily.
4. Always check the actual output volume on your earphone, headphone, or loudspeakers before playing audio, as many music player software and operating systems do not appropriately apply industrial standards governing volume control (e.g., USB Device Class Denition for Human Interface Devices). If in doubt, before playing any music, turn o CyberSync or any other volume synchronization feature on the iFi Product and bring the volume down to the lowest setting.

Prolonged Heat Exposure

Your iFi Product may become very warm during normal use. It is important to keep your iFi Product on a hard, stable, and well-ventilated work surface when in use or charging.

Warning: To prevent possible hearing damage, do not listen at high volume levels for long periods.

SPECIFICATIONS

Digital stage	
Hi-res support	DSD 512 / 22.6MHz PCM 768kHz full MQA Decoder
Bluetooth formats	aptX Lossless, aptX Adaptive, aptX, LDAC, LHDC/HWA, AAC, SBC
Line stage	
Line output – XLR	19.5V max. (variable); 4.4V (fixed)
Line output – RCA	10.5V max. (variable); 2.2V (fixed)
Output impedance	XLR ≤100Ω; RCA ≤50Ω
SNR	≥120dB(A) @ 0dBFS
DNR	≥120dB(A) @ -60dBFS
THD+N	<0.0015% @ 0dBFS

Outputs:	
Headphone output – 4.4mm	3.5V/19.5V max. (12Ω - 600Ω headphones)
Headphone output – 6.3mm	4.5V/9.5V max. (12Ω - 300Ω headphones)
Output power – 4.4mm	>19.5V/650mW (@ 600Ω); >13.3V/5551mW (@ 32Ω)
Output power – 6.3mm	>10.5V/184mW (@ 600Ω); >9.5V/2832mW (@ 32Ω)
Output impedance	≤1Ω
SNR	≥120dB(A) (3.3V 6.3mm/6.2V 4.4mm)
DNR	≥20dB(A)
THD+N	<0.0015% (125mW @ 32Ω)
General	
Power supply requirement	DC 9V/1.5A - 15V/0.9A (centre +ve)
Power consumption	No signal ~5W; Max signal ~13.5W
Dimensions	214x158x41mm (8.4"x6.2"x1.6")
Net weight	916g (2.0lbs)
Limited warranty	12 months*

**A power supply unit must be able to deliver minimum rated repetitive current*
***12 months typical or as permitted/required by local reseller laws.*
****Specifications are subject to change without notice*

FCC COMPLIANCE STATEMENT:
This device complies with part 15 of the FCC Rules.
Operation is subject to the following two conditions:
(1) This device may not cause harmful interference, and
(2) this device must accept any interference received,
including interference that may cause undesired operation.

Note: This equipment has been tested and found to comply with the limits for a Class B digital device, pursuant to Part 15 of the FCC Rules. These limits are designed to provide reasonable protection against harmful interference in a residential installation. This equipment generates, uses and can radiate radio frequency energy and, if not installed and used in accordance with the instructions, may cause harmful interference to radio communications.

However, there is no guarantee that interference will not occur in a particular installation. If this equipment does cause harmful interference to radio or television reception, which can be determined by turning the equipment off and on, the user is encouraged to try to correct the interference by one or more of the following measures:

Reorient or relocate the receiving antenna.
Increase the separation between the equipment and receiver.
Connect the equipment into an outlet on a circuit different from that to which the receiver is connected.
Consult the dealer or an experienced radio/TV technician for help.

Warning: Changes or modifications to this unit not expressly approved by the part responsible for compliance could void the user's authority to operate the equipment.

FCC Radiation Exposure Statement

This equipment complied with FCC radiation exposure limits set forth for an uncontrolled environment. This equipment should be installed and operated with minimum distance 20cm between the radiator & your body.

ifi