14+ AGES

HIGH SPEED VEHICLE

No.16103

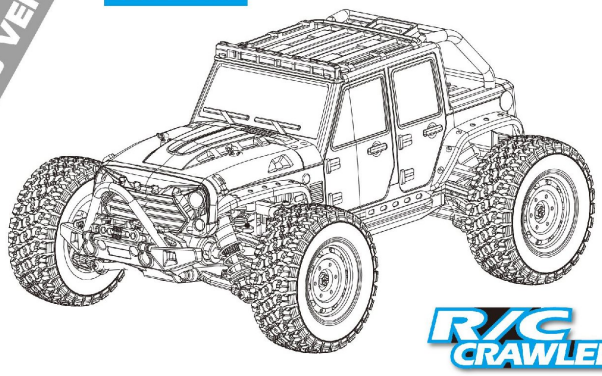

R/C CRAWLER

-在每次使用前，请确保已给模型车电池组充分充电。
-本产品不是玩具，而是全比例模型车。14岁以下儿童必须在成年人密切监督下方能操作。

- Please fully charge the battery pack before each use.
- This product is not a toy, but a full-scale model car. Children under aged 14 must not operate this product unless they are closely supervised by adults.

14+ AGES

HIGH SPEED VEHICLE

产品说明书(Instruction manual)

操作前请详阅此说明书 (Please read these instructions carefully before using it)

No.16101

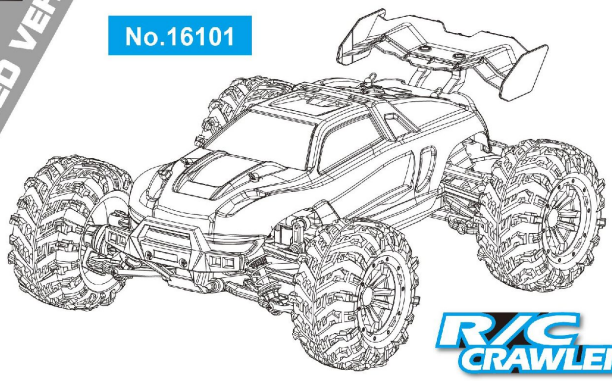

R/C CRAWLER

-在每次使用前，请确保已给模型车电池组充分充电。
-本产品不是玩具，而是全比例模型车。14岁以下儿童必须在成年人密切监督下方能操作。

- Please fully charge the battery pack before each use.
- This product is not a toy, but a full-scale model car. Children under aged 14 must not operate this product unless they are closely supervised by adults.

No.16106

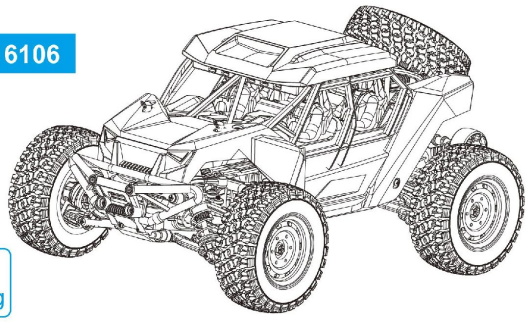

警告 Warning

1. 内含小零件，严禁14岁以下儿童使用。
2. 需在成人的陪同下详细阅读本说明书。
3. 实物与图形可能会略有不同，请以实物为准！

1. Not for children under 14 years due to small parts.
2. Detailed scale kit for adult collectors to assemble.
3. The real object may be slightly different from the graphics, please take the real object as the standard!

No.16102PRO

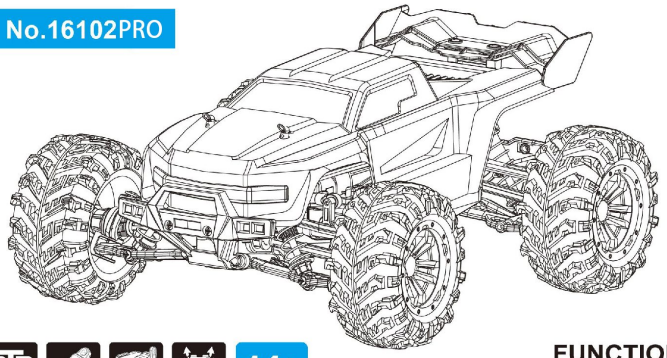

FUNCTION:
FORWARD, BACKWARD,
TURN LEFT OR RIGHT,LIGHT, DRIFT.

FCC Statement

WARNING: Any changes or modifications not expressly approved by the party responsible for compliance could void the user's authority to operate this equipment.

NOTE: This equipment has been tested and found to comply with the limits for a Class B digital device, pursuant to Part 15 of the FCC Rules. These limits are designed to provide reasonable protection against harmful interference in a residential installation. This equipment generates uses and can radiate radio frequency energy and, if not installed and used in accordance with the instructions, may cause harmful interference to radio communications. However, there is no guarantee that interference will not occur in a particular installation. If this equipment does cause harmful interference to radio or television reception, which can be determined by turning the equipment off and on, the user is encouraged to try to correct the interference by one of the following measures:

- Reorient or relocate the receiving antenna.
- Increase the separation between the equipment and receiver.
- Connect the equipment into an outlet on a circuit different from that to which the receiver is connected.
- Consult the dealer or an experienced radio/TV technician for help.

The device must not be co-located or operating in conjunction with any other antenna or transmitter.

⚠ 警告

本产品含有小零件请勿让三岁以下儿童玩耍； 本产品含电子元件，不得入水或在潮湿环境下使用；电池充电器应定期检查其电线、 插头、外壳和其他部件是否损坏，发现损坏时应停止使用。

注意事项

1. 可拆卸的小零件要放好，千万不可让小孩吞食。
2. 如操作场地有电波干扰，请另选场地操作。
3. 遥控器电源低电时，请立即停止操作。
4. 对拆除后的包装物，请不要随地丢弃，以免污染环境卫生。
5. 请将您的遥控模型存放在干燥,阴凉的地方。
6. 不要置于近火和高温、潮湿的地方储存。
7. 当电池被水浸湿，请将水分充分地擦拭干净，如有变形，请停止使用。

电池使用注意事项

1. 车体使用一组 Li-ion 7.4V 可充电电池组；
2. 遥控器使用3节1.5V“AA”号电池；
3. 安装或更换电池时请注意极性；
4. 充电电池只能在成人监护下充电；
5. 不可混用新旧或不同型号的电池；
6. 电池电量用尽后，应从模型车内取出；
7. 接线端不应短路；
8. 非充电电池不可充电；
9. 充电电池充电前应从模型车中取出；
10. 请不要将坏的电池、电池组分解或扔到火中、水里，以免发生意外；
11. 充电器的额定输入电压必须与当地的家用电压相符；
12. 在充电过程中，充电器和电池出现微温，属于正常现象。
13. 本模型车禁止使用非原厂电池。

⚠ Warning:

Choking hazard! This product contains small parts. NOT suitable for children under 3 years. Contains electrical components and should be kept dry at all times. Regularly check the battery charger wires, plugs and shell and other components for damage. DO NOT use if any part is damaged.

Caution proceeding

1. Detachable small parts should be stored safely and out of reach of children.
2. If interference is experienced, turn the model off and try it again in a different area
3. Remote control will not function correctly if the batteries are low. Please replace the batteries.
4. Please discard old/used batteries in a safe manner. Consider your environment!
5. Please store the remote control in cool, dry place.
6. DO NOT expose to fire or high temperatures, moist storage.
7. Should the battery get wet, wipe immediately with a soft dry cloth. If transformed, please stop usage.

Battery use caution proceeding

1. Bodywork uses a set of Li-ion 7.4V rechargeable batteries.
2. Remote control uses 3 x 1.5V AA batteries.
3. Please pay attention to correct polarity when replacing batteries.
4. Rechargeable batteries should be charged under adult supervision.
5. DO NOT use a mix of old and new or different types of battery.
6. After the battery is exhausted, the model car should be removed.
7. DO NOT short circuit any terminals.
8. DO NOT attempt to recharge non rechargeable batteries.
9. Remove batteries from the model car when recharging.
10. DO NOT put batteries into a fire or into water.
11. The rated input voltage battery charger MUST be suitable for your mains power voltage.
12. During charging it is quite normal for the charger and batteries to heat up.
13. It is forbidden to use non original batteries for this model car.

遥控器电池的装配 Assembly of the transmitter battery

1 如图所示，逆时针方向拧开螺丝，翻开电池盖。
As shown in the figure, unscrew the screws counterclockwise and open the battery cover.

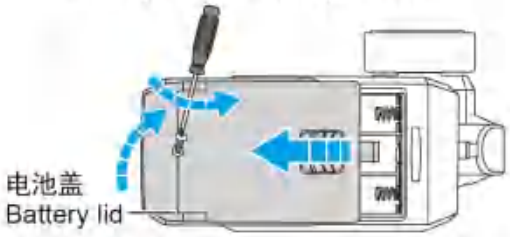

2 如图所示，装入3粒AA号碱性电池并注意电池正负极是否正确装入。
Load 3 AA-size alkaline batteries as shown in the illustration. Caution: install batteries with correct polarity.

遥控器需要使用3节1.5V "AA"电池(不包括)
3x"AA"Size Batteries for transmitter(Not Included)

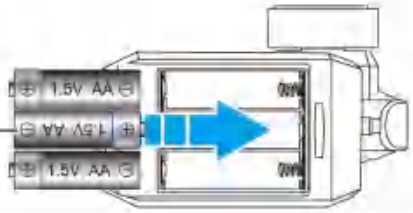

3 如图所示，合上电池盖，顺时针方向拧上螺丝。
As shown in the figure, close the battery cover and tighten the screw clockwise.

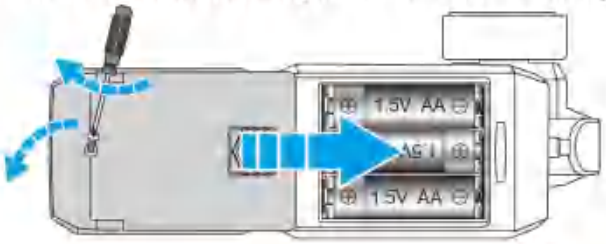

- 请勿混用新旧或不同类型的电池。
- 请及时更换耗尽的电池，请勿使用漏液电池。
- 定期检查遥控器上的电池电量。若电池电量不足，发射和接收效果将不理想。在此种情况下，车子可能会失控，这将会导致发生事故。
- Use the batteries of same brand
- Do not mix old and new batteries in use.
- Remove the batteries from the transmitter when not in use. Do not use leaky batteries.

遥控器功能介绍 Transmitter function introduce

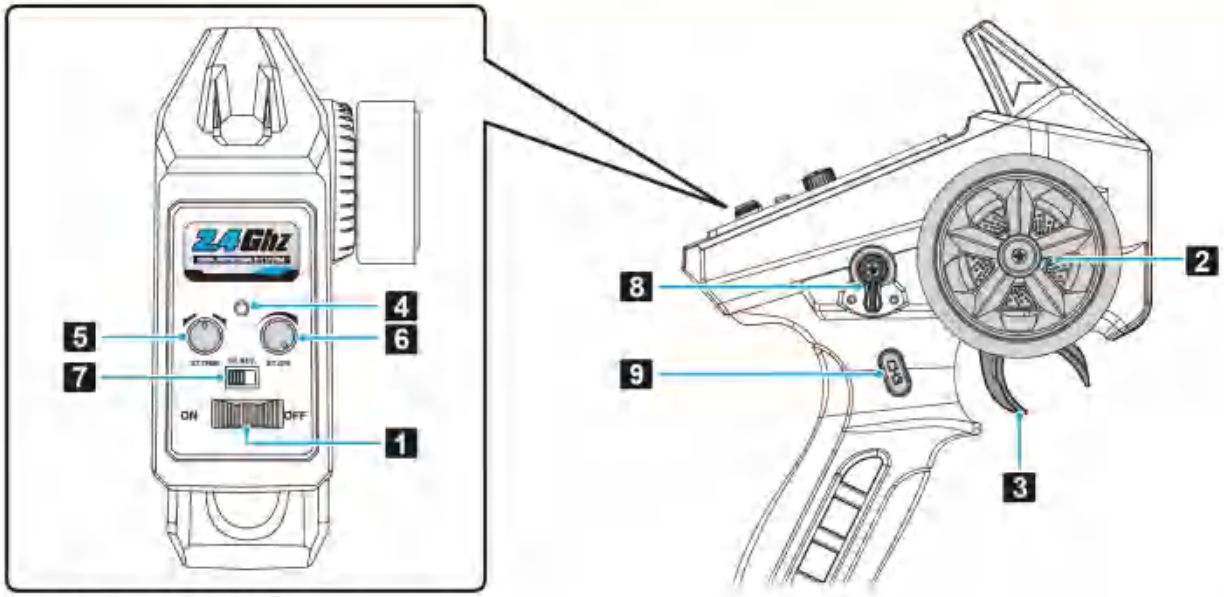

1. 遥控电源开关：打开或关闭遥控电源。
2. 转向轮：当左转转向轮时，模型车左转。当右转转向轮时，模型车右转。
3. 油门扳机：用手指向后扣动遥控器扳机，模型车将向前行驶；用手指向前推动扳机一次为刹车，松手待扳机回归中位后再向前推动，模型车将后退行驶。
4. 电源指示灯：对码时，指示灯先快闪，几秒钟后变为常亮，提示对码成功。当指示灯频率式慢闪，提示电量不足，请及时更换电池。
5. 转向微调旋钮：当车辆无法正常直线行驶时，使用该旋钮进行微调。
6. 转向角度舵量限制：当转动转向轮时，使用"转向角度舵量限制"调整轮胎转动角度大小。
7. 转向逆反向制式开关：对左右转向的正/反向切换。
8. 速度三档开关：速度分快速、中速、慢速。(初学者建议使用慢速熟悉操作)
9. 灯控按键：每按一下"CH3"按键，切换一种灯的模式。

1. Power Switch(On/Off):Slide it to switch on or off power.
2. Steering Wheel: Turn the wheel to the left, the car will turn left; Turn the wheel to the right, the car will turn right.
3. Throttle Trigger: Pull to accelerate,release to slow down, and push it to brake. Center it and then push it a second time to reverse.
4. Power LED: It flashes rapidly during connection. After connection, it stops flashing and keep lights on. Please replace batteries in case the light flash slowly which indicates the power is not enough.
5. Steering Trim: It is used to make the vehicle drive in straight line.Turning the steering trim knob to adjust.
6. Steering angle rudder amount limit: when turning the steering wheel, use "steering angle rudder amount limit" to adjust the tire rotation angle.
7. Steering Reverse Switch: It allows you to electronically switch the direction of the steering servo travel.For instance,if you move the steering wheel to the right and your vehicle turns left,flip this switch to make it turn right.
8. Speed three gear switch: speed is divided into fast speed, medium speed and slow speed. (beginners are recommended to use slow familiar operation)
9. Light control button: Press the "CH3" button once to switch the mode of one lamp.

操作模型车 To drive the vehicle

1 打开遥控器电源开关和模型车电源开关 Switch on the transmitter, and then the vehicle.

先打开遥控器电源开关，遥控器指示灯闪烁，提示正搜索需要对码的模型车，接着长按2-3秒模型车电源开关，此时遥控器指示灯转为常亮，提示对码成功。
Slide the ON/OFF switch to switch on the transmitter. Press and hold the button on the ESC/Receiver for 2-3 seconds to switch on the ESC/Receiver. The transmitter indicator turns into at this time often bright, hint is successful to the code.

2 检查油门操作 Checking up the throttle operation

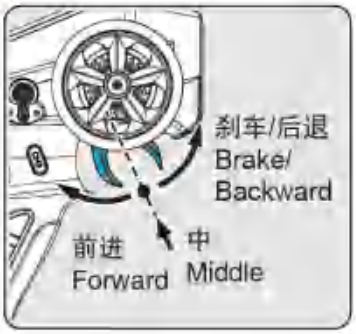

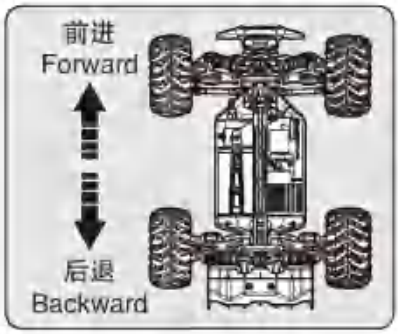

用手指向后扣动遥控器扳机，模型车将向前行驶；用手指向前推动扳机一次为刹车，松手待扳机回归中位后再向前推动则为后退行驶。
When you pull the throttle trigger, your vehicle accelerates forward. When you push the throttle trigger,your vehicle brakes. When you release the trigger then push again, your vehicle goes.

3 转向微调旋钮 Turning the steering trim to align the front wheels

在没有操控转向轮的情况下，模型车前轮未处于中心位置时：若前轮偏向左侧，请顺时针转动转向微调旋钮进行微调；若前轮偏向右侧，请逆时针转动转向微调旋钮进行微调。
If the front wheels are unaligned and off the center line the time you do not move the steering wheel on the transmitter, please turn the steering trim knob to align front wheels in line.Turn the steering trim clockwise to align them if the front wheels point to the left. Turn the steering trim anti-clockwise to align them if the front wheels point to the right.

4 转向角度舵量限制 Steering angle rudder amount limit

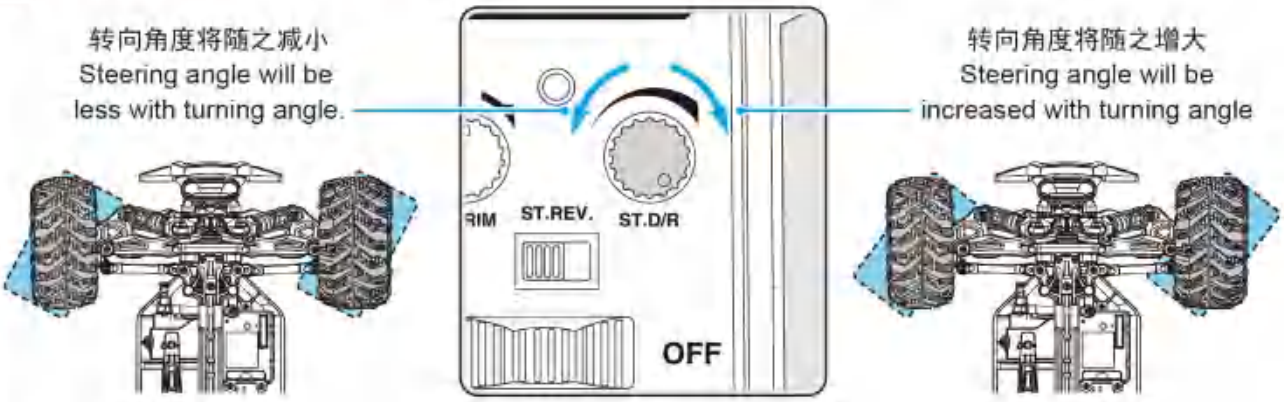

当转动转向轮时，使用“转向角度舵量限制”调整轮胎转动角度大小。
Steering angle rudder amount limit: when turning the steering wheel, use "steering angle rudder amount limit" to adjust the tire rotation angle.

5 转向逆反向制式开关 Turning the steering trim to align the front wheels

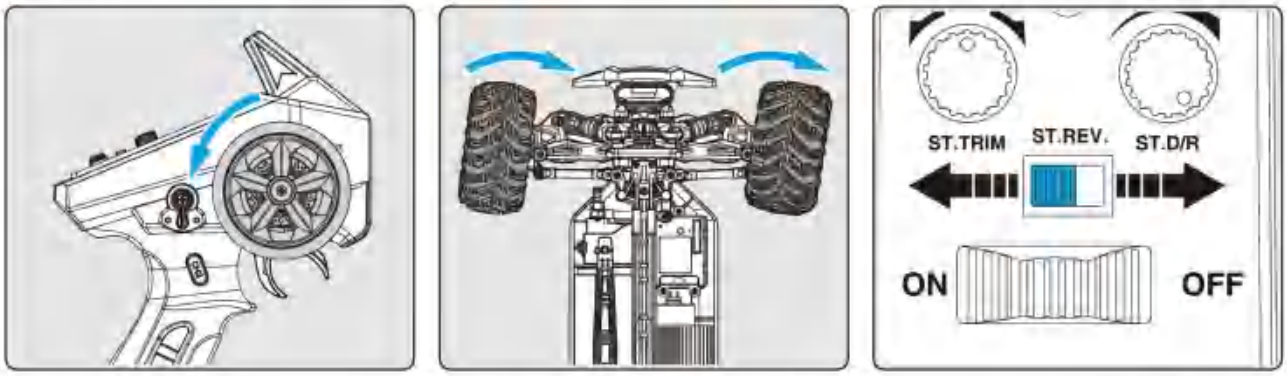

如果遥控转向轮的操作与模型车转向方向不一致。（如当左转转向轮时，模型车却右转。）请调整转向逆反向制式开关，直至操作和模型车行驶一致。
If you move the steering wheel to the right and your vehicle turns left,flip the steering reverse switch to make your vehicle turn right. If you move the steering wheel to the left and your vehicle turns right, flip the steering reverse switch to make your vehicle turn left.

6 速度三档开关 Speed three gear switch

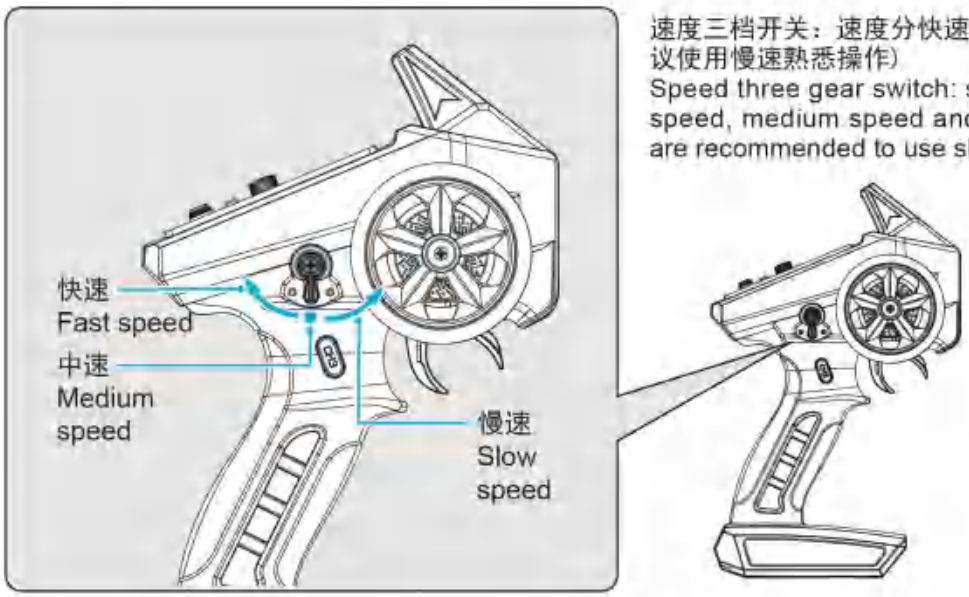

速度三档开关：速度分快速、中速、慢速。（初学者建议使用慢速熟悉操作）
Speed three gear switch: speed is divided into fast speed, medium speed and slow speed. (Beginners are recommended to use slow familiar operation)

结束操作模型车 To stop driving the vehicle

1 关闭遥控器电源开关和模型车电源开关 Switch OFF the transmitter, and then the vehicle.

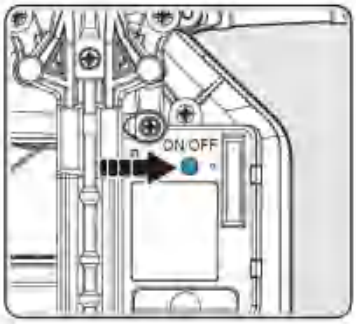

长按2-3秒模型车电源开关，关闭模型车电源模型车电源指示灯熄灭。接着关闭遥控器电源开关。

Press and hold the button on the ESC/Receiver for 2-3 seconds to switch off the ESC/Receiver. Slide the ON/OFF switch to switch off the transmitter.

2 检查和清理 Check and straighten out

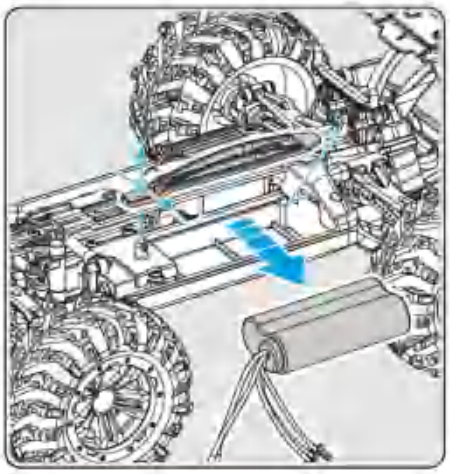

1. 检查模型车是否有零件损坏和松动请及时修理或更换。用软刷和软布清理车身污垢后，将其存放于阴凉处，远离高温热源，远离儿童触手可及之处。
2. 请将电池从模型车上取出，存放于阴凉处。

1. Clean the vehicle with the soft cloth and brush,and store it in dry,cool and clean place away from the reach of children.
2. Disconnect and take out the battery pack if not in use.

注：每次使用前，请先将电池充满电量。当模型车速度明显下降时，建议立刻对模型车电池充电，以免电池过放而损伤电池。若电池长时间闲置，需定期1-2周左右充电。

Note: please fully charge the battery before each use. When the speed of the model car drops significantly, it is recommended to charge the model car battery immediately to avoid battery damage due to over discharge of the battery. If the battery is idle for a long time, it needs to be charged regularly for about 1-2 weeks.

模型车的维护 Maintenance guide

1. 若长时间不使用，请将模型车和遥控内电池取出。
2. 每次使用前，确保电池是充满电的状态。
3. 每次使用前或使用后，仔细检查模型车电路接线是否紧固，没有脱落的接头。仔细检查车轮是否紧固，松垮的车轮会造成传动轴，车轮杯或轮座等部件的过度磨损。
4. 检查传动齿轮是否需要上润滑油。
5. 闲置的电池需要充电后（充至50-60%电量）保存于干燥，阴凉处，避免儿童触及。
6. 每次使用后，请仔细检查模型车各部件是否完整，及时维修或更换。用细毛刷清扫模型车内的沙土，泥灰等污垢，然后用软布擦拭干净。

1. If it is not used for a long time, please take out the battery in the model car and remote control.
2. Make sure the battery is fully charged before each use.
3. Before or after each use, carefully check whether the circuit wiring of the model car is fastened and there is no dropped connector. Carefully check whether the wheels are fastened. Loose wheels will cause excessive wear of transmission shaft, wheel cup or wheel seat.
4. Check whether the transmission gear needs to be lubricated.
5. The idle battery needs to be stored in a dry and cool place after charging (up to 50-60% of the power) to avoid children's touch.
6. After each use, please carefully check whether all parts of the model car are complete and repair or replace them in time. Use a fine brush to clean the sand, dirt and other dirt in the model car, and then use a soft cloth to wipe it clean.

模型车电池充电 Charging the battery pack

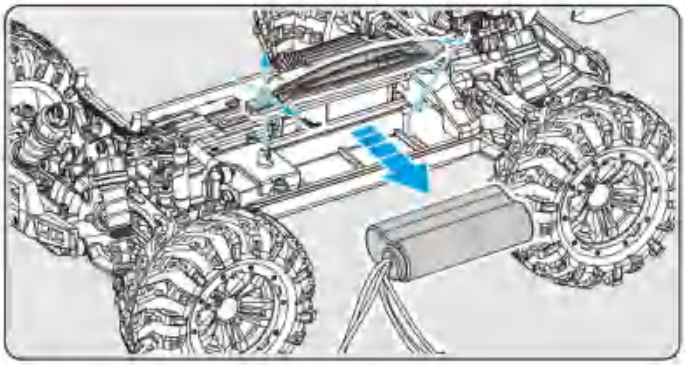

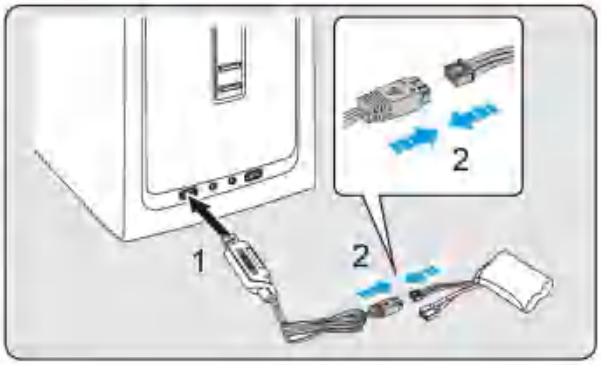

1. 如图所示，取下底盘电池。
2. 连接USB充电线，将USB线插入USB充电设备口，进行充电。
3. 充电时间约为4-4.5小时。
4. USB指示灯说明：

1) 当待机时(USB插上电源，没接上电池时)，红灯(电源灯)常亮，绿灯(充电指示灯)快闪几秒后熄灭。
2) 电池充电时，红灯(电源灯)常亮，绿灯(充电指示灯)频率式慢闪，提示电池正在正常充电。
3) 电池充满电后，红灯(电源灯)熄灭，绿灯停止闪烁，变为常亮状态。

1. Remove the chassis battery as shown in the figure.
2. Connect the USB charging cable, insert the USB cable into the USB charging device port to charge.
3. The charging time is about 4-4.5 hours.
4. USB indicator Description:

1) When standby (USB is plugged in and battery is not connected), the red light (power light) is always on, and the green light (charging indicator) flashes for a few seconds and then goes out.
2) When charging the battery, the red light (power light) is always on, and the green light (charging indicator light) flashes slowly in frequency mode, indicating that the battery is charging normally.
3) After the battery is fully charged, the red light (power light) goes out, the green light stops flashing and becomes normally on.

温馨提示
Reminder

可通过连接手机充电配置插头（标准5V,2A),完成充电操作，以便缩短充电时间。

The charging operation can be completed by connecting the mobile phone charging configuration plug (standard 5V, 2a), so as to shorten the charging time.

⚠警告

-切勿使用非本厂版充电电池，以免模型车性能受损。充电时切勿无人看管。

-儿童在成人指导和监护下方能进行充电操作。切勿使用漏液或包装破损的电池。

-Do not use a non factory rechargeable battery to avoid damage to the performance of the model car. Do not leave unattended when charging.

-Children can charge under the guidance and supervision of adults. Do not use batteries with liquid leakage or damaged packaging.

解决问题指引 Solutions to problems

问题 Problem	原因 Cause	处理方法 Processing Method
模型不动 Model fails to move	1.模型中电池电量不足。 The model is of low battery.	1.请将旧电池取下充电，和安装充满电的电池或没有装入电池。 Please remove the old batteries to charge, and put in fully-charged batteries or no batteries.
	2.发动机损坏电机损坏。 The engine or the motor is damaged.	2.请及时替换新的电机。 Please replace the motor as soon as possible.
	3.电机损坏。 The motor is damaged.	3.如果传动波箱，有异响时或者稍微低速行驶一下就会变热的话请更换电机。 Please replace the engine if the transmission box produces abnormal noises or gets heated soon when the model runs at a low speed.
	4.电子调速器损坏。 The electronic speed regulator is damaged.	4.请咨询厂家是否有维修好的可能，如不行请重新购买新的。 Please consult the manufacturer whether it can be recovered. If not, get a new one.
	5.电线破损。 The wire is damaged.	5.请重新连接破损的部位并做好绝缘处理。 Please reconnect the damaged part and insulate it.
	6.断线头 The connector is damaged.	6.请检查电机电源线是否断开，如断开请重新焊接。 Please check whether the power cord of the motor is disconnected. If yes, re-weld it.
	7.电源线头松脱。 The power connector is loose.	7.检查各部位线头的接触是否存在松脱现象，如松脱，请重新插紧并固定好。 Please check whether the contact between connectors of each part is loose. If yes, please re-plug and fix them.
失去控制 Model out of control	1.车用电池和发射机的电池电量是否变低。 Whether the model or the engine is of low battery.	1.车用电池请充电，或安装充满电电池，请更换新的发射机电池。 Please charge the model batteries, or put in fully-charged batteries, or replace them with new engine batteries.
	2.接收机损坏。 The receiver is damaged.	2.请咨询厂家是否有维修好的可能，如不行请重新购买新的。 Please consult the manufacturer whether it can be recovered. If not, get a new one.
	3.扭力不足。 There lacks torsion.	3.请在活动部件涂上适当润滑油脂。 Please apply lubricant to the moving members.
	4.旋转部件润滑不当。 The rotating member is not lubricated properly.	4.请查看舵机是否出现故障，需要及时更换新的转向舵机。 Please check whether the steering gear is out of order, and replace it with a new one when necessary.
	5.转向部件损伤。 The steering part is damaged.	5.舵机上的摆臂部件损坏，确定是否需要更换新部件。 The swing arm on the steering gear is damaged. Please confirm whether to replace it with a new one.
	6.另外一种接收频率的无线电信号干扰附近的电子设备过多。 Radio signals at another receiving frequency interfere too much with nearby electronics.	6.可尝试在不同的位置来操作您的模型去另外一个可避免电磁场干扰的场地进行行驶。 Try to operate your model at a different location that avoids electromagnetic interference.
	7.旋转部件装配不当又或发生磨损。 The rotating member is not assembled properly or is worn.	7.请仔细排查发生问题的部位后，进行查看并重新组装。如发现齿轮等配件磨损严重时，请重新更换新的配件。分离操作与组装可参考说明书中正确组装方法。 Please troubleshoot carefully the part that fails, and check and re-assemble it. If the gear or any other accessory is badly worn, please replace it with a new one. Disassembly and assembly may refer to the proper instructions in the manual.
	8.超过遥控距离。 It's beyond the remote control range.	8.请将车的遥控距离始终保持在有效范围内。 Maintain the remote control of the model within the effective range.

组 装 图 Assembly view

1 减震器的装配 Shock Absorber

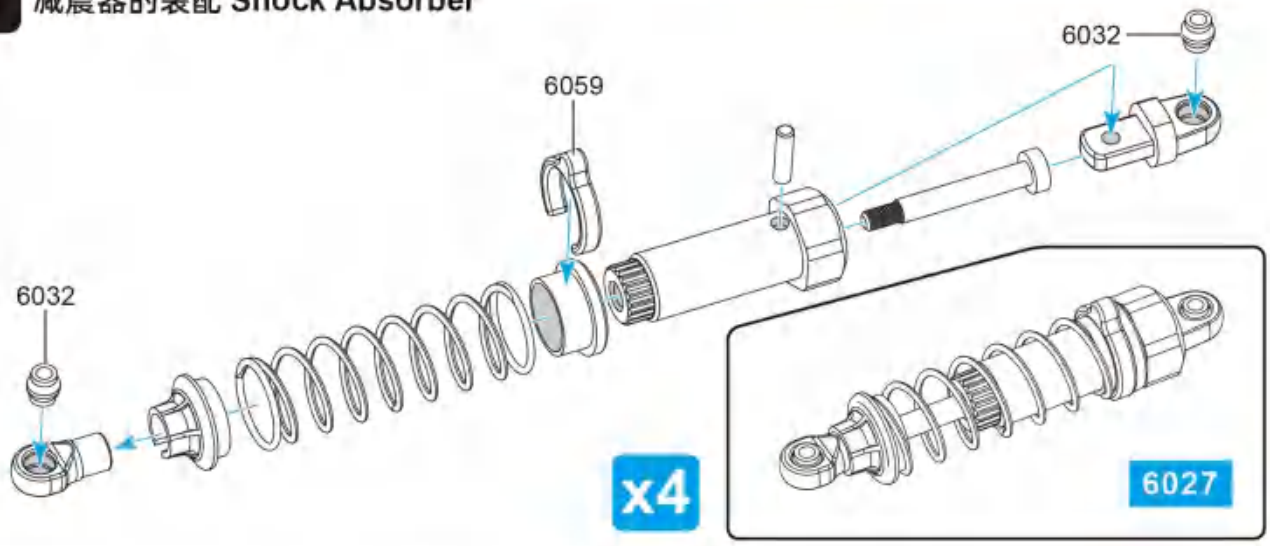

2 有刷差速器的装配 Brush diff. Complete [Fr./Rr.]

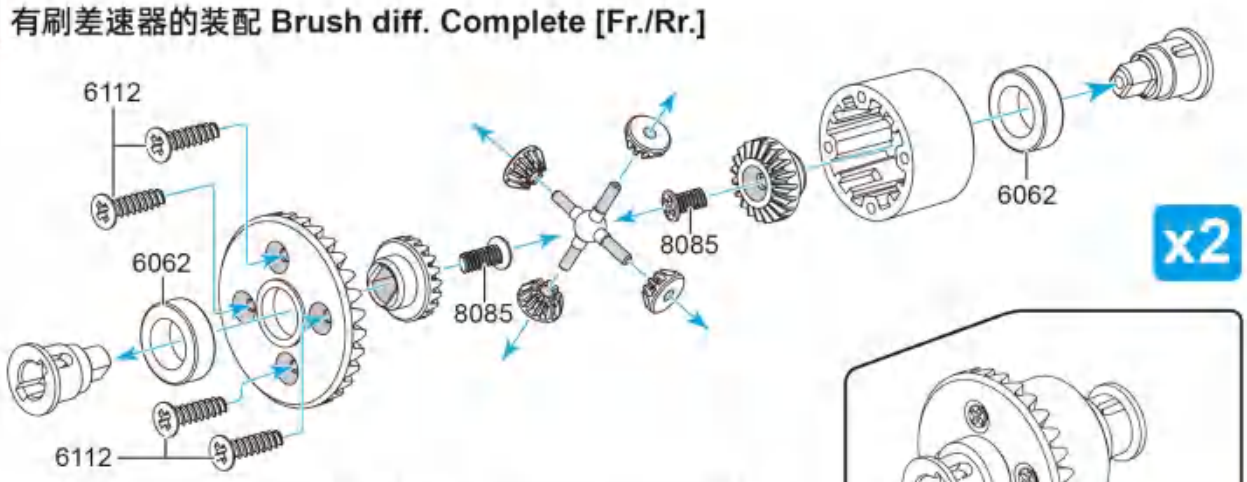

4 — 6112 KBH 2.0x12 mm 沉头螺丝 Countersunk head screw

2 — 8085 KBH 2.3x10 mm 自攻圆头螺丝 Self tapping round head screw

3 无刷差速器的装配 Brushless diff. Complete [Fr./Rr.]

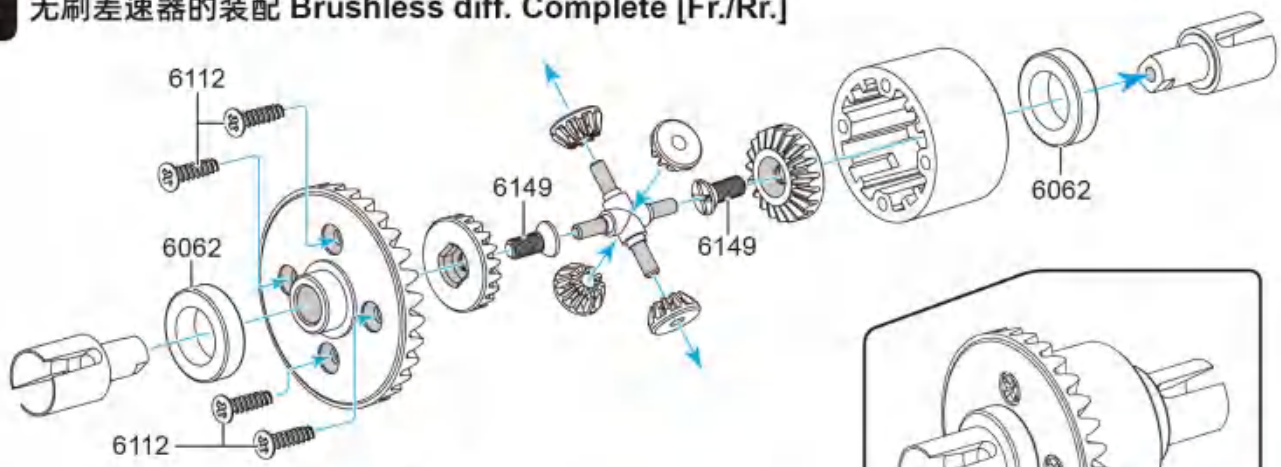

4 — 6112 KBH 2.0x12 mm 沉头螺丝 Countersunk head screw

2 — 6149 KM 2.5x6 mm 十字沉头机牙螺丝 Cross countersunk head machine screw

4 有刷中传动装置 Brush center drive shaft assembly

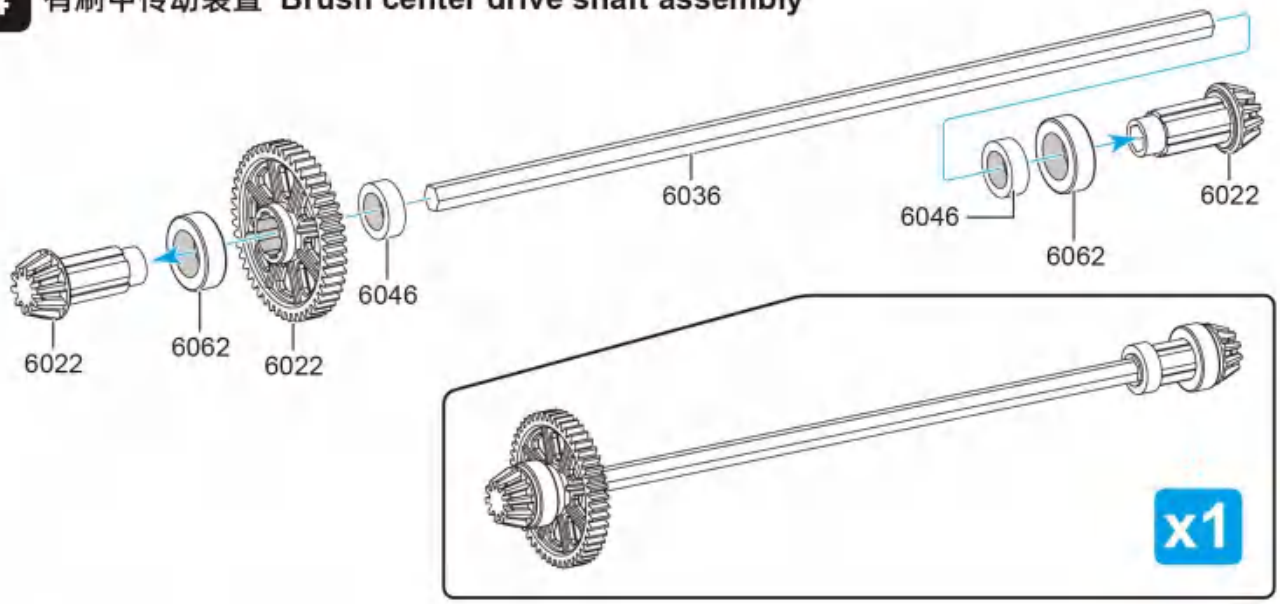

5 无刷中传动装置 Brushless center drive shaft assembly

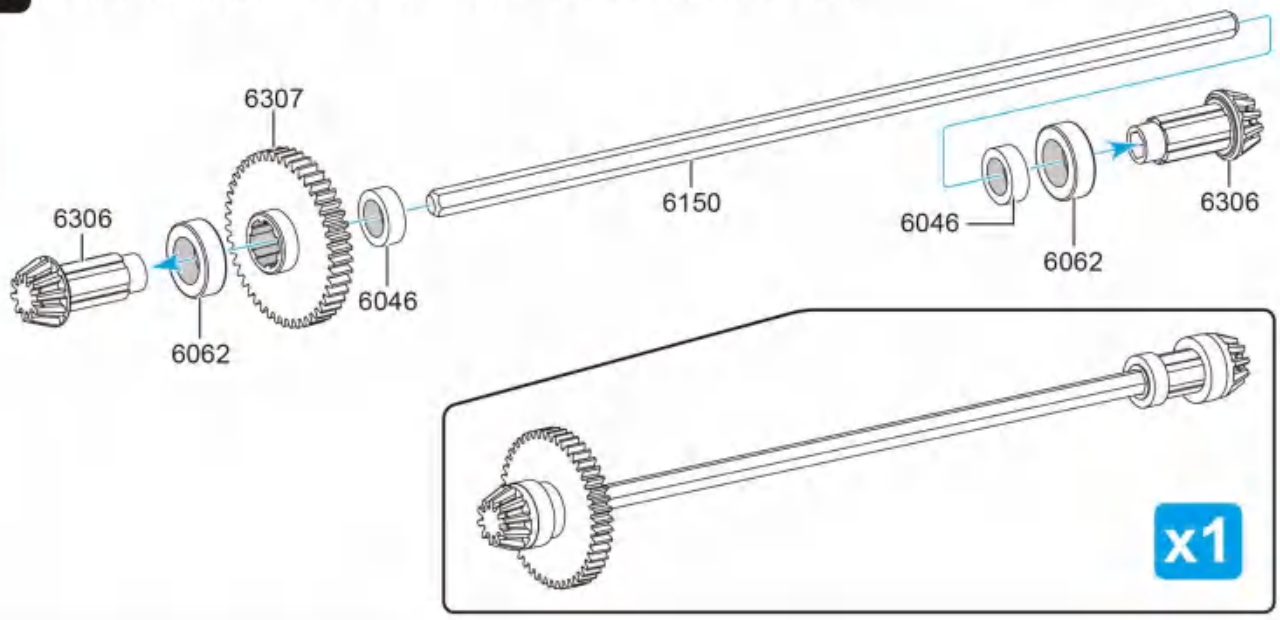

6 五线舵机缓冲装置的装配 Five wire servo saver assembly

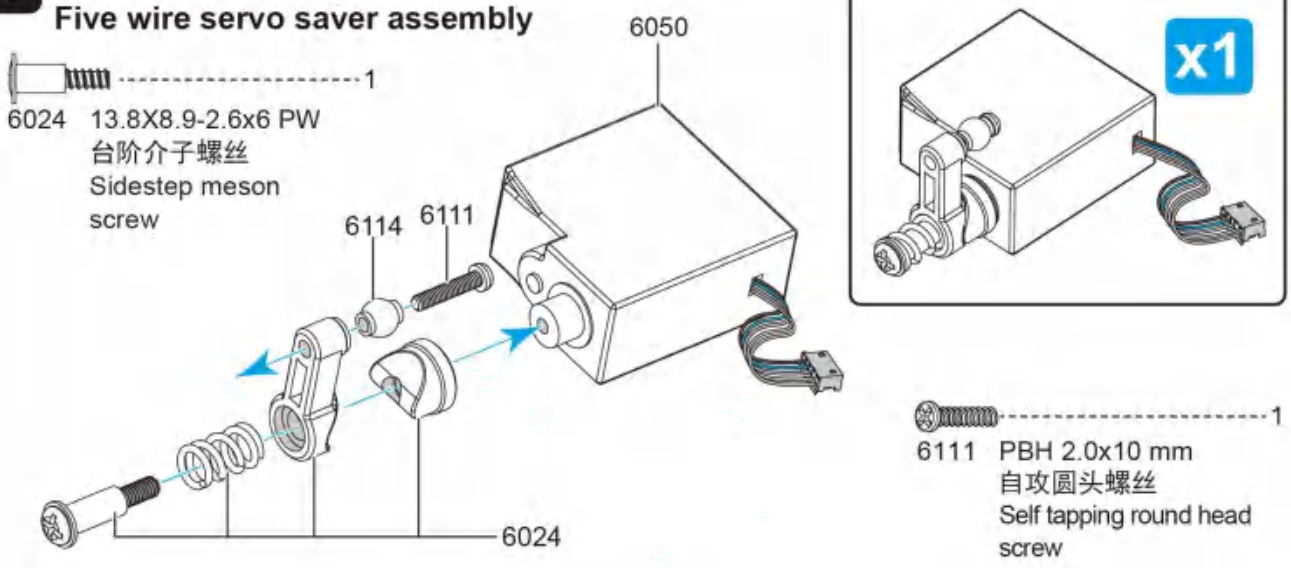

7 三线舵机缓冲装置的装配
Three wire servo saver assembly

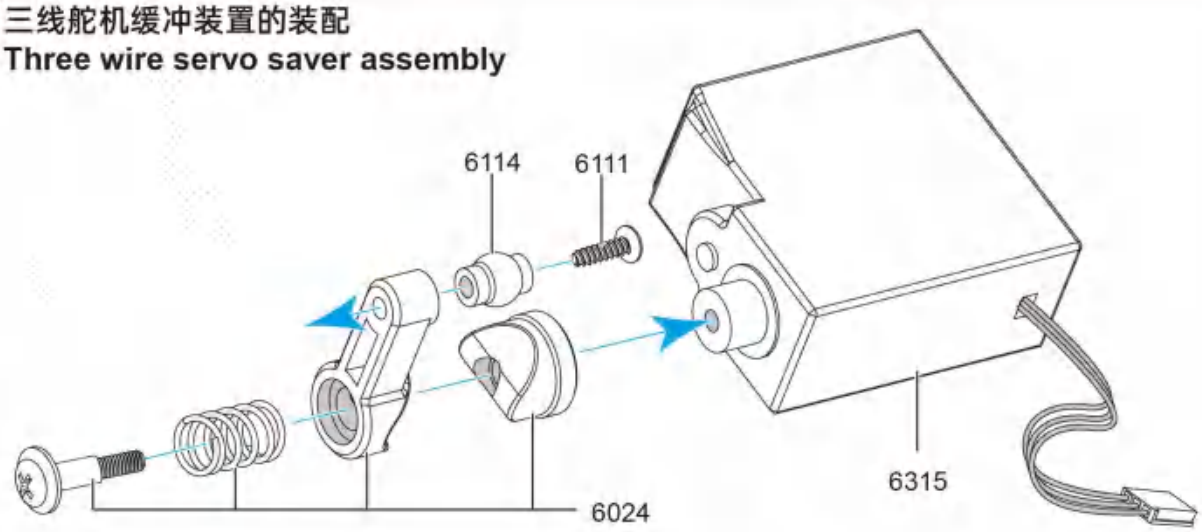

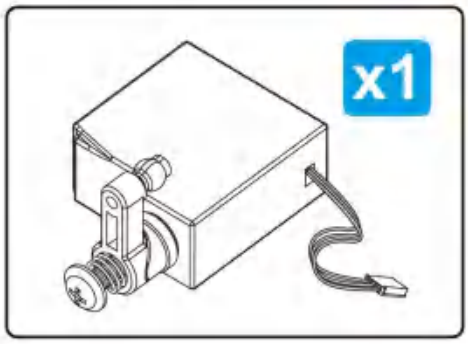

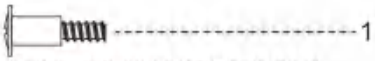
1

6024 13.8X8.9-2.6x6 PW
台阶介子螺丝
Sidestep meson screw

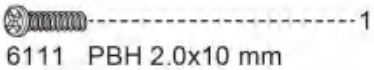
1

6111 PBH 2.0x10 mm
自攻圆头螺丝
Self tapping round head screw

8 有刷马达的装配 Assembly of brush motor

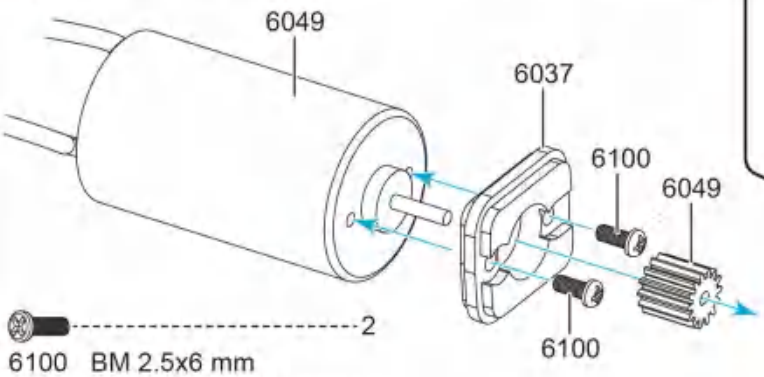

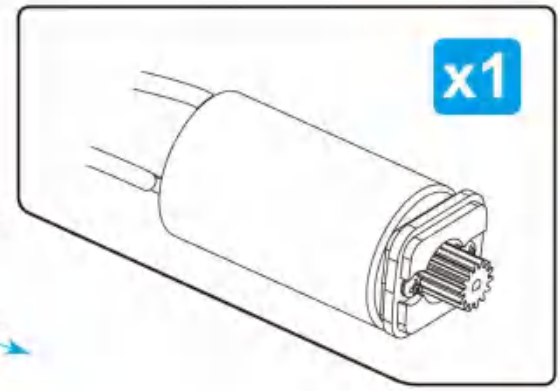

2

6100 BM 2.5x6 mm
机丝螺丝 Machine screw

9 无刷马达的装配 Assembly of Brushless Motor

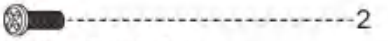
2

6148 BM 2.5x8 mm
机丝螺丝 Machine screw

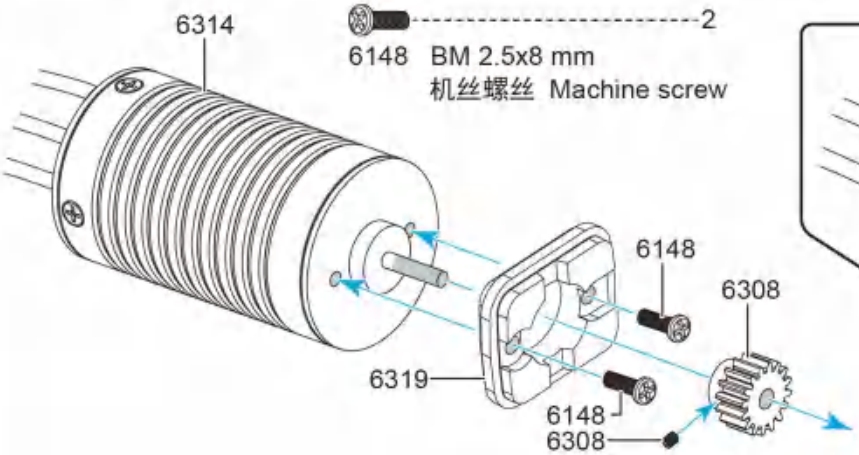

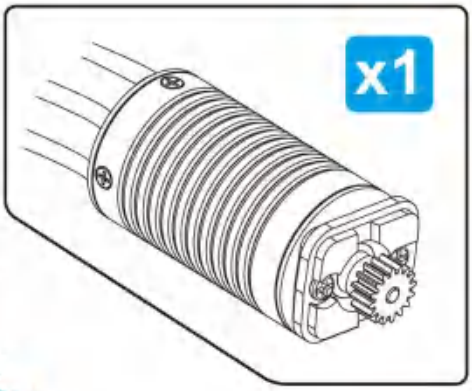

10 有刷马达的装配 Assembly of brush motor

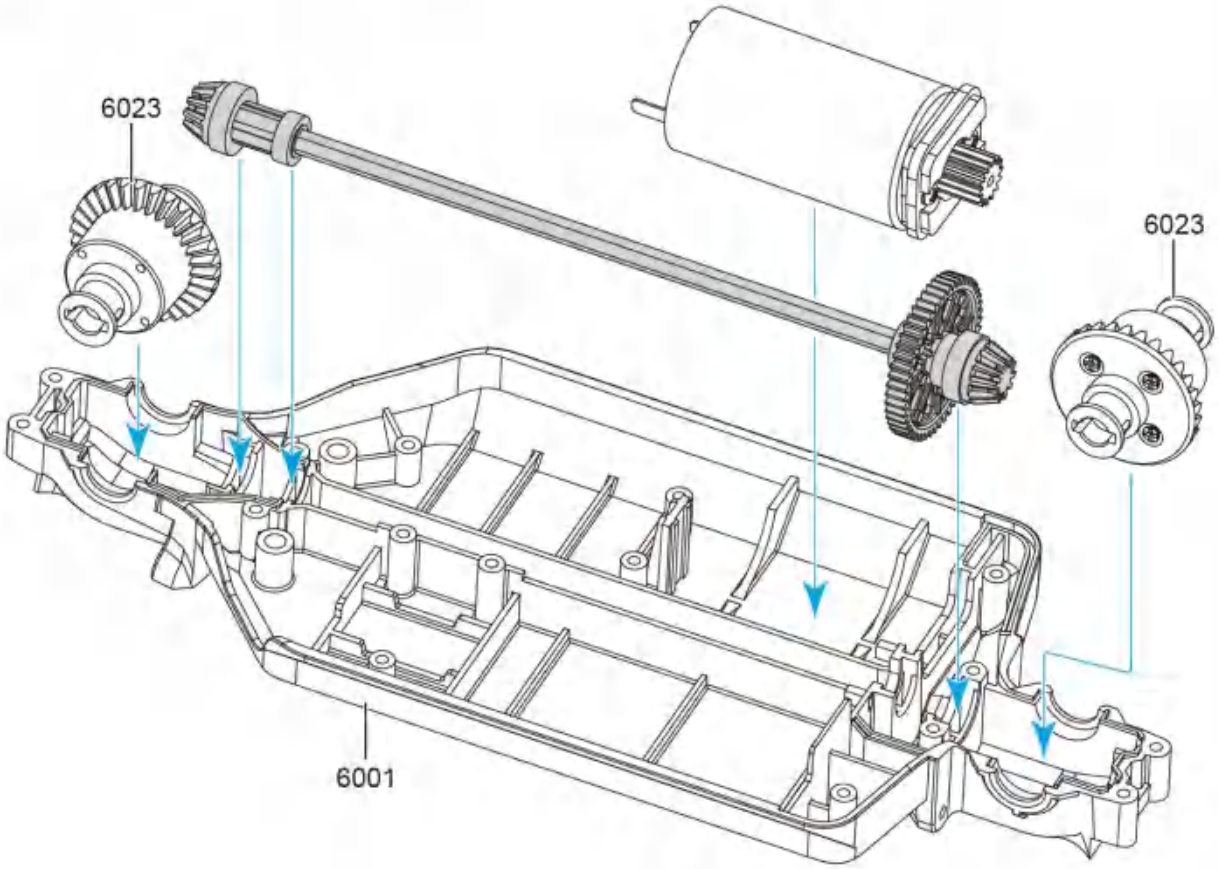

11 无刷马达的装配 Assembly of brushless motor

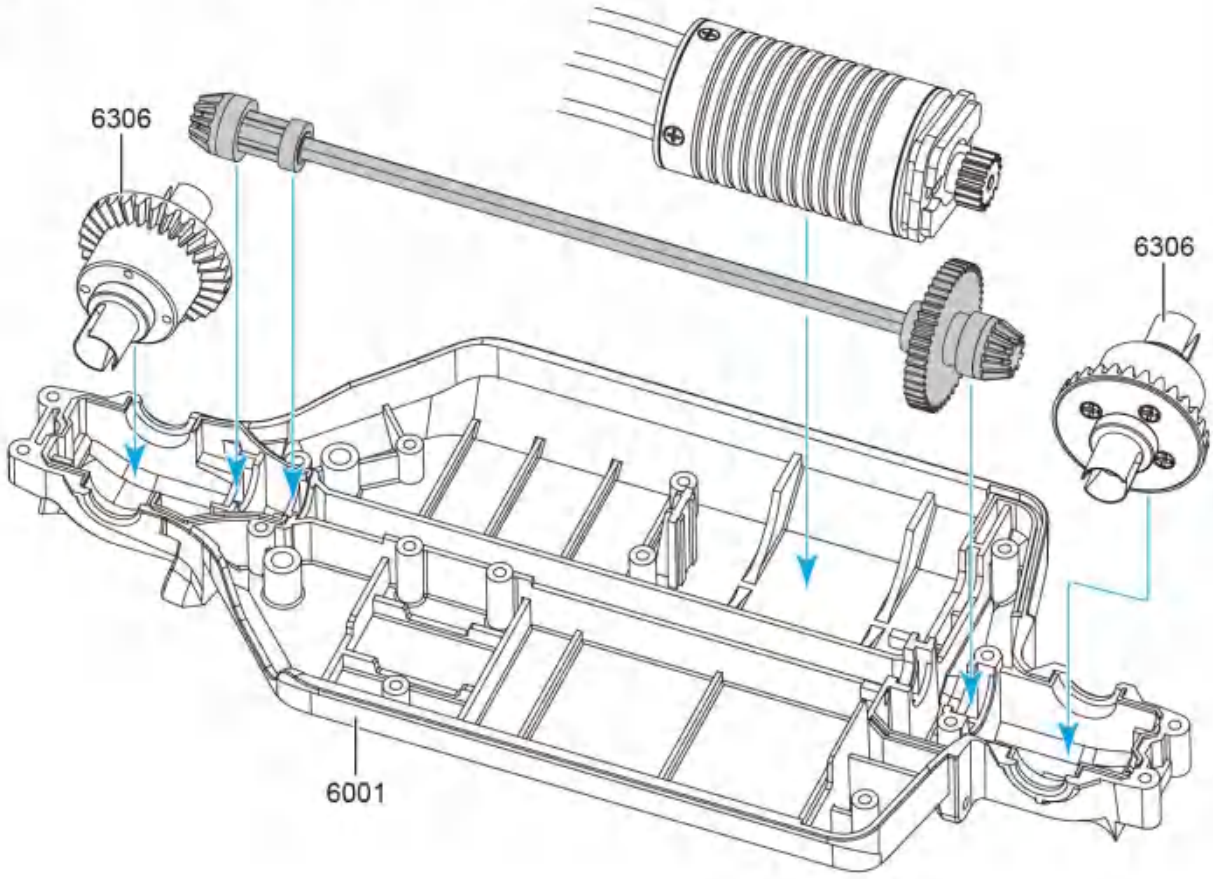

12 波箱盖的装配 Gear box housing mount

6101 ---------- 2

6101 PBH 2.6x8 mm
自攻圆头螺丝
Self tapping round head screw

6103 ---------- 2

6103 PBH 2.6x10 mm
自攻圆头螺丝
Self tapping round head screw

13 安装转向装置 Steering assembly

6106 ---------- 2

6106 PWB介(Meson)8 2.6x6 mm
介子螺丝 Meson screw

6111 ---------- 1

6111 PBH 2.0x10 mm
自攻圆头螺丝
Self tapping round head screw

14 舵机的装配 Receiver assembly

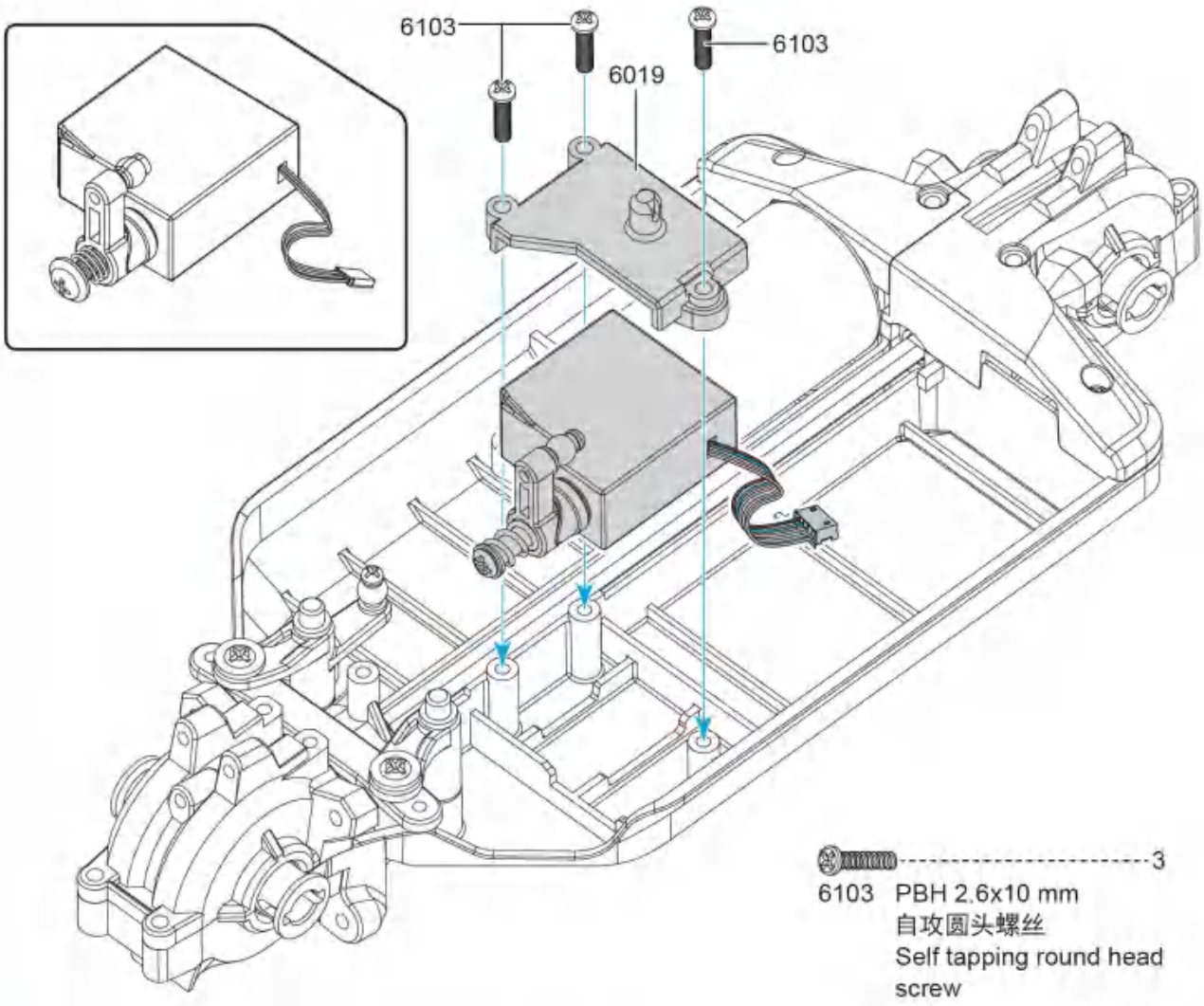

15 安装转向连杆 Steering connecting rod assembly

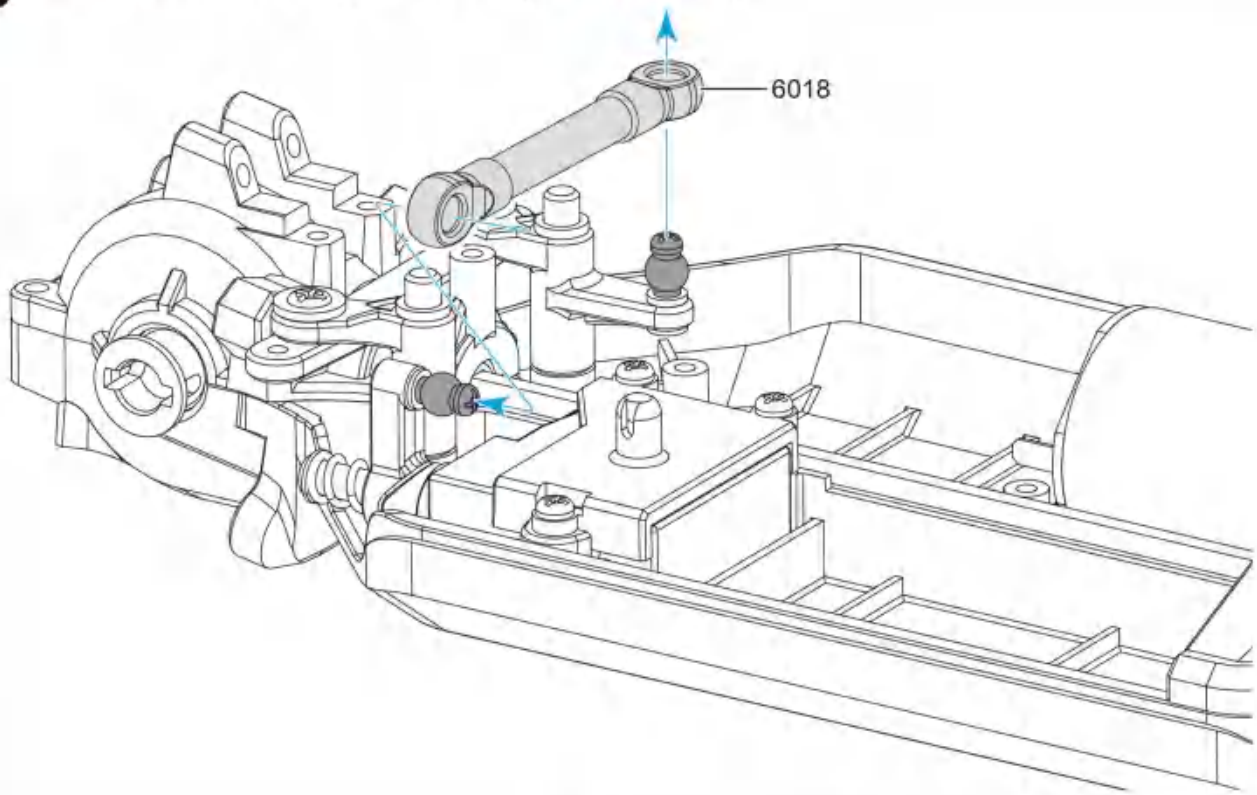

16 安装二楼板 Upper deck installation

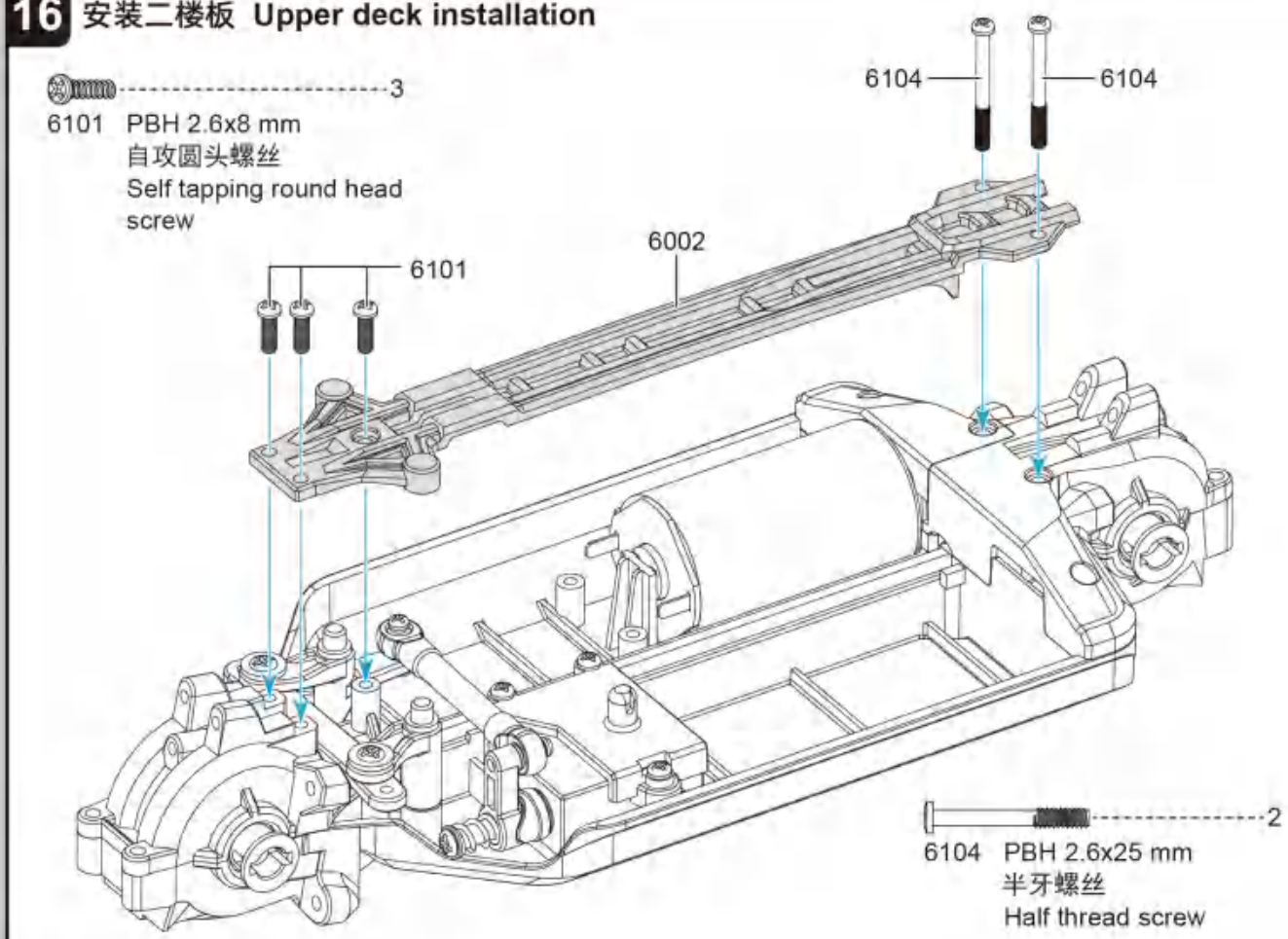

17 安装电调 ESC / Receiver installation

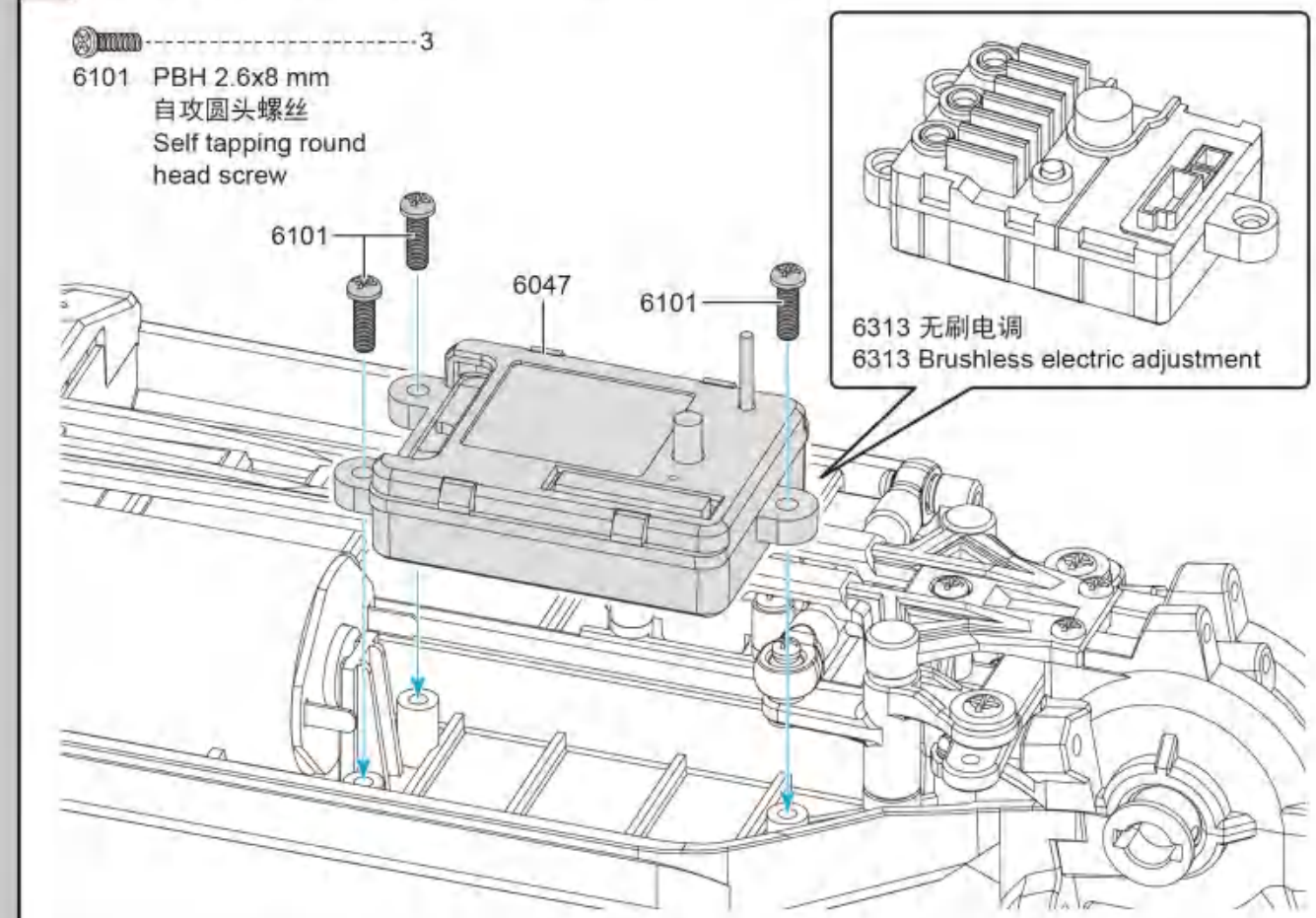

18 前减震支架的装配 Front shock tower installation

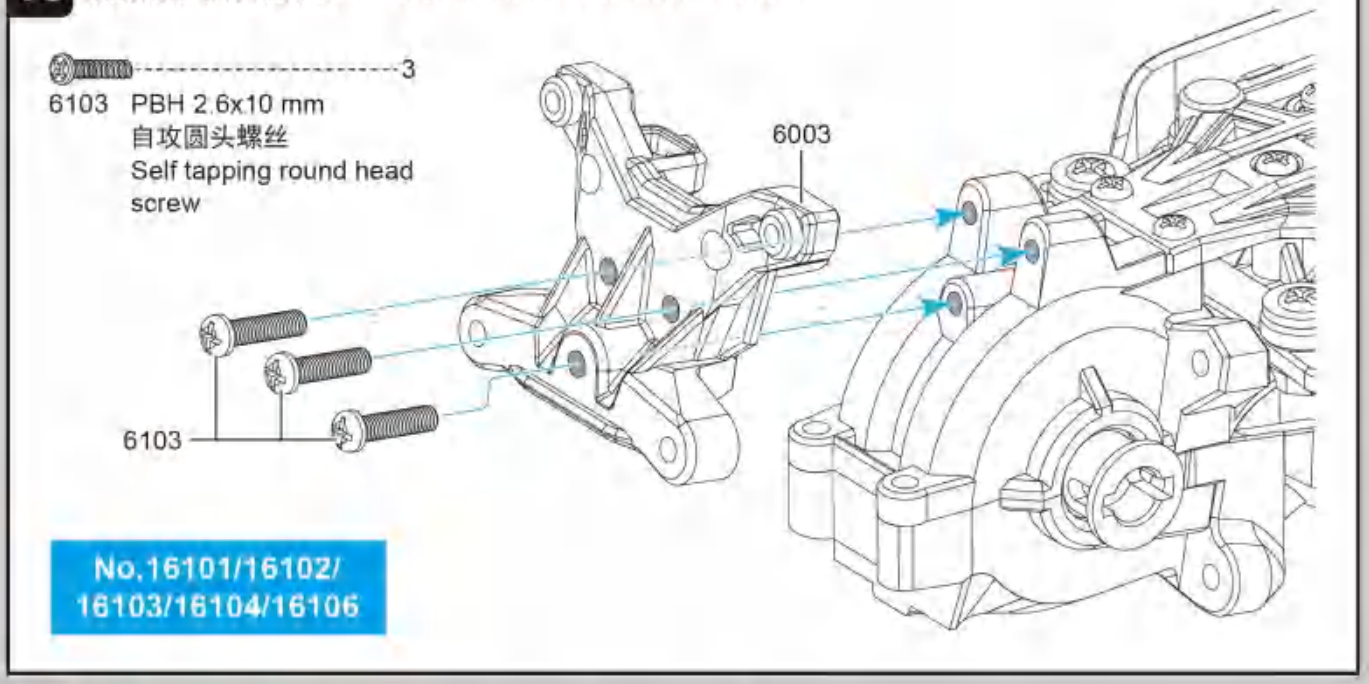

19 前车悬挂的装配1 Front suspension assembly 1

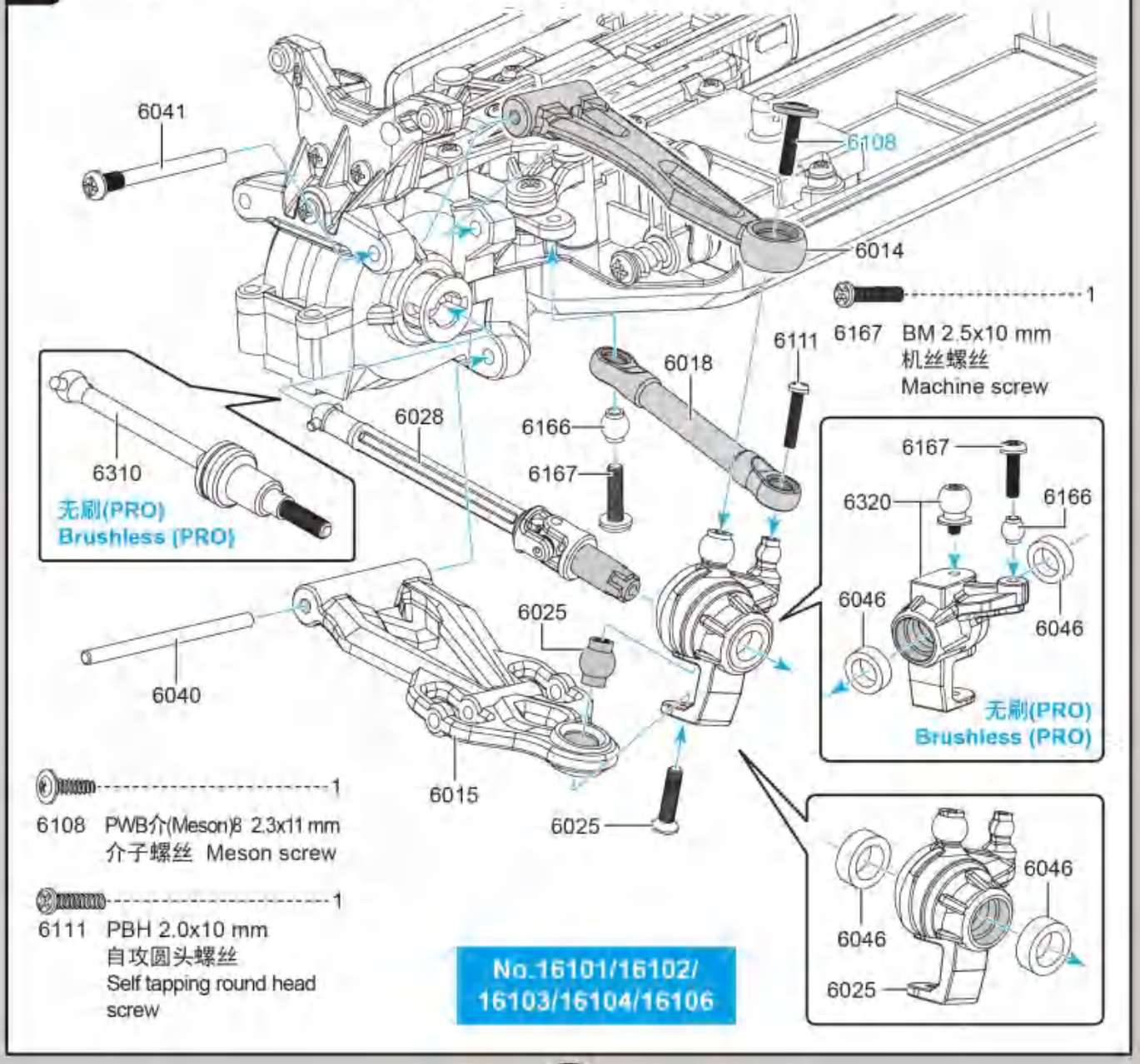

19 前车悬挂的装配2
Front suspension assembly 2

No.16101/16102/16103/16104/16106

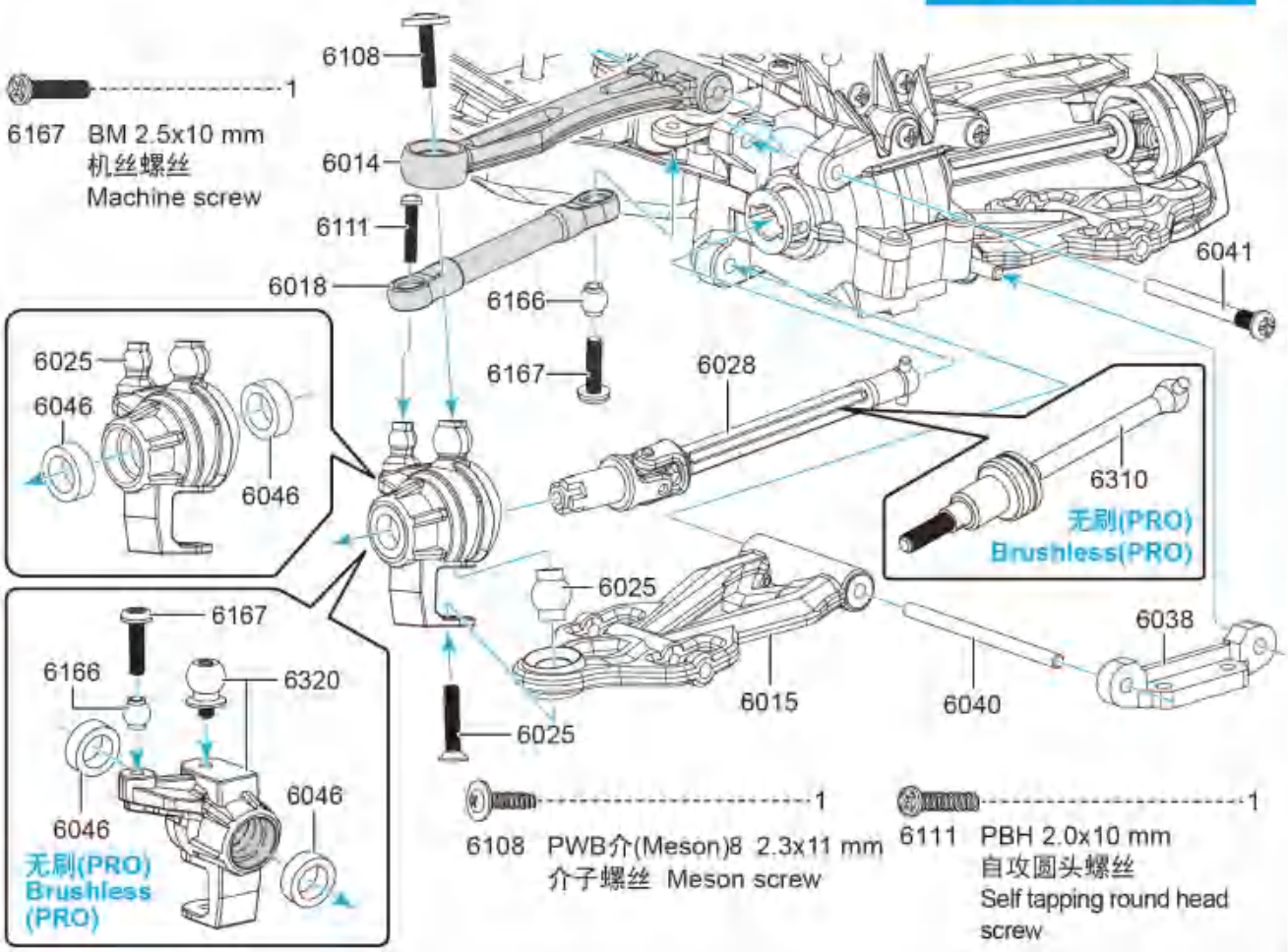

6167 BM 2.5x10 mm ---------- 1
机丝螺丝
Machine screw

6108 PWB介(Meson)8 2.3x11 mm ---------- 1
介子螺丝 Meson screw

6111 PBH 2.0x10 mm ---------- 1
自攻圆头螺丝
Self tapping round head screw

20 安装前减震器 Front suspension assembly

No.16101/16102/16103/16104/16106

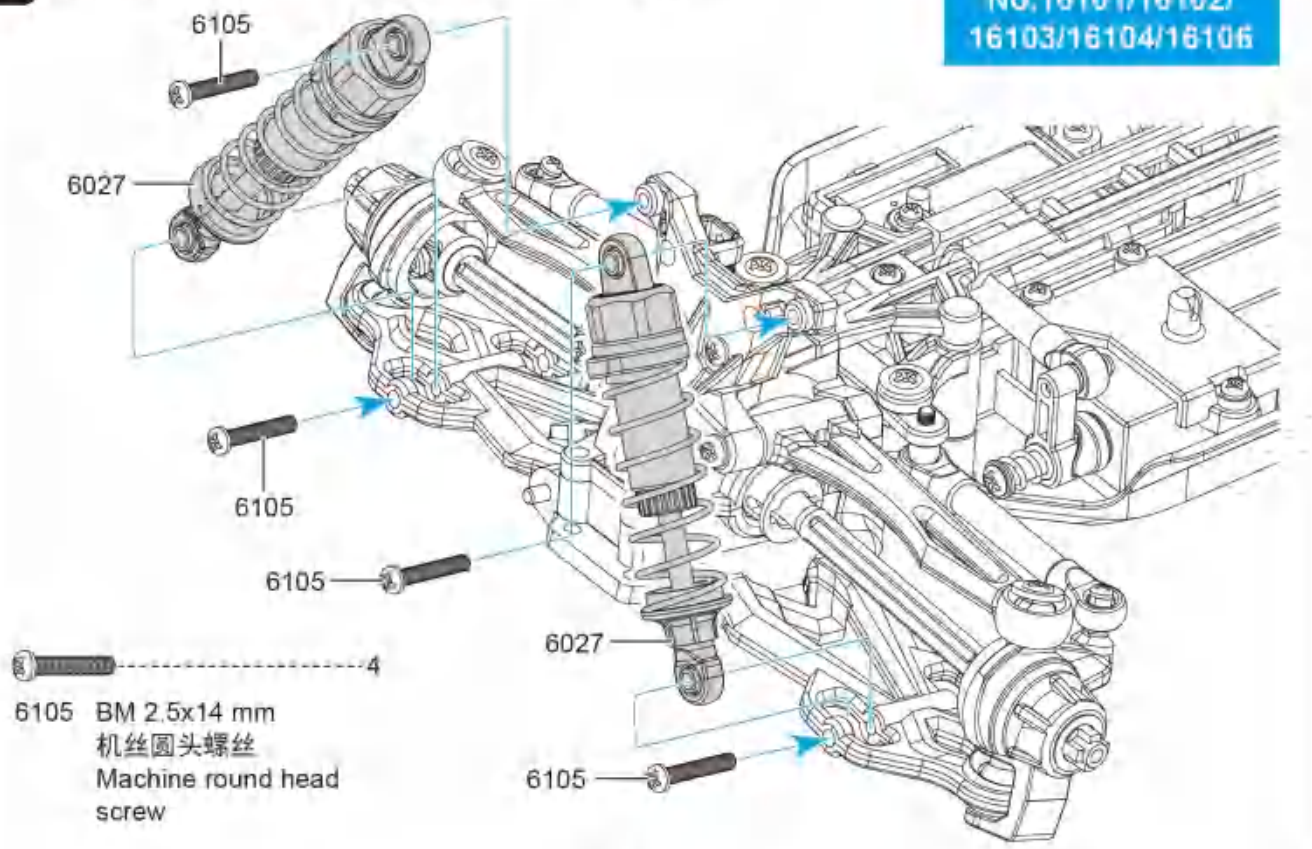

6105 BM 2.5x14 mm ---------- 4
机丝圆头螺丝
Machine round head screw

21 前防撞组件的装配 Front bumper assembly installation

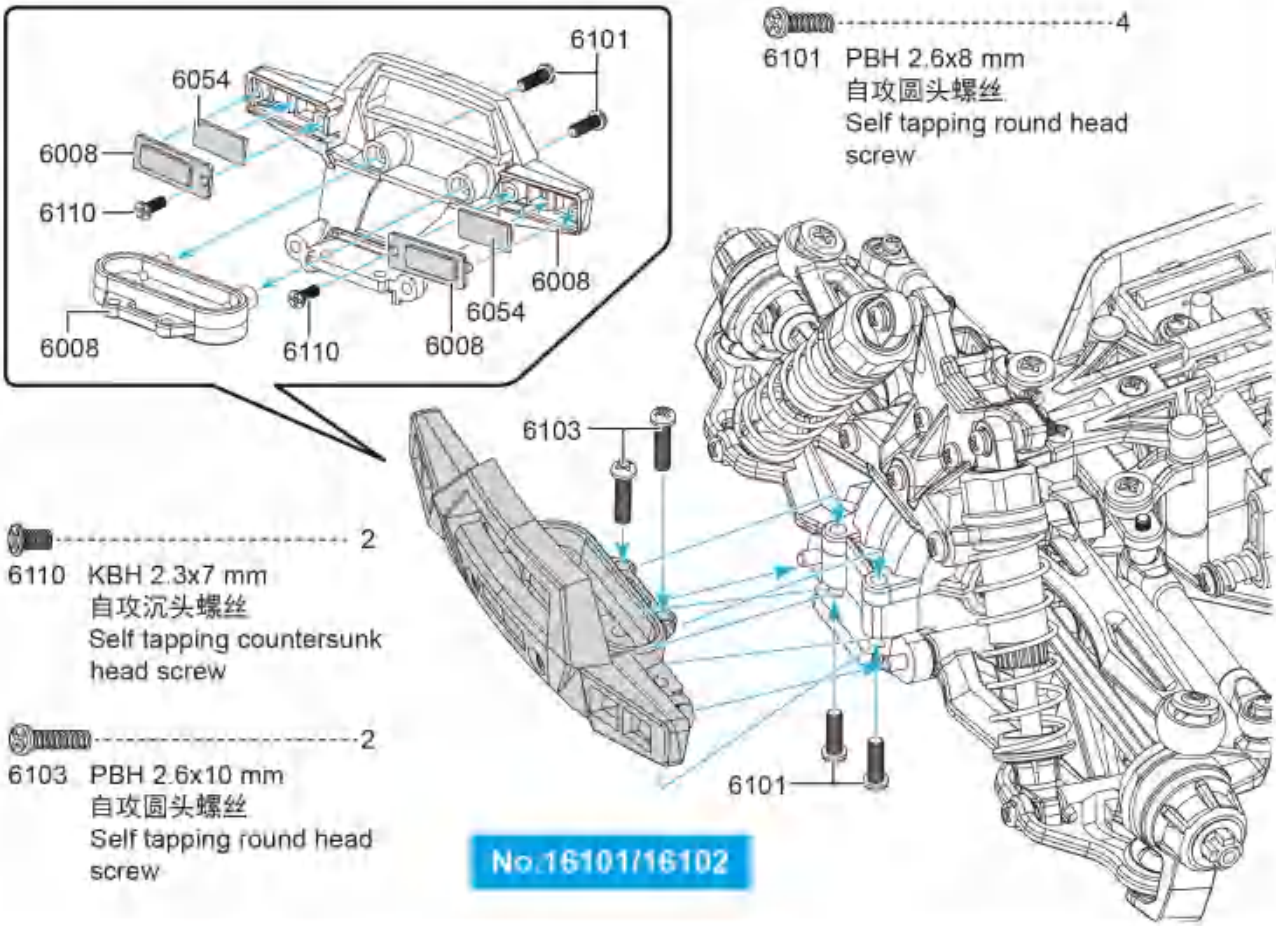

4
6101 PBH 2.6x8 mm
自攻圆头螺丝
Self tapping round head screw

2
6110 KBH 2.3x7 mm
自攻沉头螺丝
Self tapping countersunk head screw

2
6103 PBH 2.6x10 mm
自攻圆头螺丝
Self tapping round head screw

No.16101/16102

22 前防撞组件的装配 Front bumper assembly installation

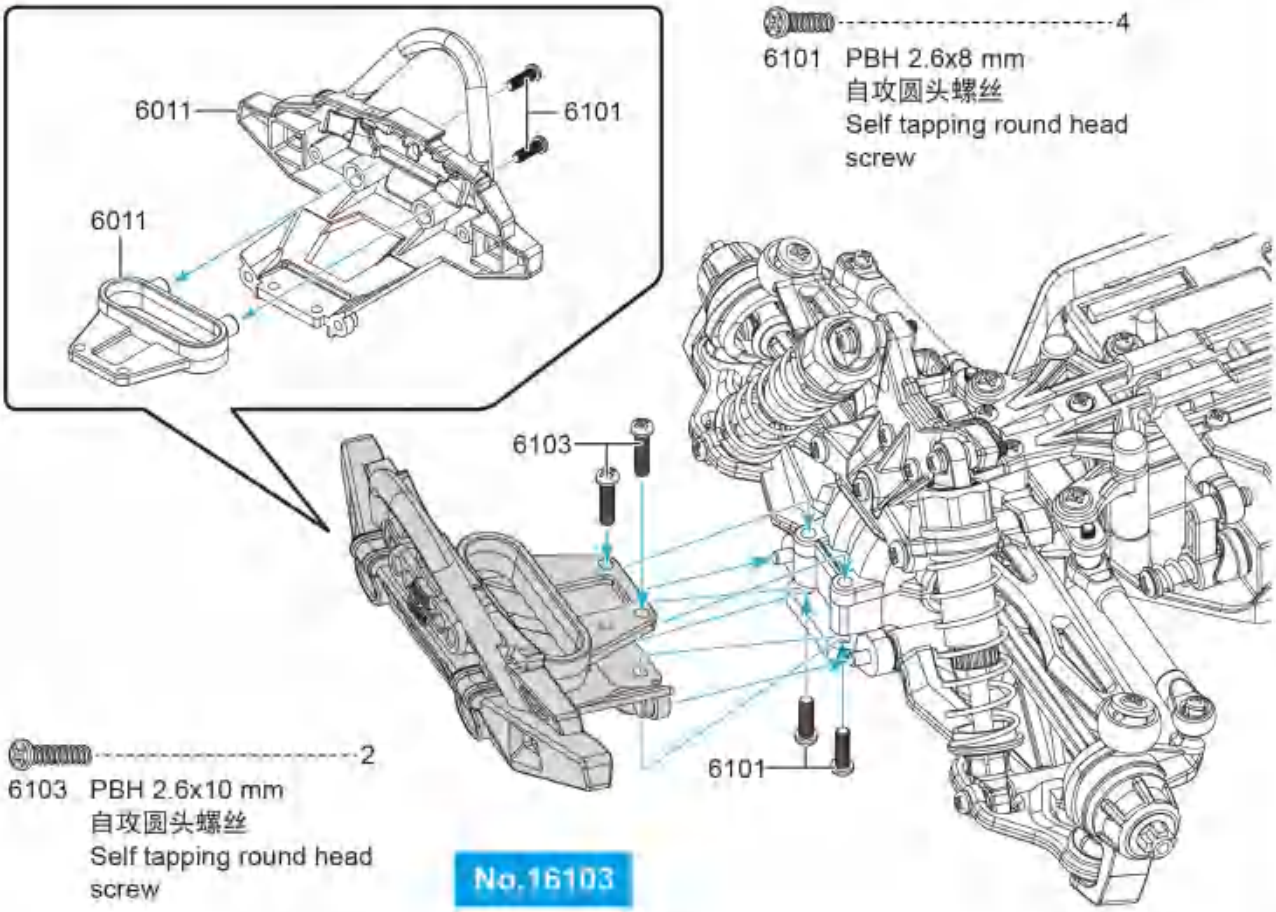

4
6101 PBH 2.6x8 mm
自攻圆头螺丝
Self tapping round head screw

2
6103 PBH 2.6x10 mm
自攻圆头螺丝
Self tapping round head screw

No.16103

23 前防撞组件的装配 Front bumper assembly installation

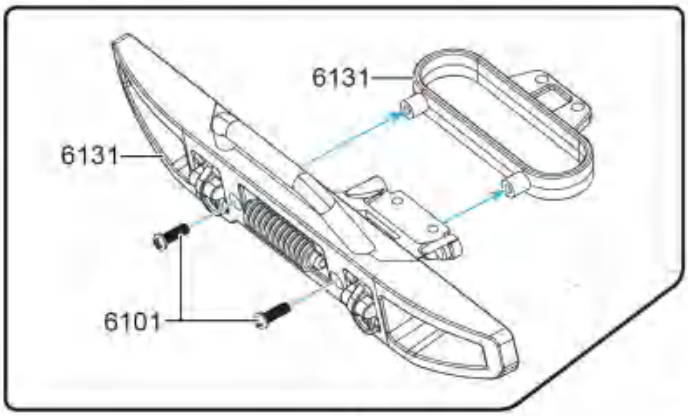

4
6101 PBH 2.6x8 mm
自攻圆头螺丝
Self tapping round head screw

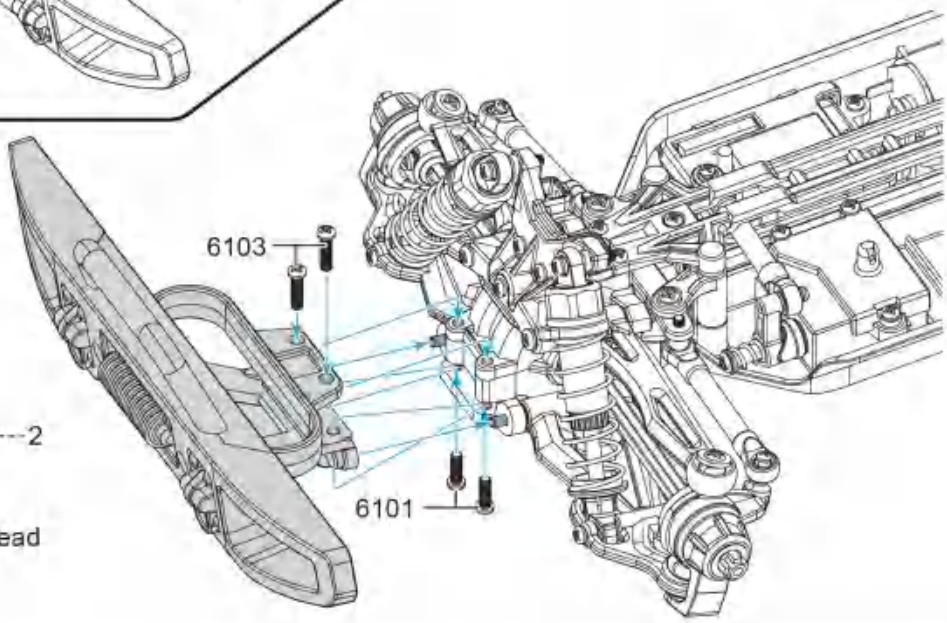

No.16104

2
6103 PBH 2.6x10 mm
自攻圆头螺丝
Self tapping round head screw

24 前防撞组件的装配 Front bumper assembly installation

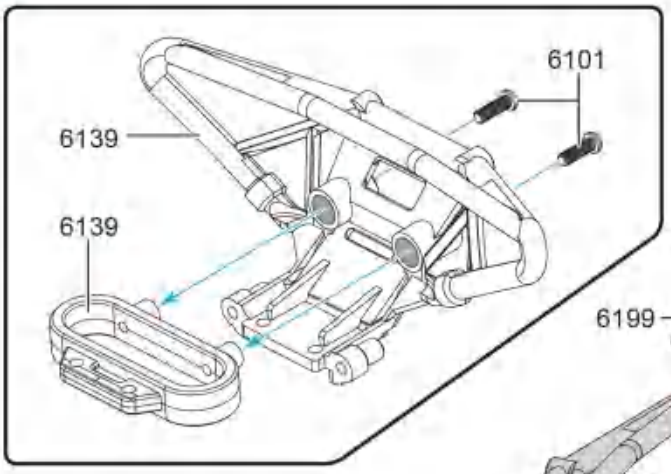

4
6101 PBH 2.6x8 mm
自攻圆头螺丝
Self tapping round head screw

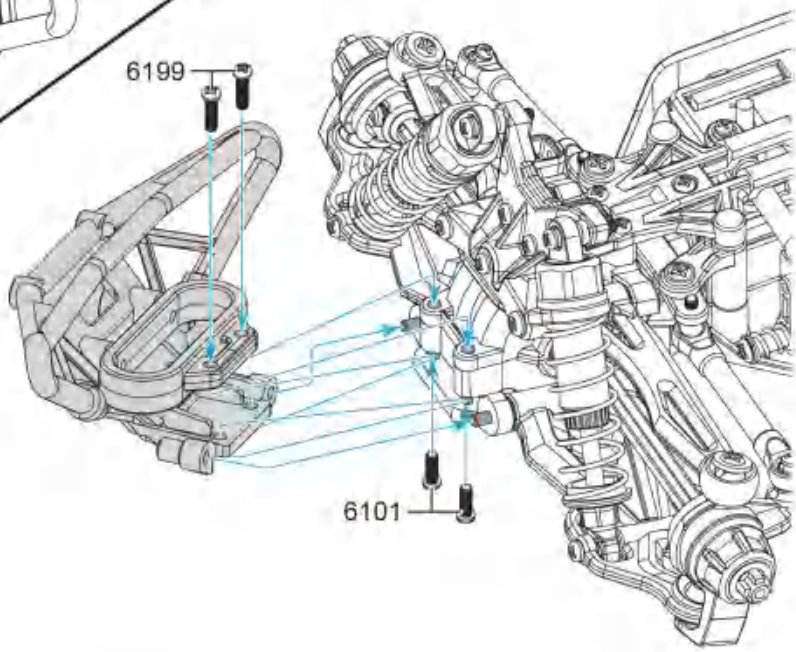

No.16106

2
6199 PBH 2.6x12 mm
自攻圆头螺丝
Self tapping round head screw

25 前减震支架的装配 Front shock tower installation

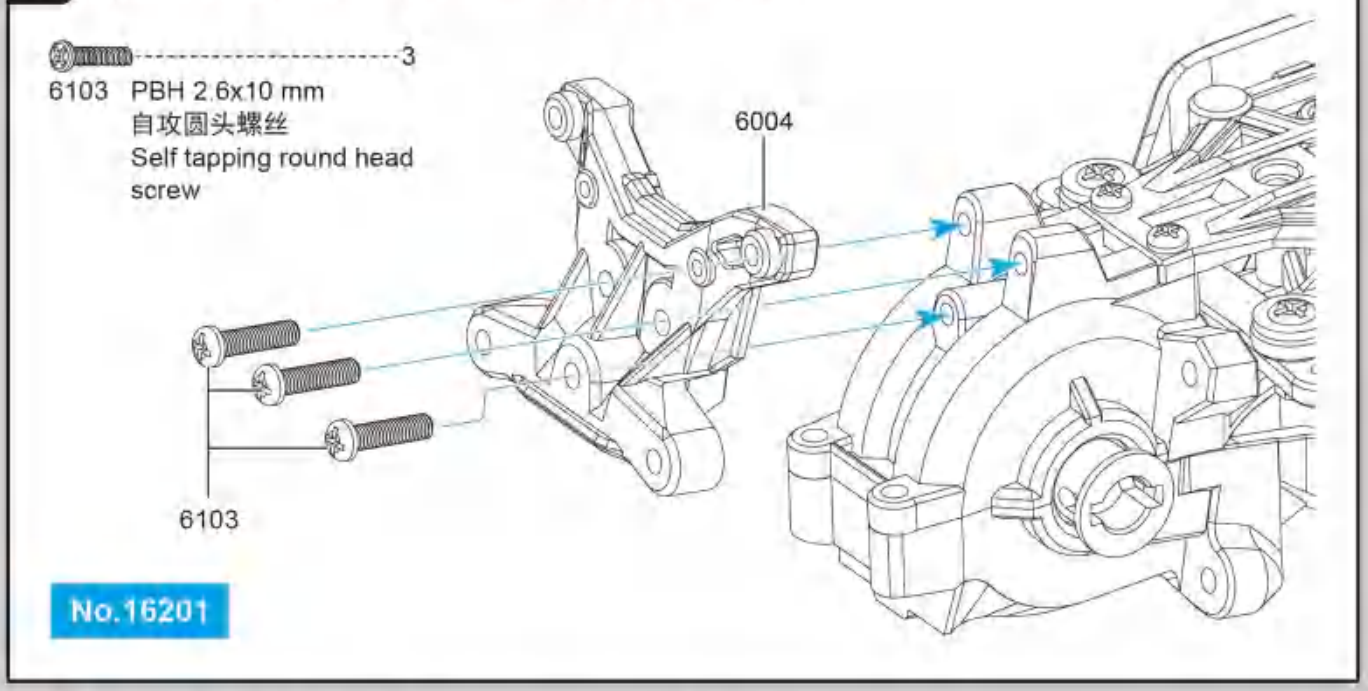

26 前车悬挂的装配1 Front suspension assembly 1

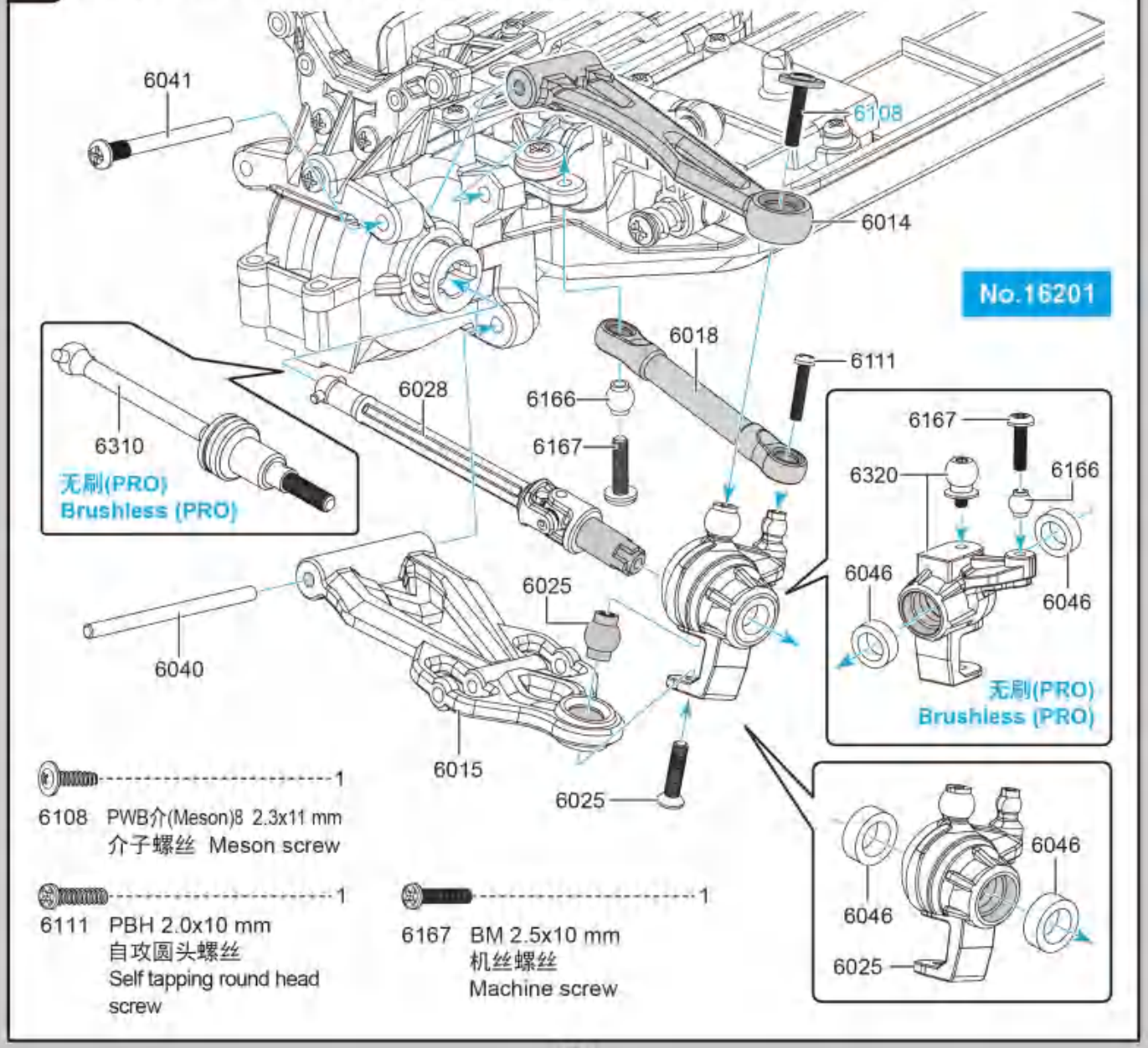

26 前车悬挂的装配2 Front suspension assembly 2

No.16201

6167 BM 2.5x10 mm
机丝螺丝
Machine screw ---------- 1

6108 PWB介(Meson)8 2.3x11 mm
介子螺丝 Meson screw ---------- 1

6111 PBH 2.0x10 mm
自攻圆头螺丝
Self tapping round head screw ---------- 1

27 安装前减震器 Front suspension assembly

No.16201

6105 BM 2.5x14 mm
机丝圆头螺丝
Machine round head screw ---------- 4

28 前防撞组件的装配 Front bumper assembly installation

No.16201

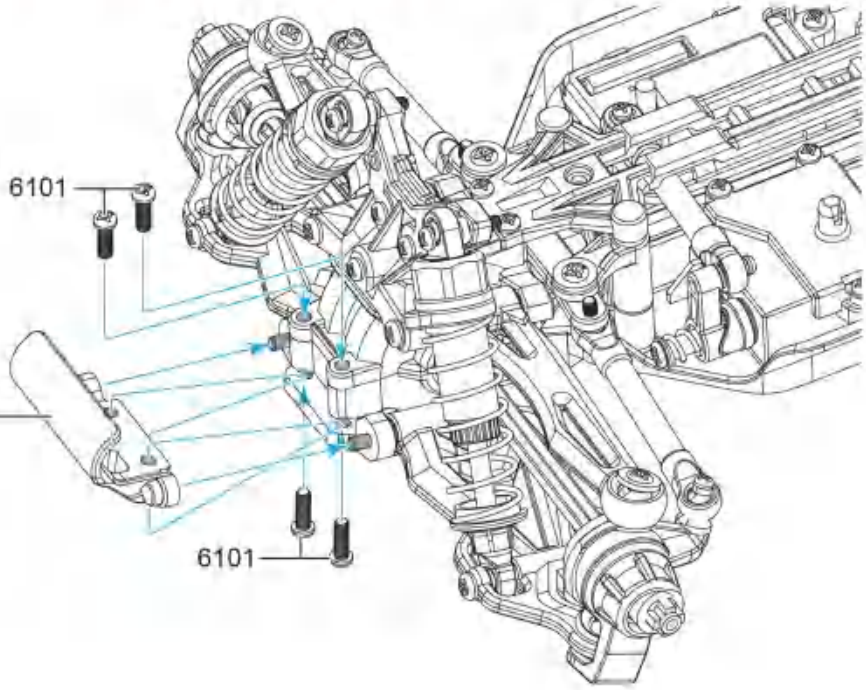

4

6101 PBH 2.6x8 mm
自攻圆头螺丝
Self tapping round head screw

29 后车悬挂的装配1 Rear suspension assembly 1

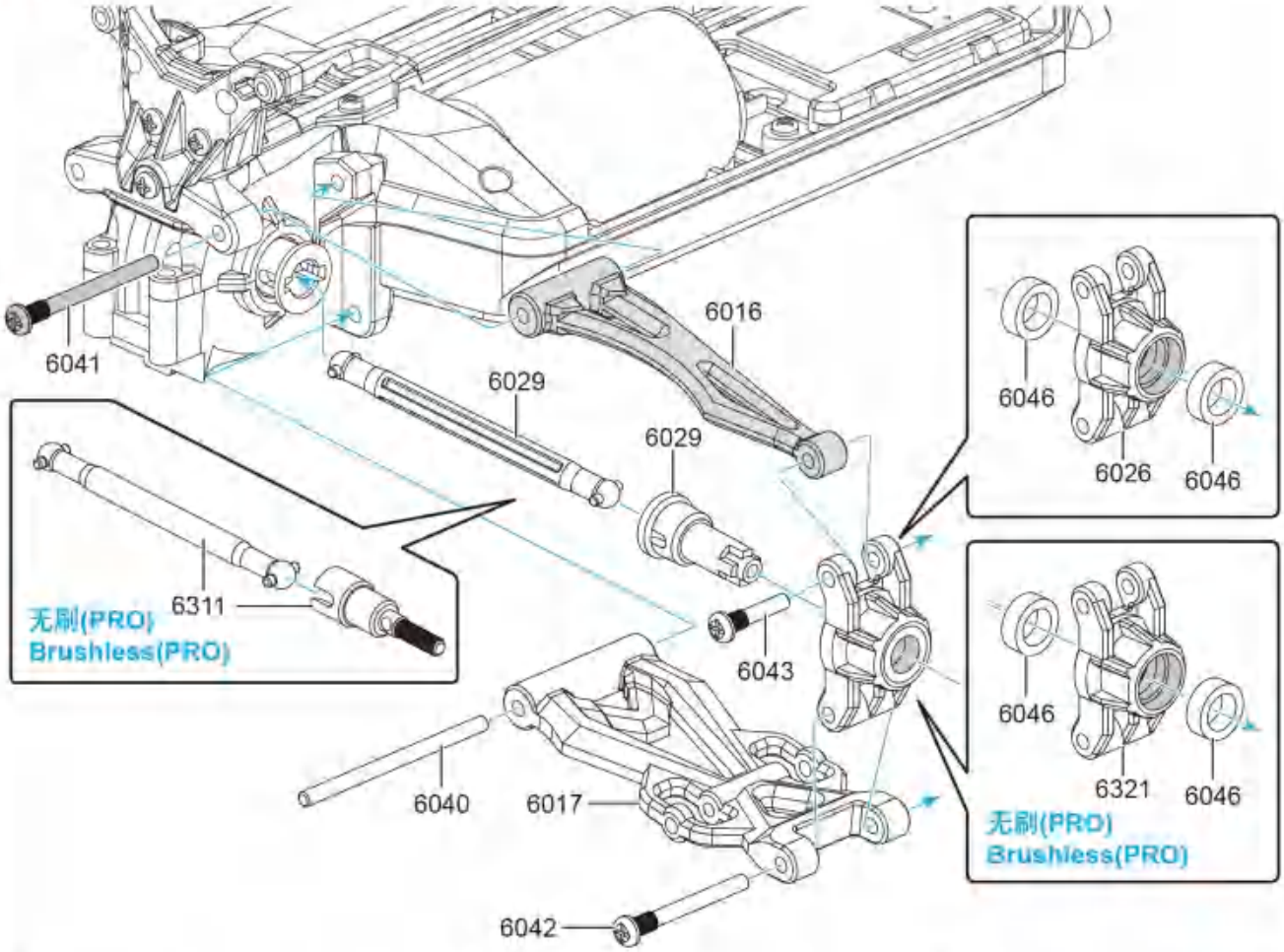

1

6041 PBH 2.5x29.5 mm
半牙螺丝
Half thread screw

1

6042 PBH 2.5x25.5 mm
半牙螺丝
Half thread screw

1

6043 PBH 2.5x14 mm
自攻台阶圆头螺丝
Self tapping step round head screw

29 后车悬挂的装配2 Rear suspension assembly 2

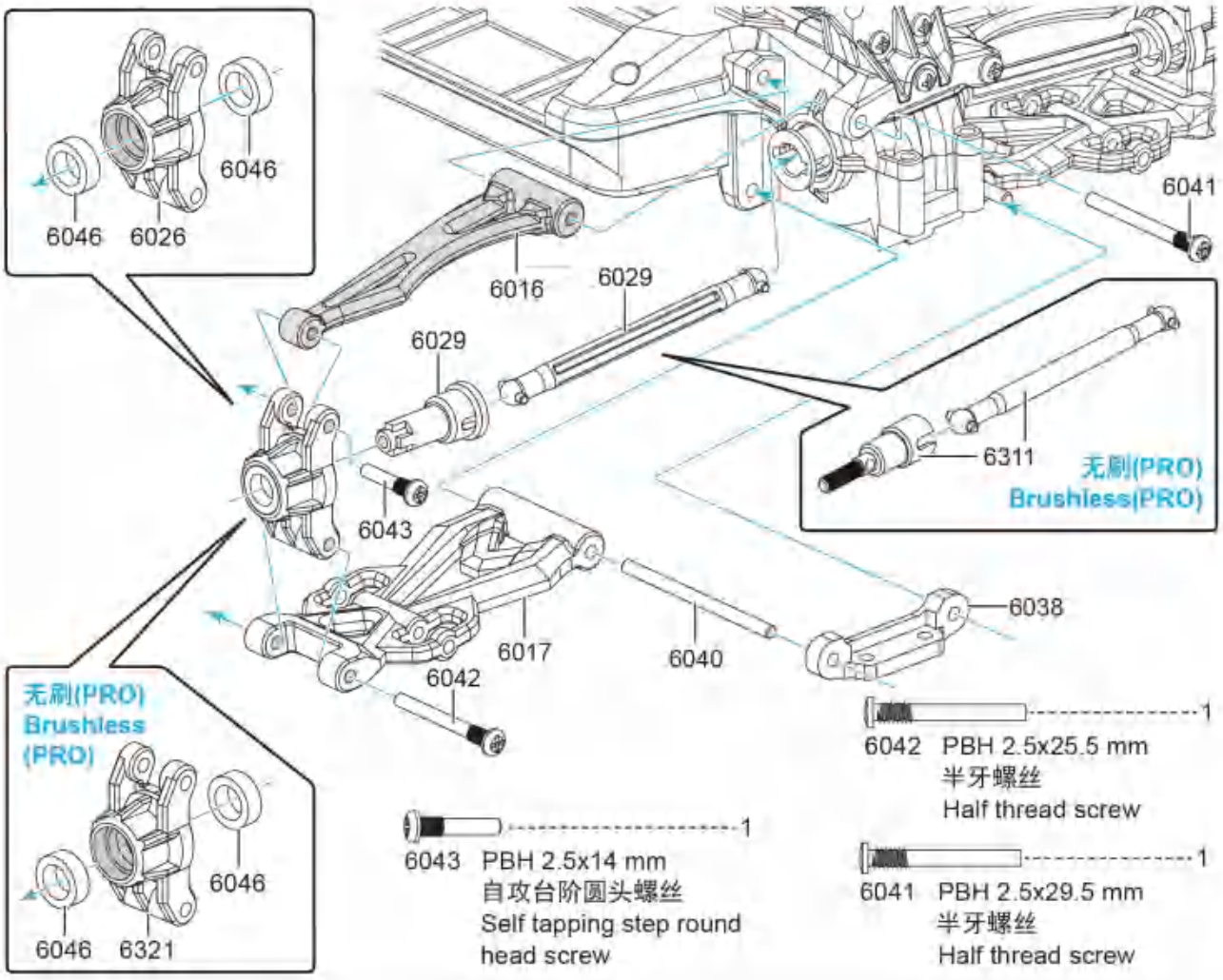

6042 PBH 2.5x25.5 mm ---------- 1
半牙螺丝
Half thread screw

6043 PBH 2.5x14 mm ---------- 1
自攻台阶圆头螺丝
Self tapping step round head screw

6041 PBH 2.5x29.5 mm ---------- 1
半牙螺丝
Half thread screw

30 后防撞组件 Rear anti-collision assembly

6101 PBH 2.6x8 mm ---------- 4
自攻圆头螺丝
Self tapping round head screw

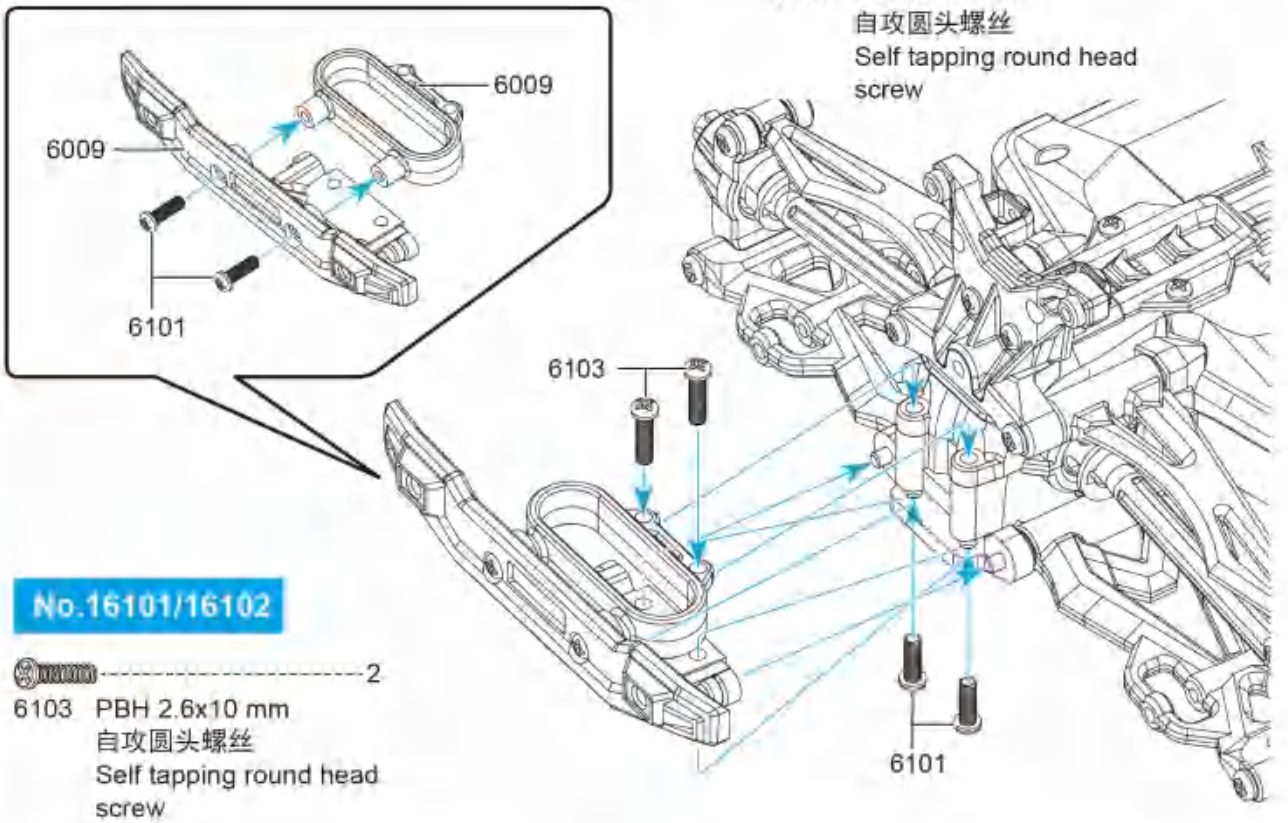

No.16101/16102

6103 PBH 2.6x10 mm ---------- 2
自攻圆头螺丝
Self tapping round head screw

31 安装后减震器 Rear shock assembly

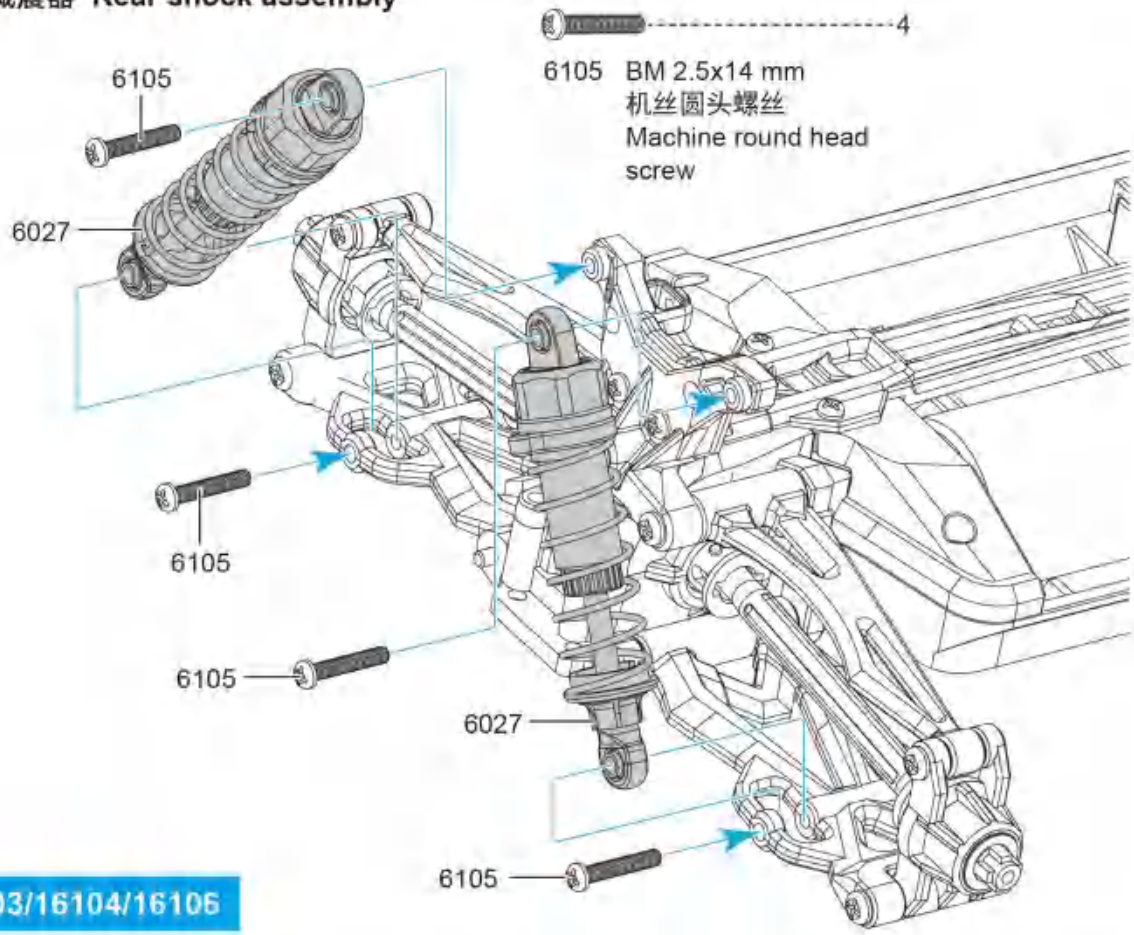

No.16103/16104/16106

32 后防撞组件 Rear anti-collision assembly

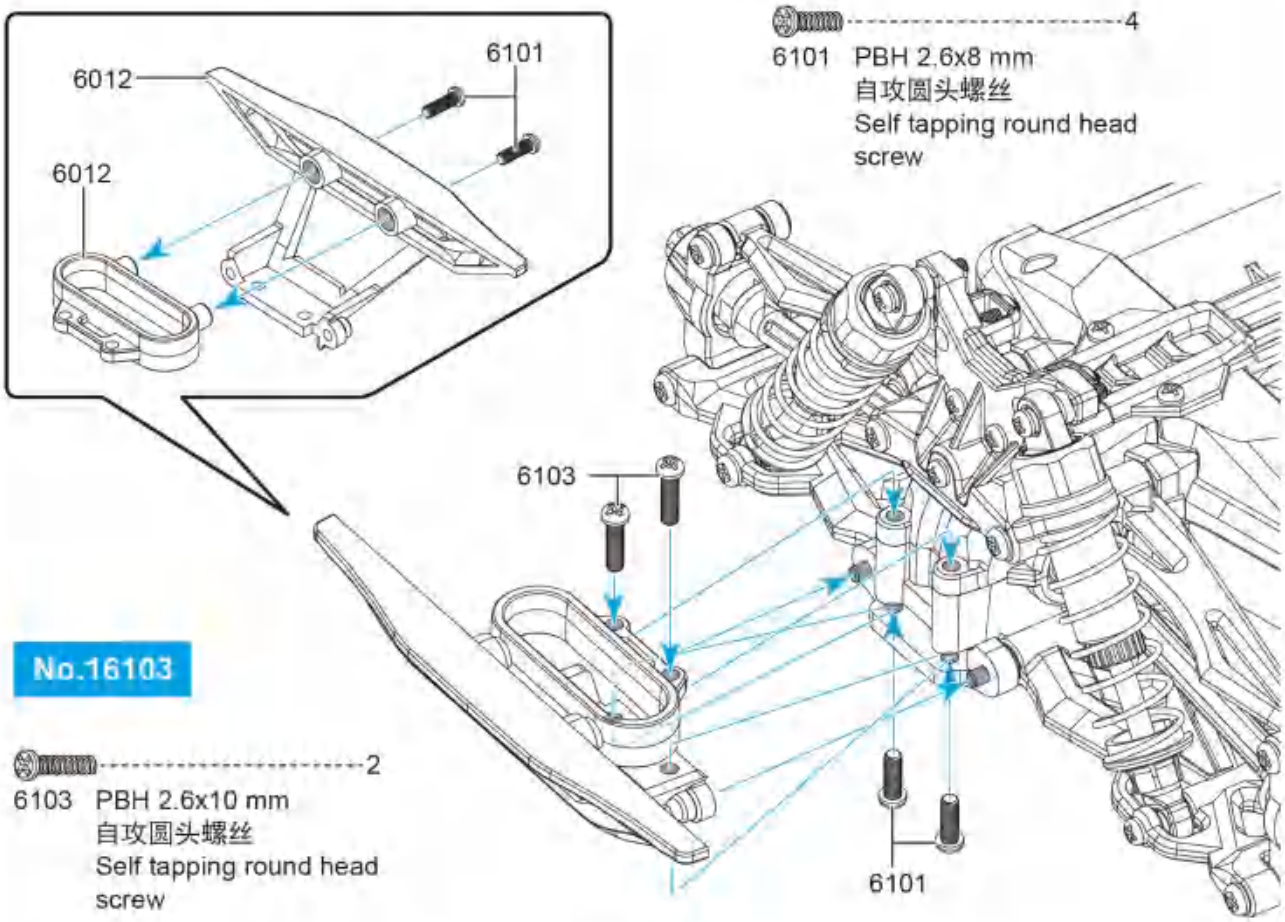

No.16103

33 后防撞组件 Rear anti-collision assembly

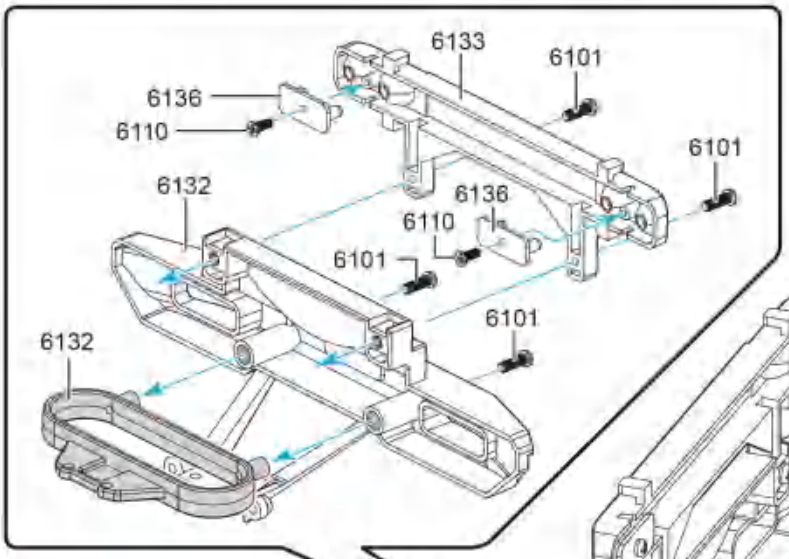

6 — 6101 PBH 2.6x8 mm
自攻圆头螺丝
Self tapping round head screw

2 — 6110 KBH 2.3x7 mm
自攻沉头螺丝
Self tapping countersunk head screw

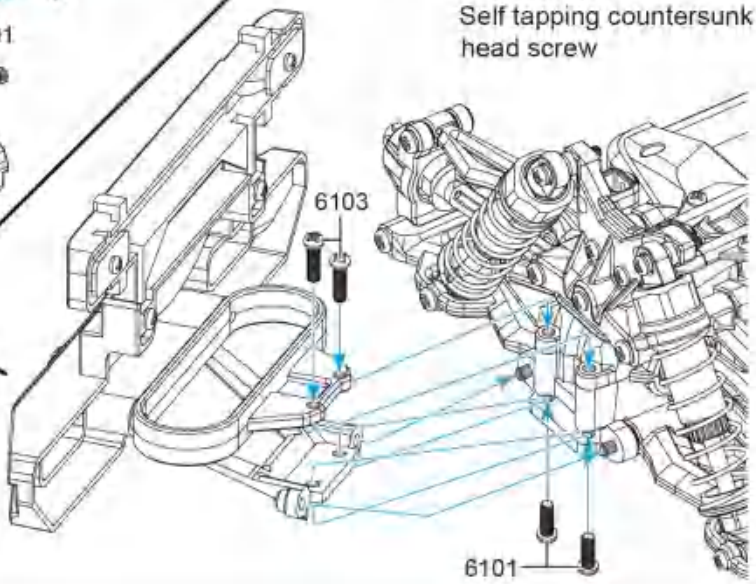

No.16104

2 — 6103 PBH 2.6x10 mm
自攻圆头螺丝
Self tapping round head screw

34 后防撞组件 Rear anti-collision assembly

No.16106

4 — 6101 PBH 2.6x8 mm
自攻圆头螺丝
Self tapping round head screw

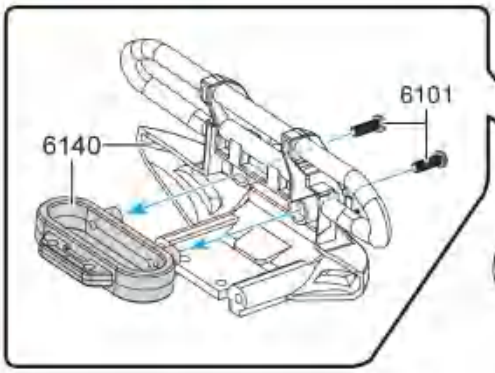

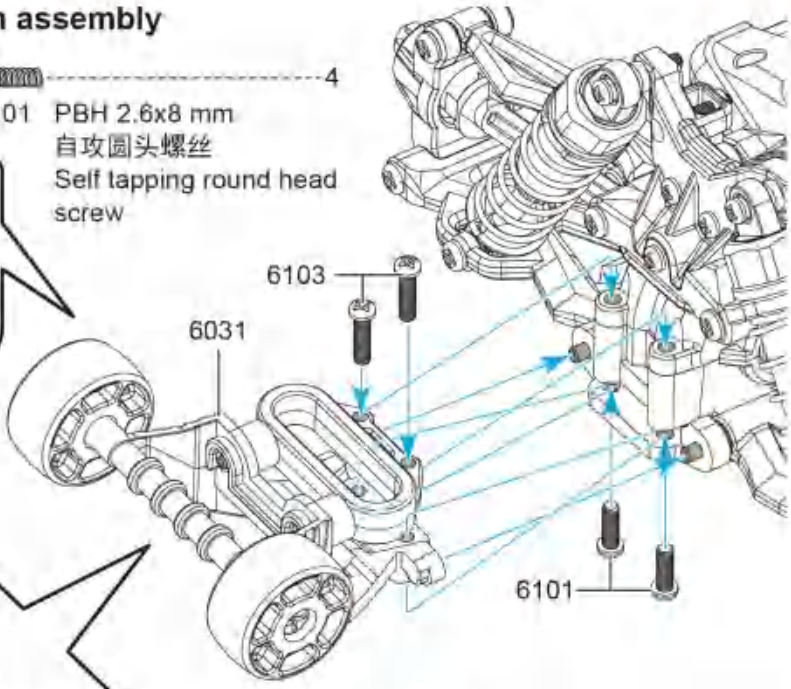

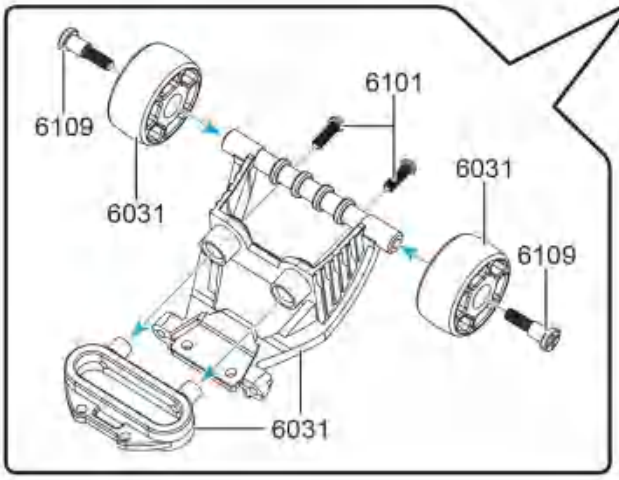

2 — 6109 3x4x13x6.2mm
自攻台阶螺丝
Self tapping step screw

2 — 6103 PBH 2.6x10 mm
自攻圆头螺丝
Self tapping round head screw

35 后防撞组件 Rear anti-collision assembly

No.16201

4

6101 PBH 2.6x8 mm
自攻圆头螺丝
Self tapping round head screw

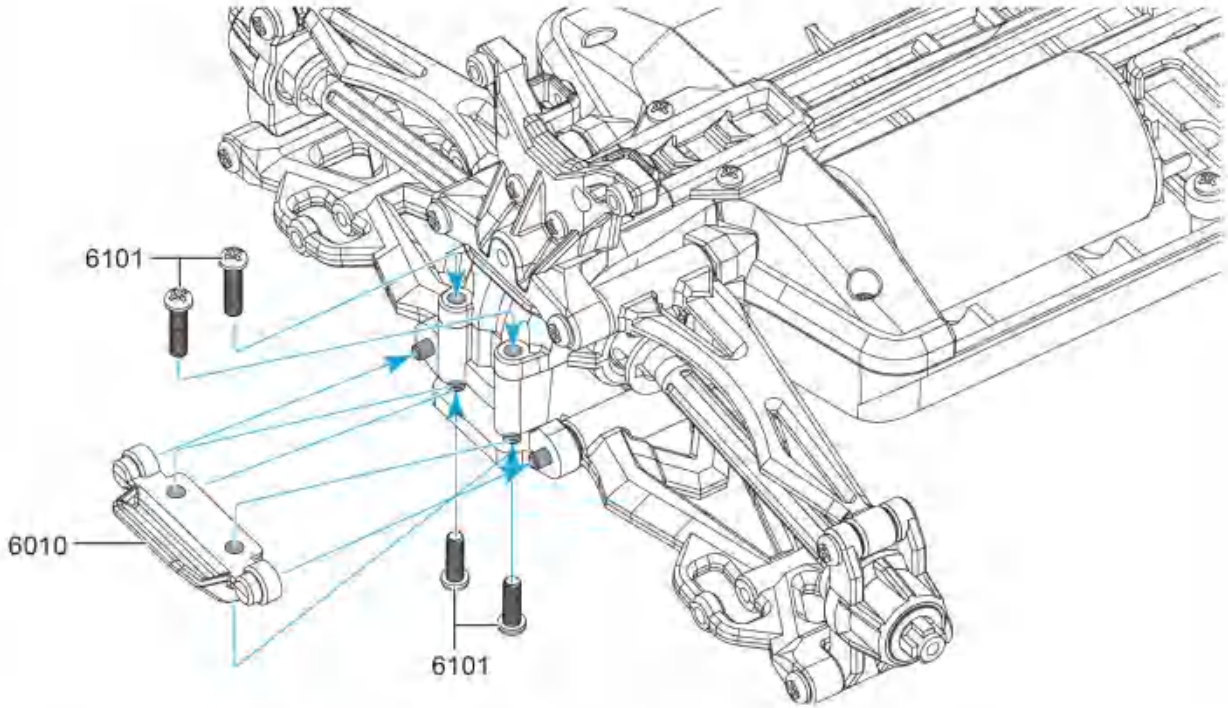

36 安装后车壳支柱 Install the rear car shell strut

No.16101/16102

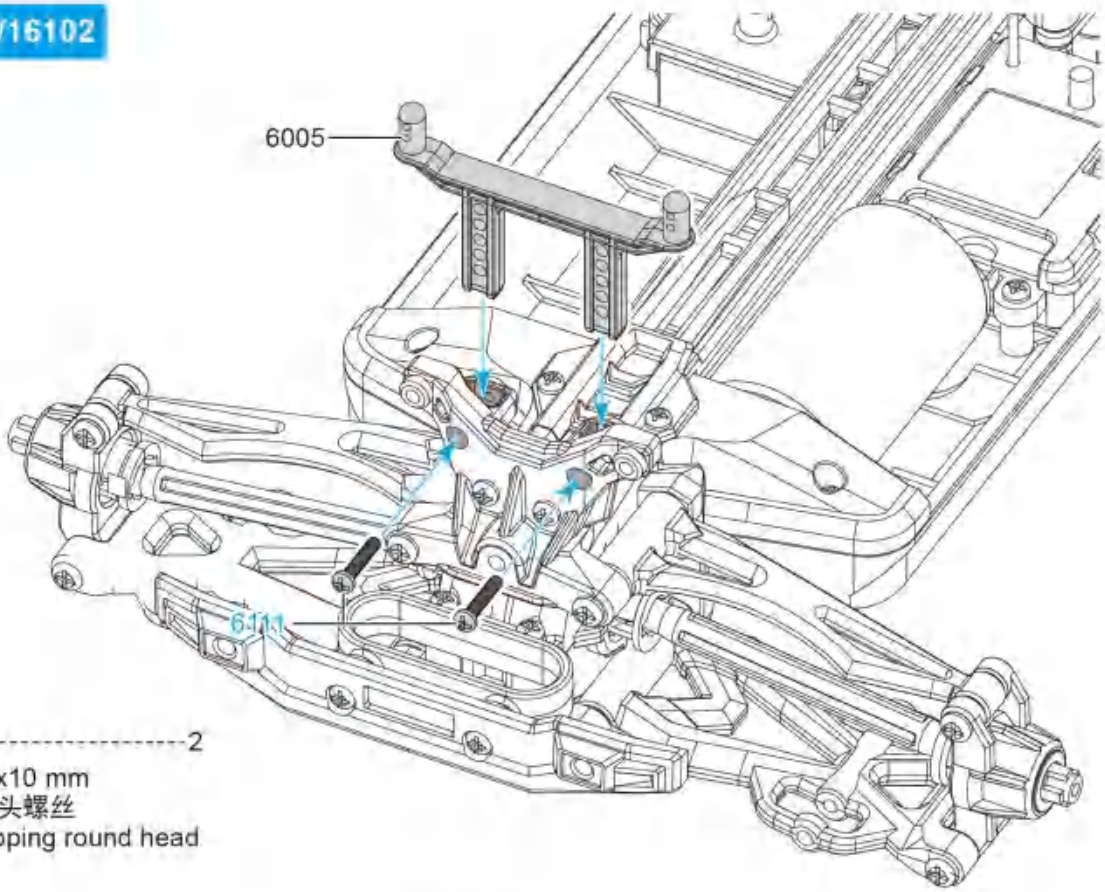

2

6111 PBH 2x10 mm
自攻圆头螺丝
Self tapping round head screw

37 后防撞组件 Rear anti-collision assembly

No.16201

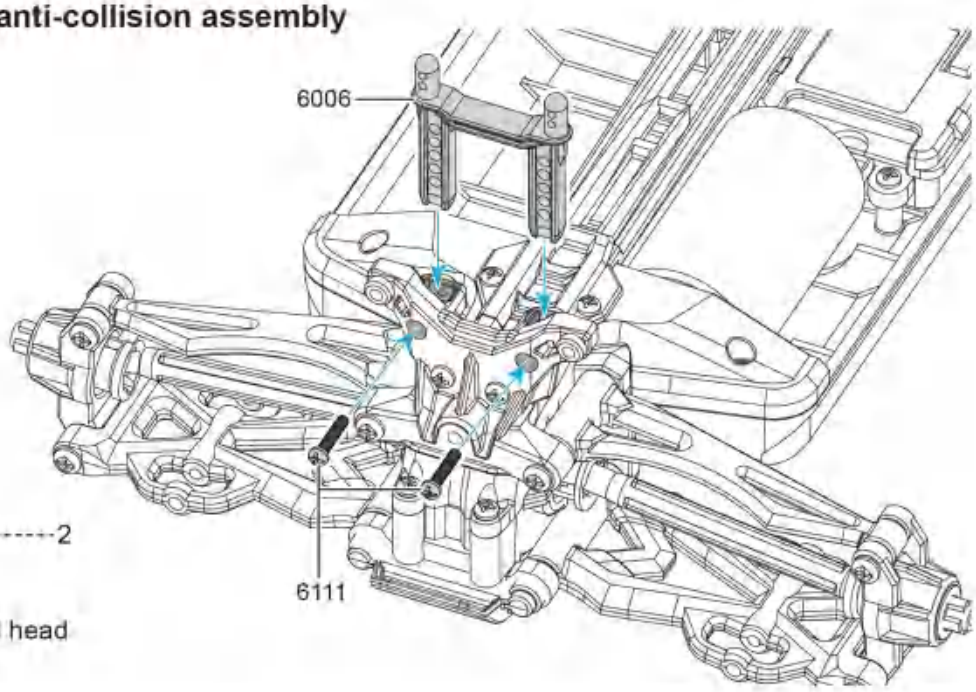

2

6111 PBH 2x10 mm
自攻圆头螺丝
Self tapping round head screw

38 安装后减震器 Rear shock assembly

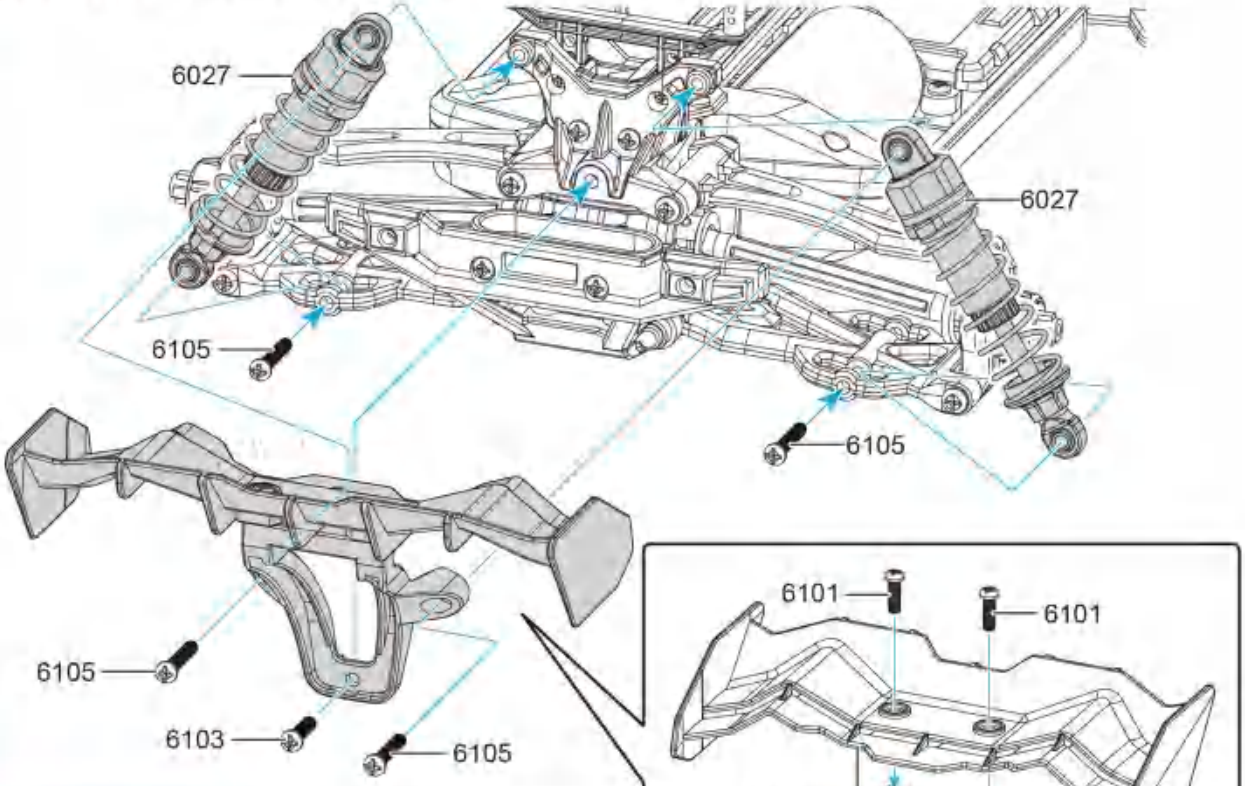

No.16101/16102

1

6103 PBH 2.6x10 mm
自攻圆头螺丝
Self tapping round head screw

4

6105 BM 2.5x14 mm
机丝圆头螺丝
Machine round head screw

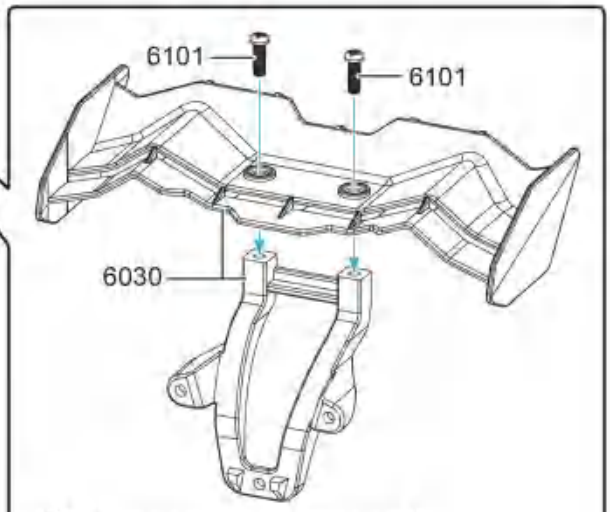

2

6101 PBH 2.6x8 mm
自攻圆头螺丝
Self tapping round head screw

39 安装后减震器 Rear shock assembly

No.16201

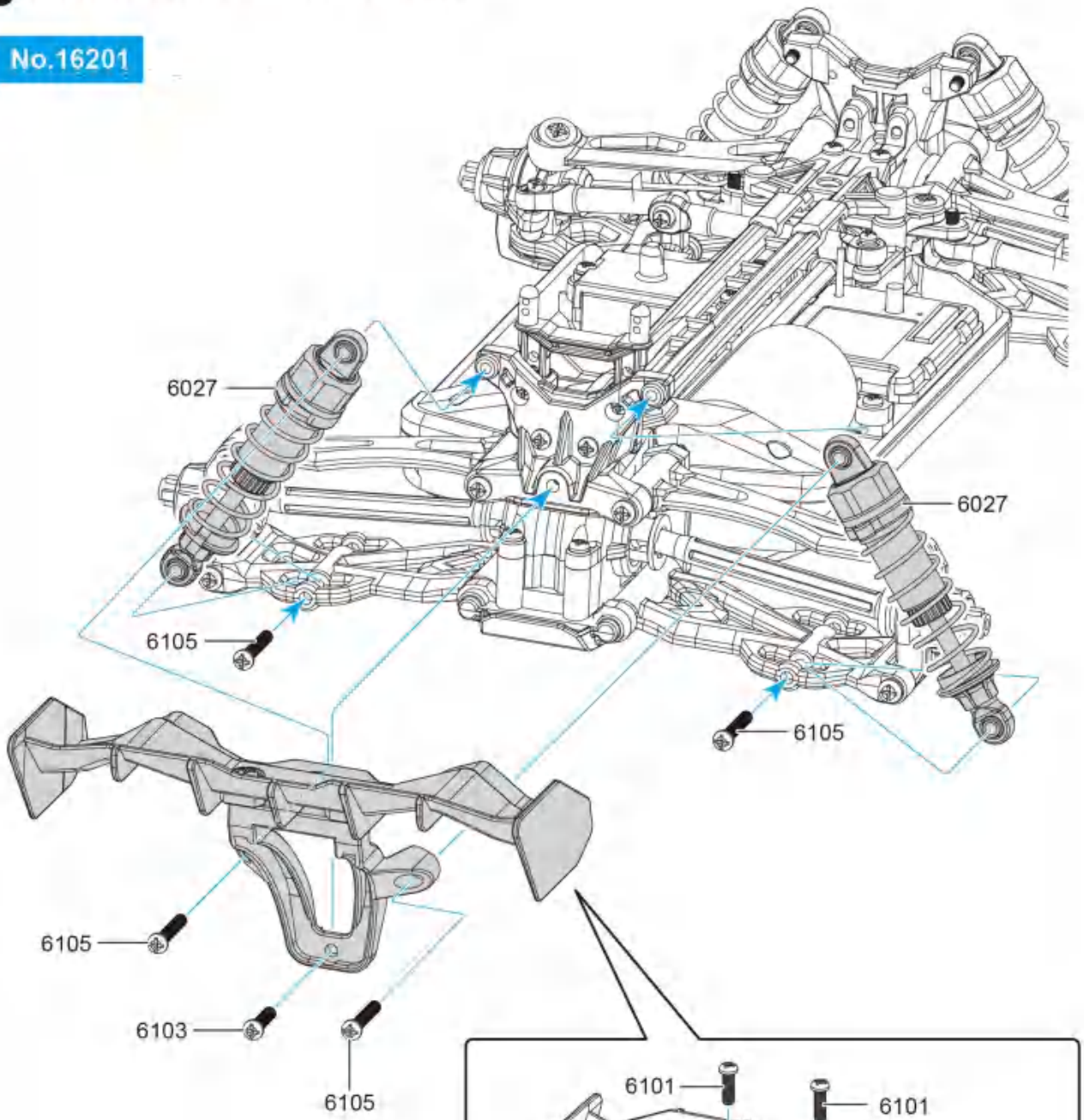

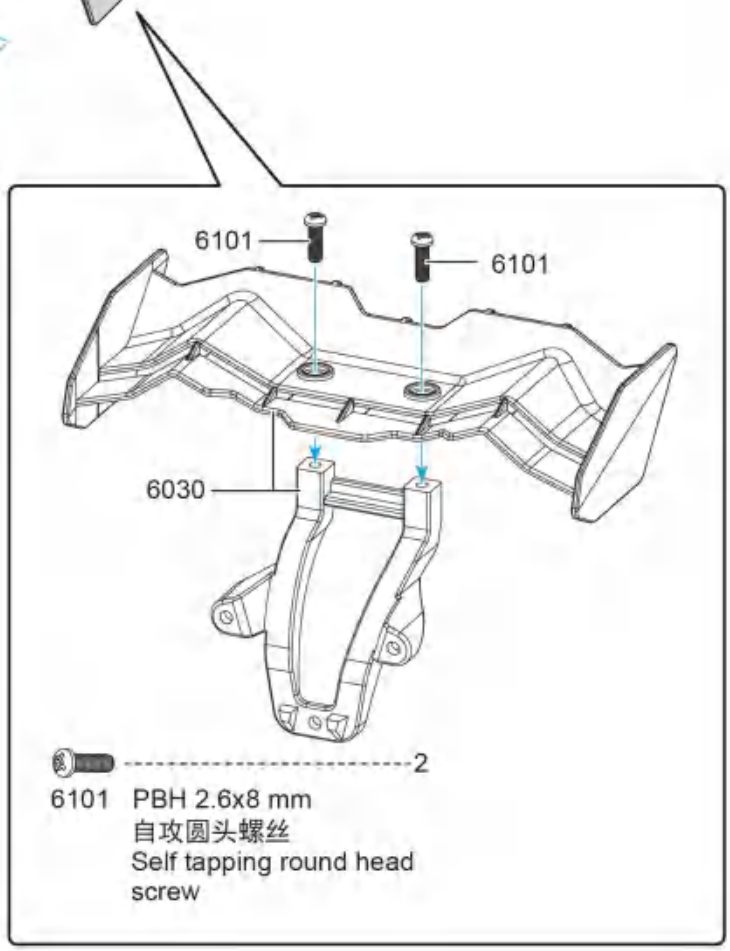

1

6103 PBH 2.6x10 mm
自攻圆头螺丝
Self tapping round head screw

4

6105 BM 2.5x14 mm
机丝圆头螺丝
Machine round head screw

40 安装有刷车轮 Brush wheel installation

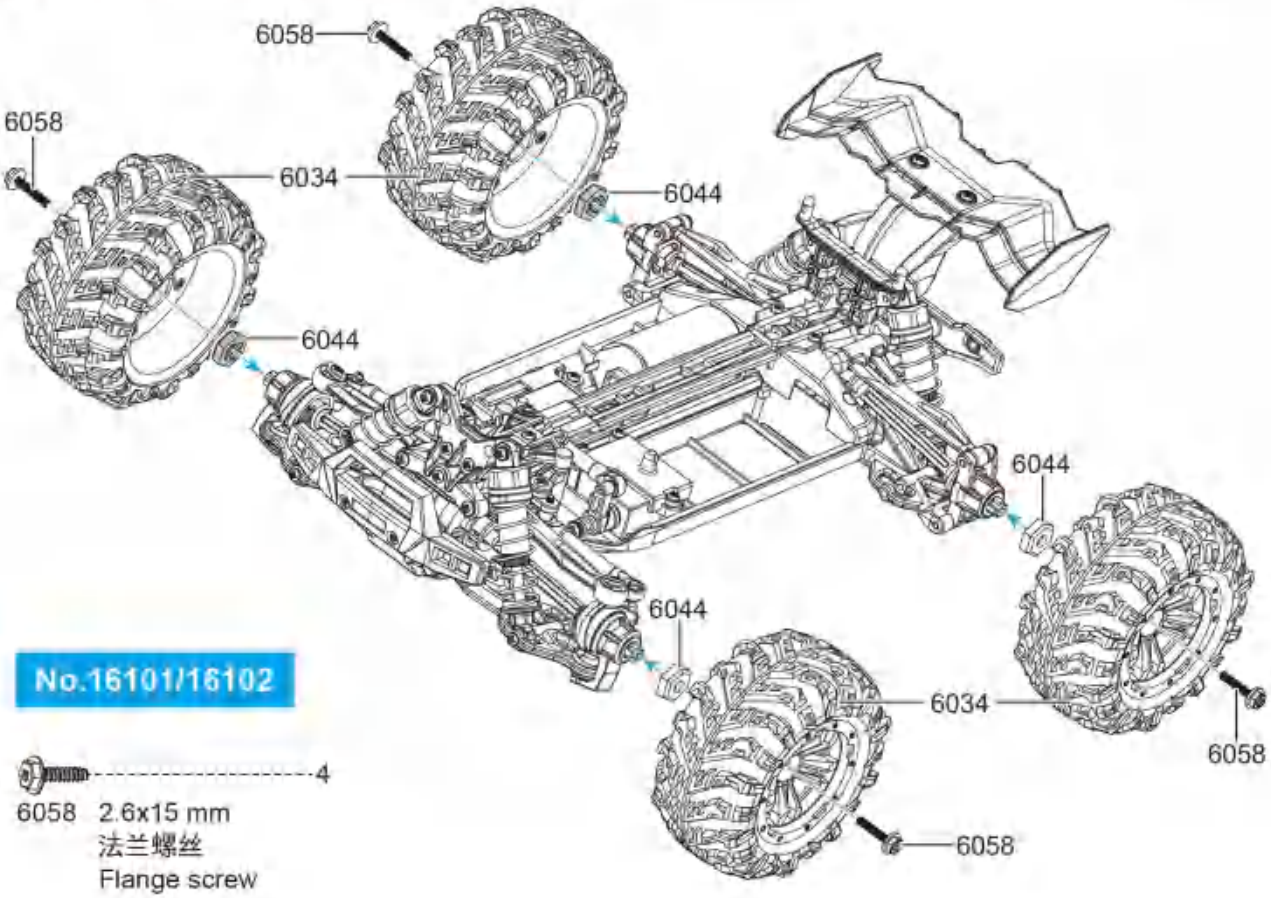

No.16101/16102

4

6058 2.6x15 mm
法兰螺丝
Flange screw

41 安装无刷车轮 Brushless wheel installation

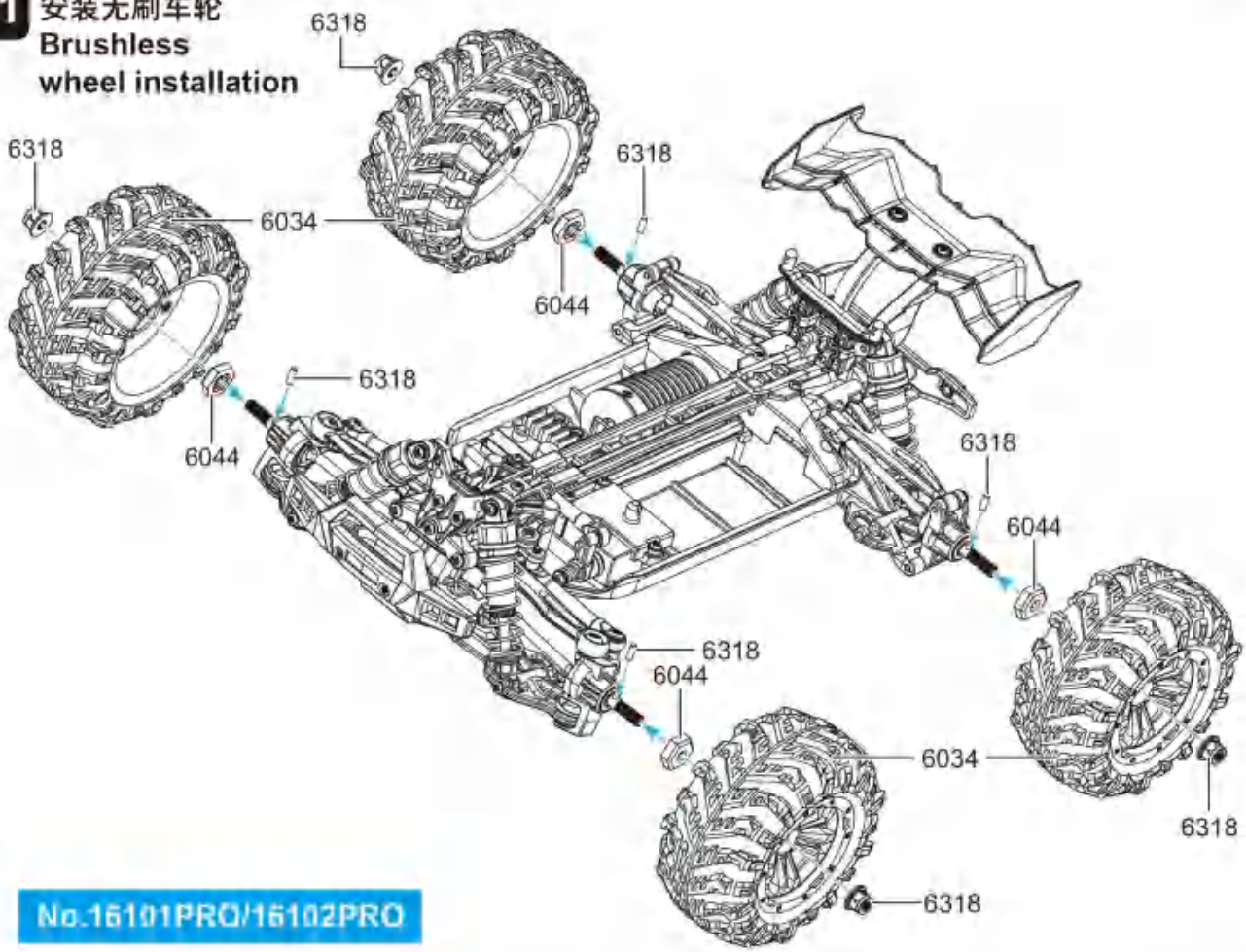

No.16101PRO/16102PRO

42 安装有刷车轮 Brush wheel installation

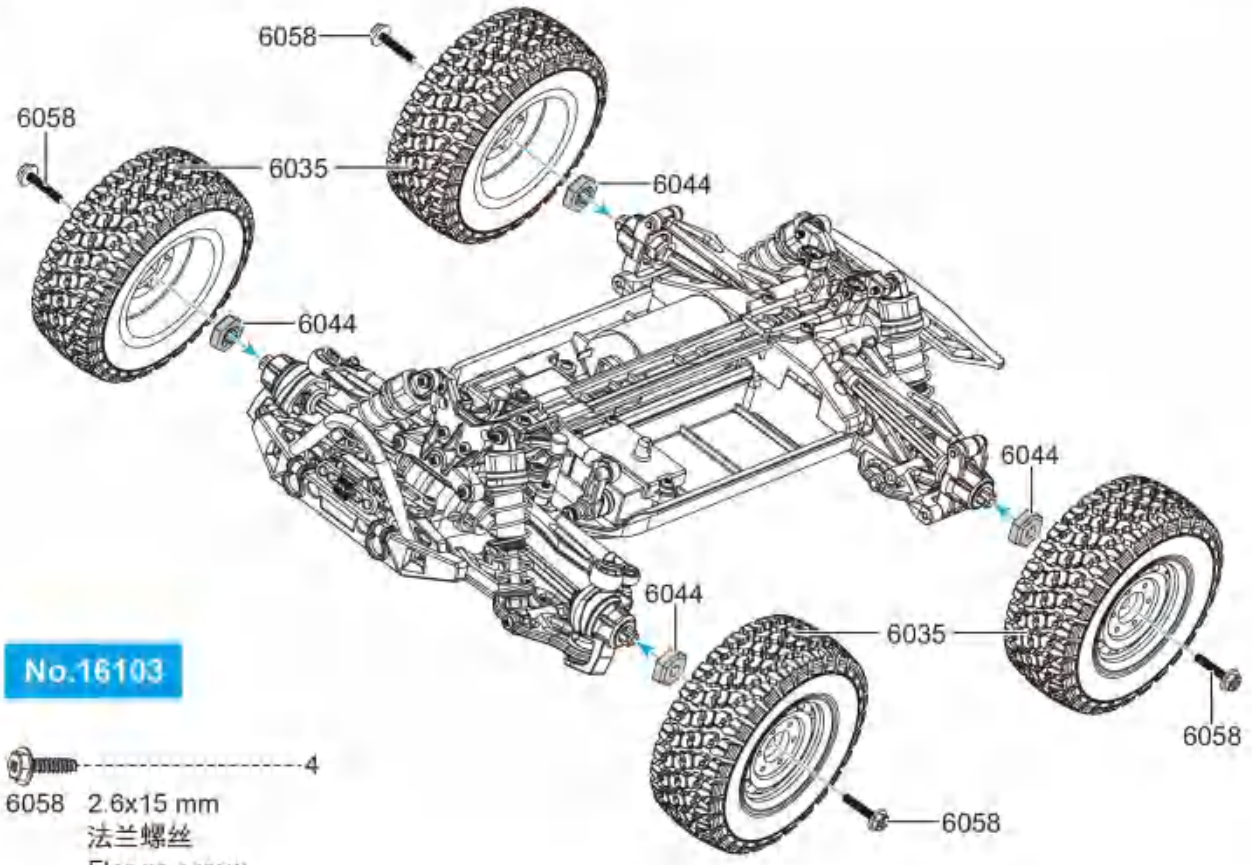

No.16103

4

6058 2.6x15 mm
法兰螺丝
Flange screw

43 安装无刷车轮 Brushless wheel installation

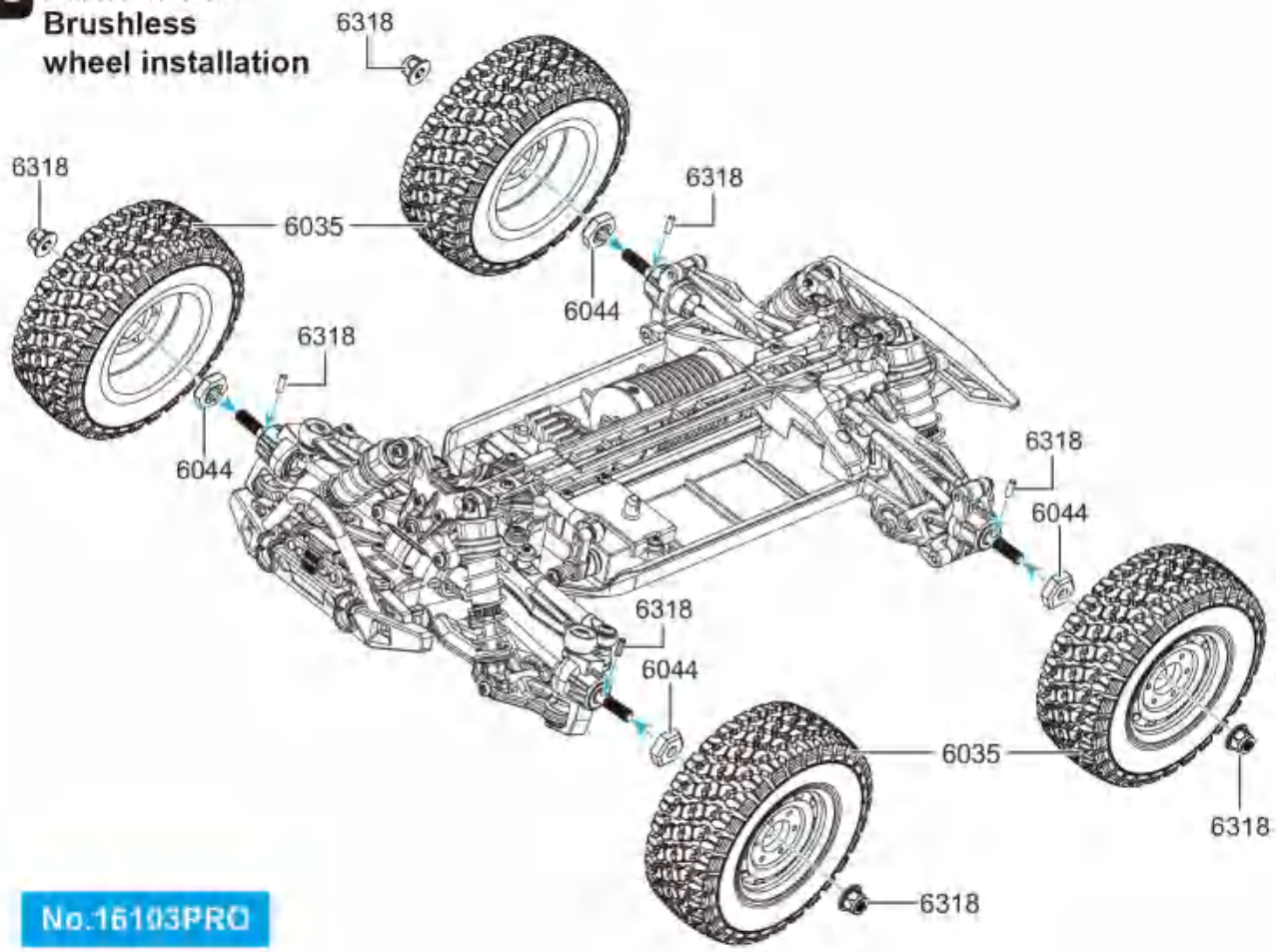

No.16103PRO

44 安装有刷车轮 Brush wheel installation

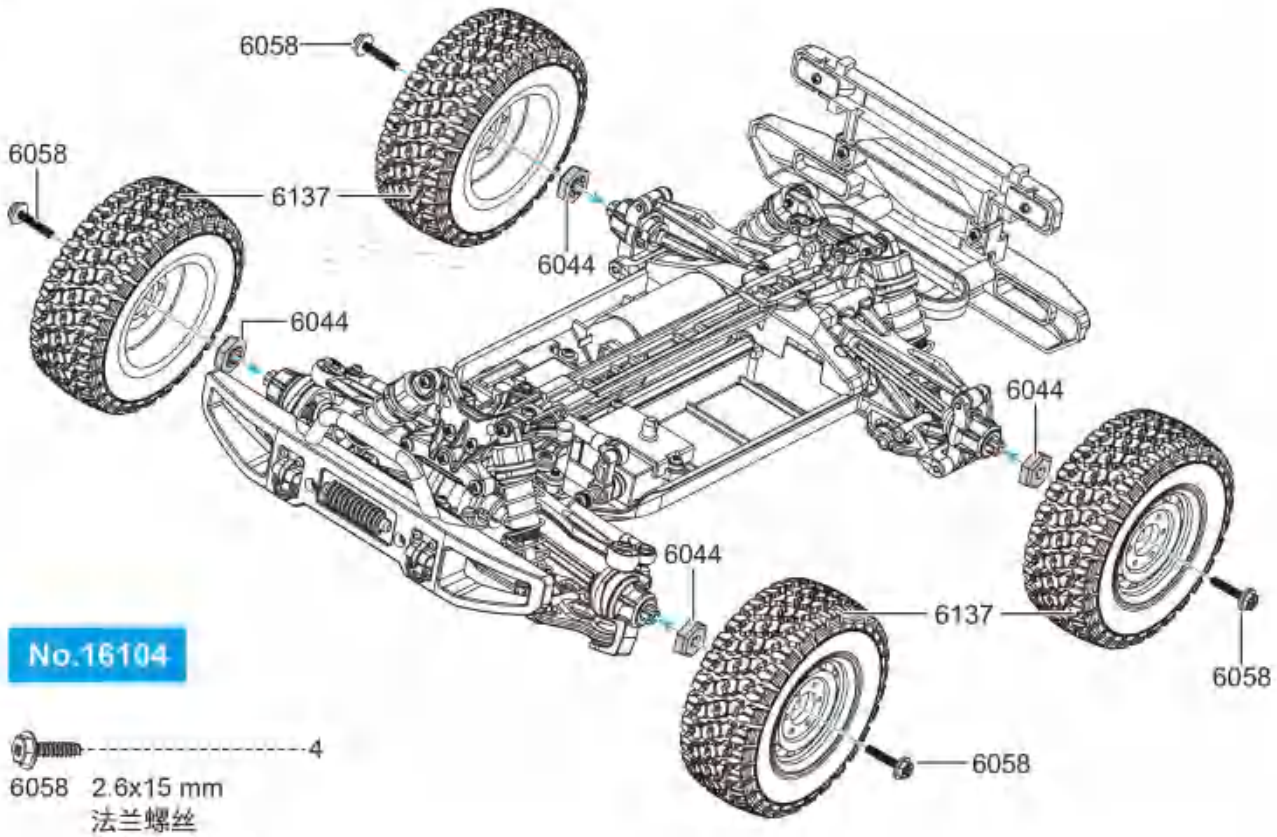

No.16104

4

6058 2.6x15 mm
法兰螺丝
Flange screw

45 安装无刷车轮 Brushless wheel installation

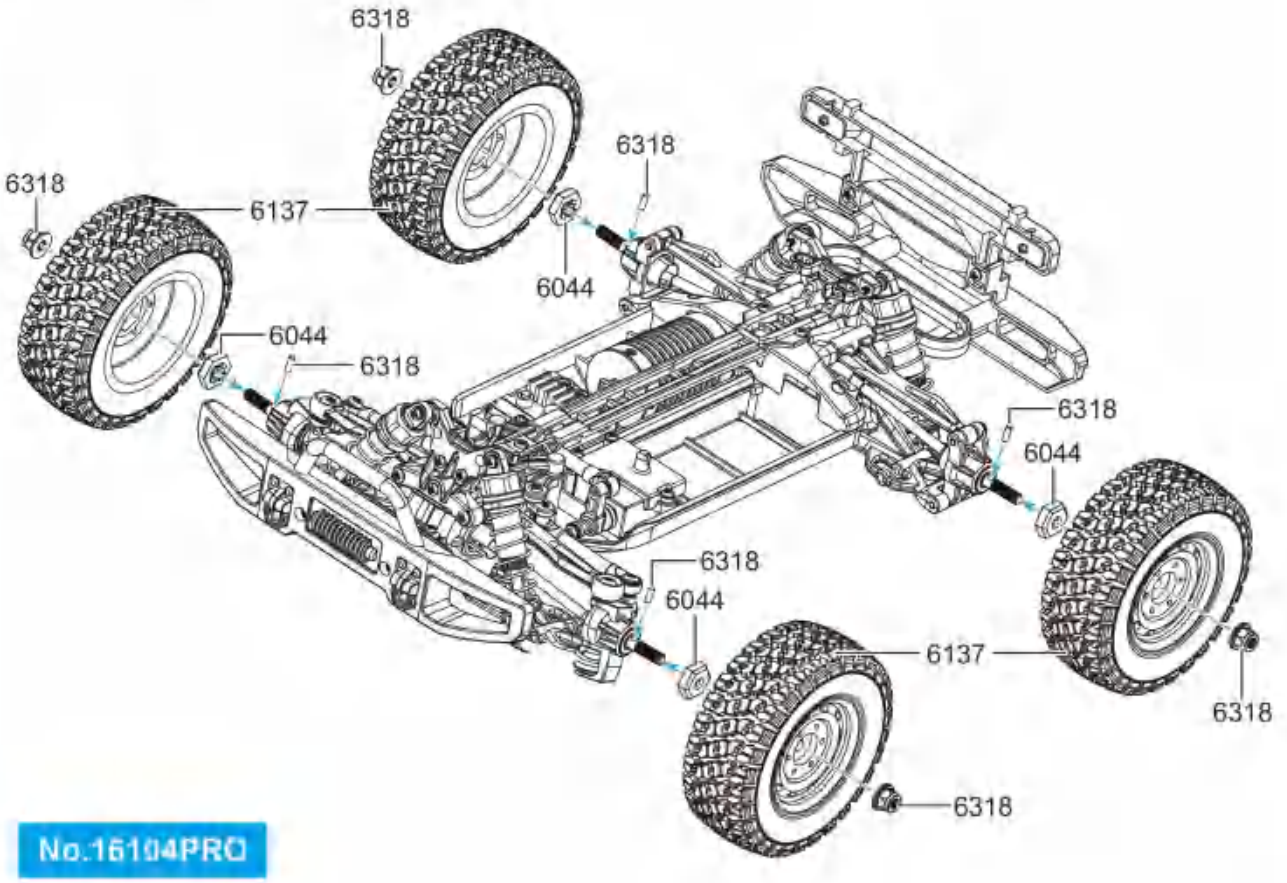

No.16104PRO

46 安装有刷车轮 Brush wheel installation

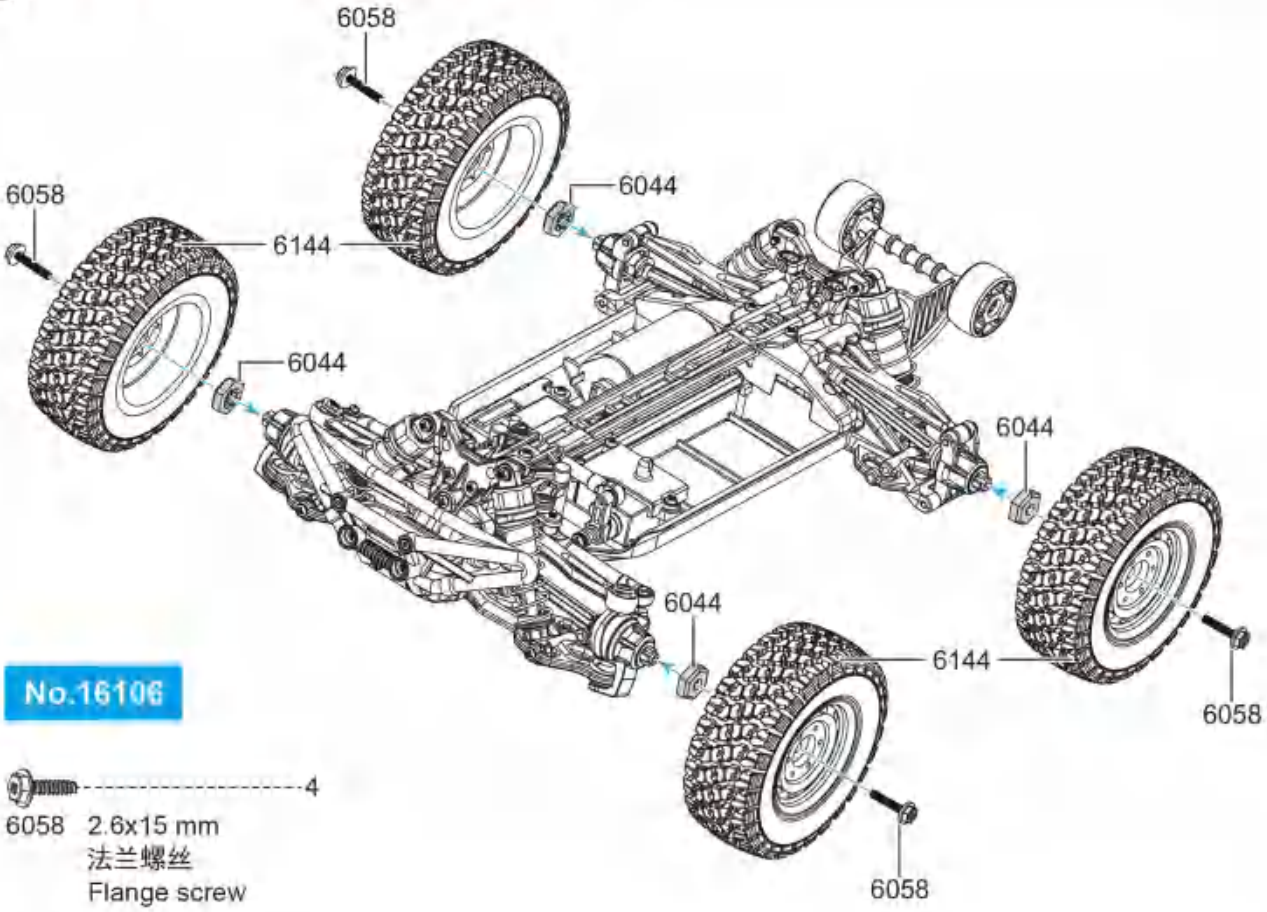

No.16106

4

6058 2.6x15 mm
法兰螺丝
Flange screw

47 安装无刷车轮 Brushless wheel installation

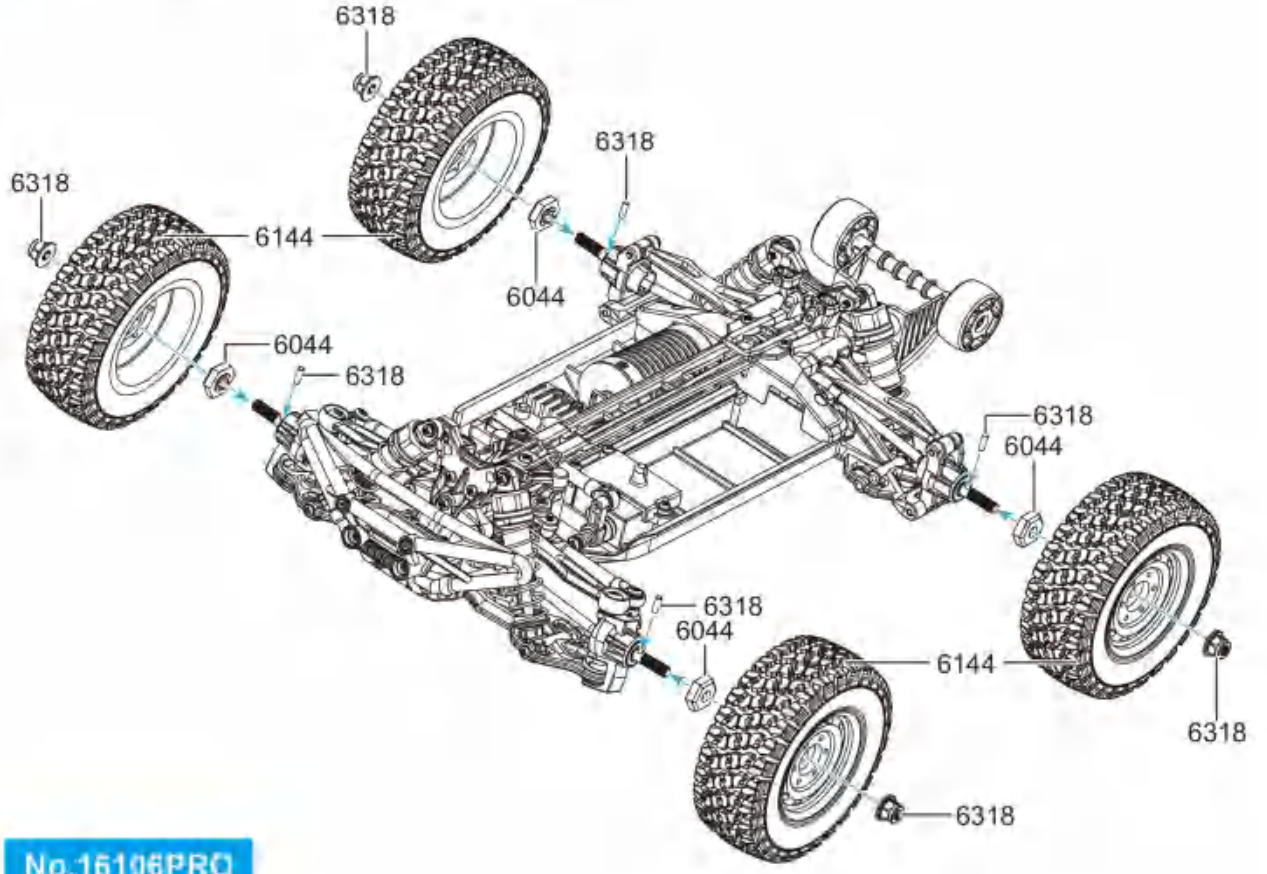

No.16106PRO

48 安装有刷车轮 Brush wheel installation

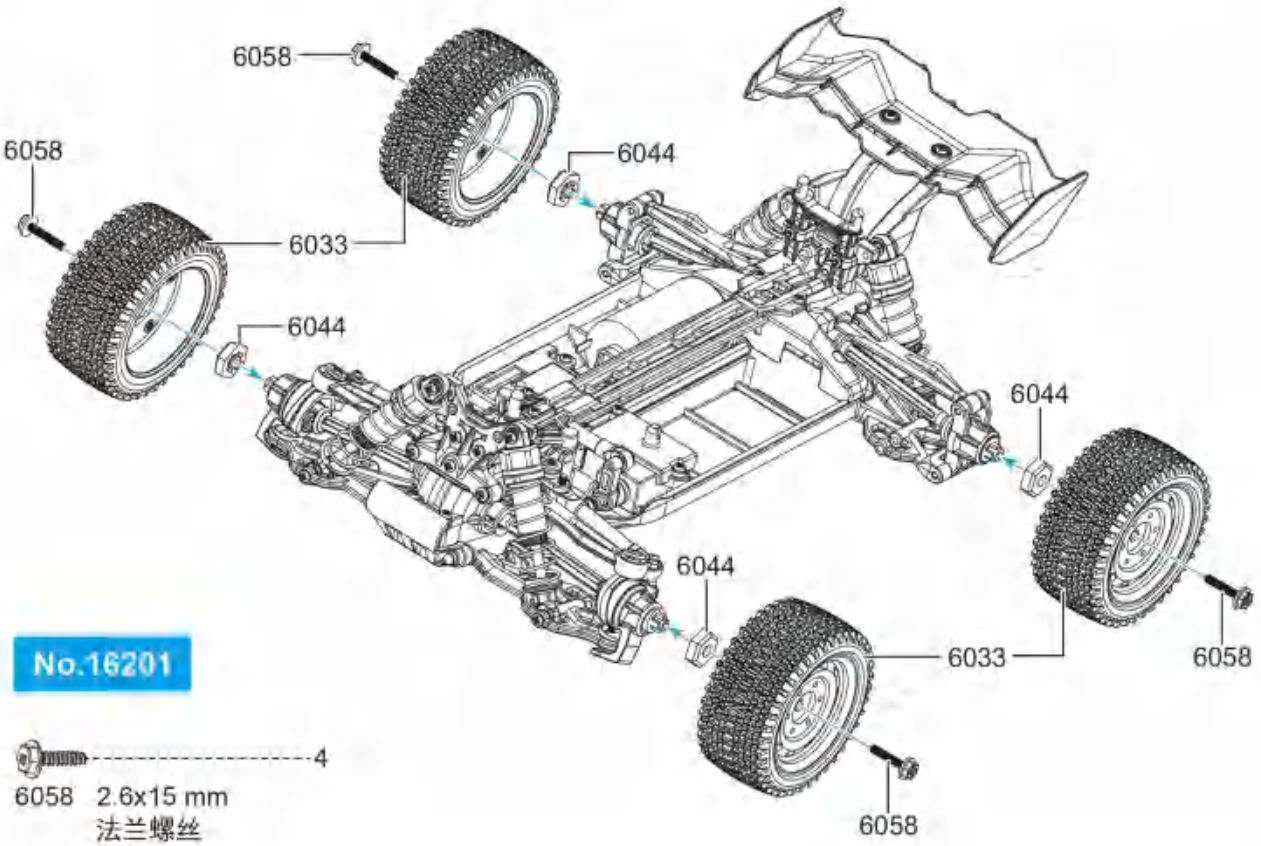

No.16201

4

6058 2.6x15 mm
法兰螺丝
Flange screw

49 安装无刷车轮 Brushless wheel installation

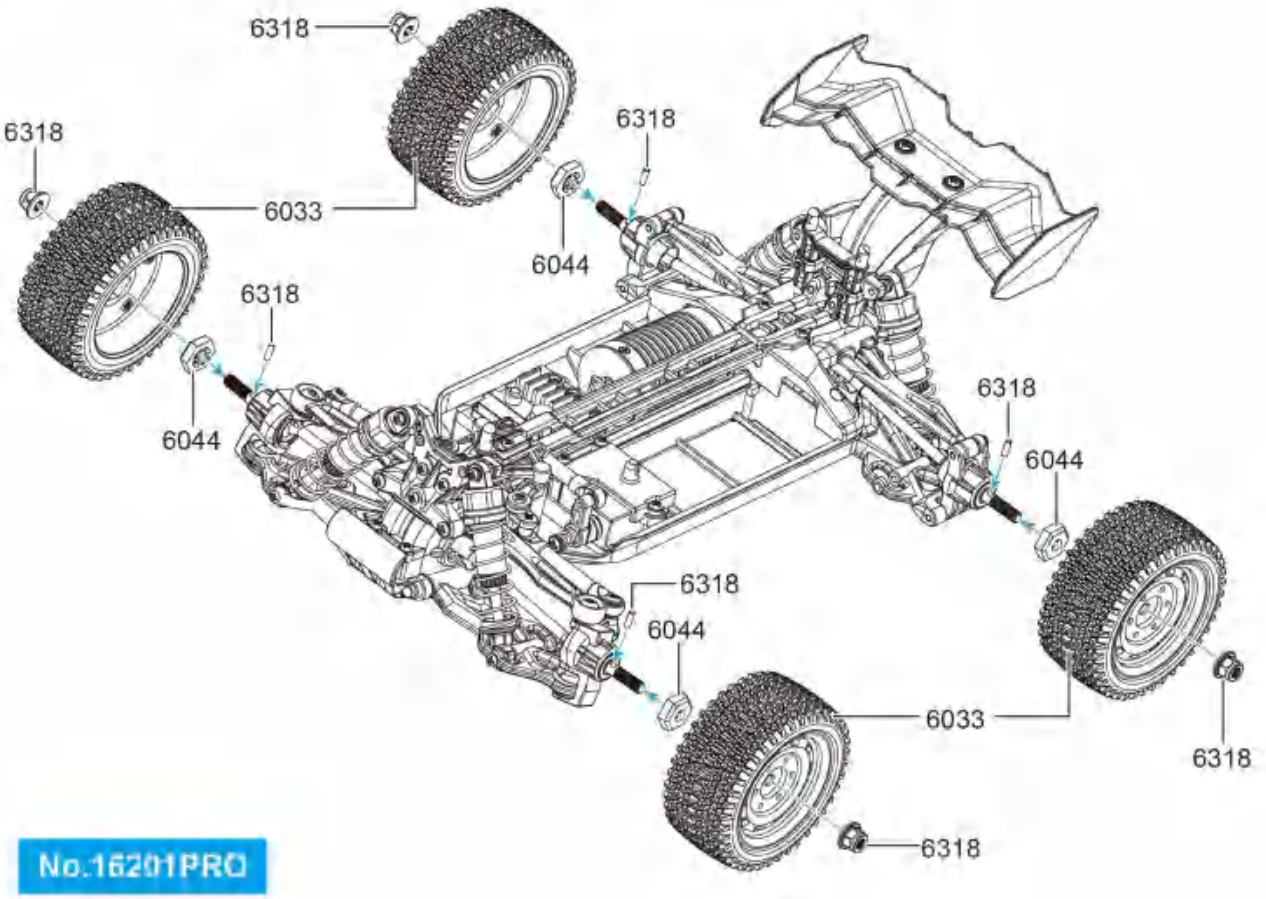

No.16201PRO

50 安装电池 Battery pack installation

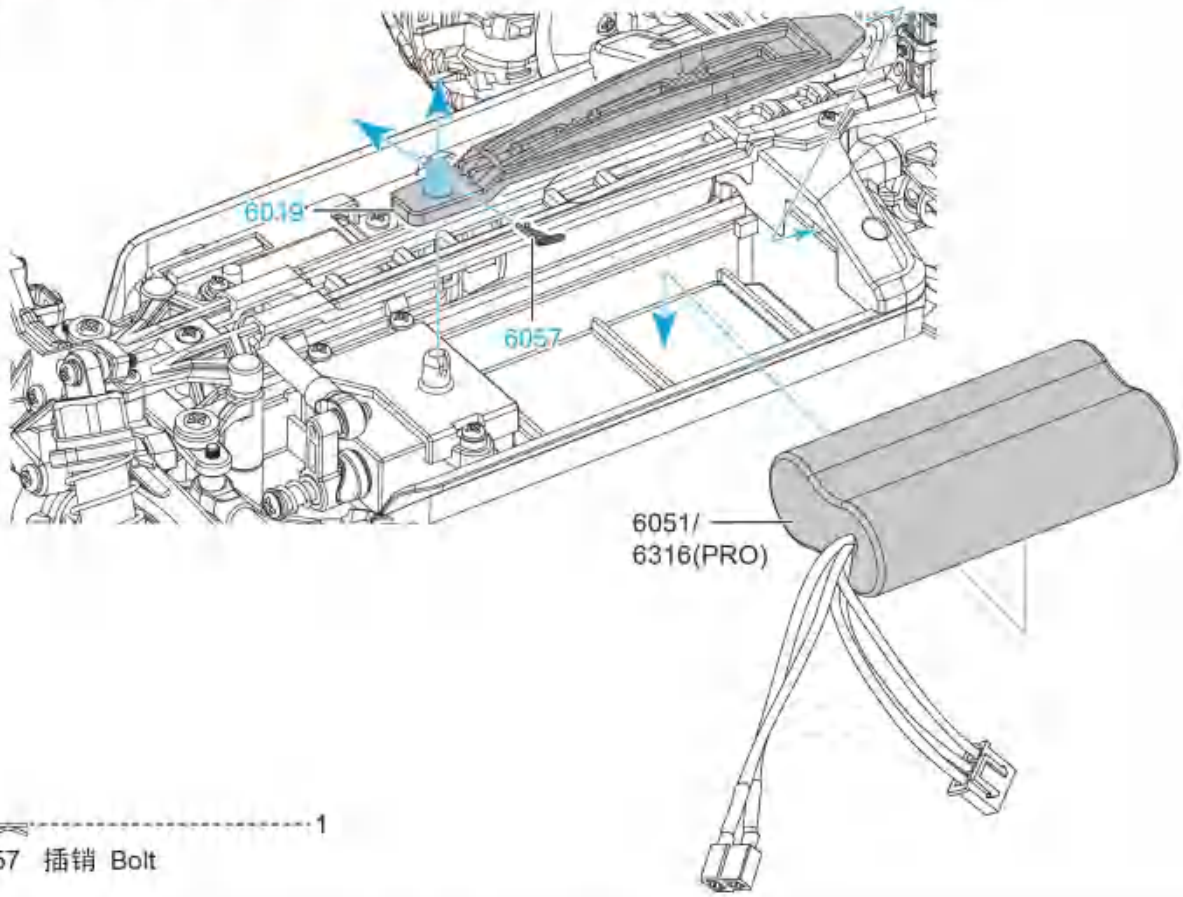

1

6057 插销 Bolt

51 安装前车壳支柱 Install the front car shell strut

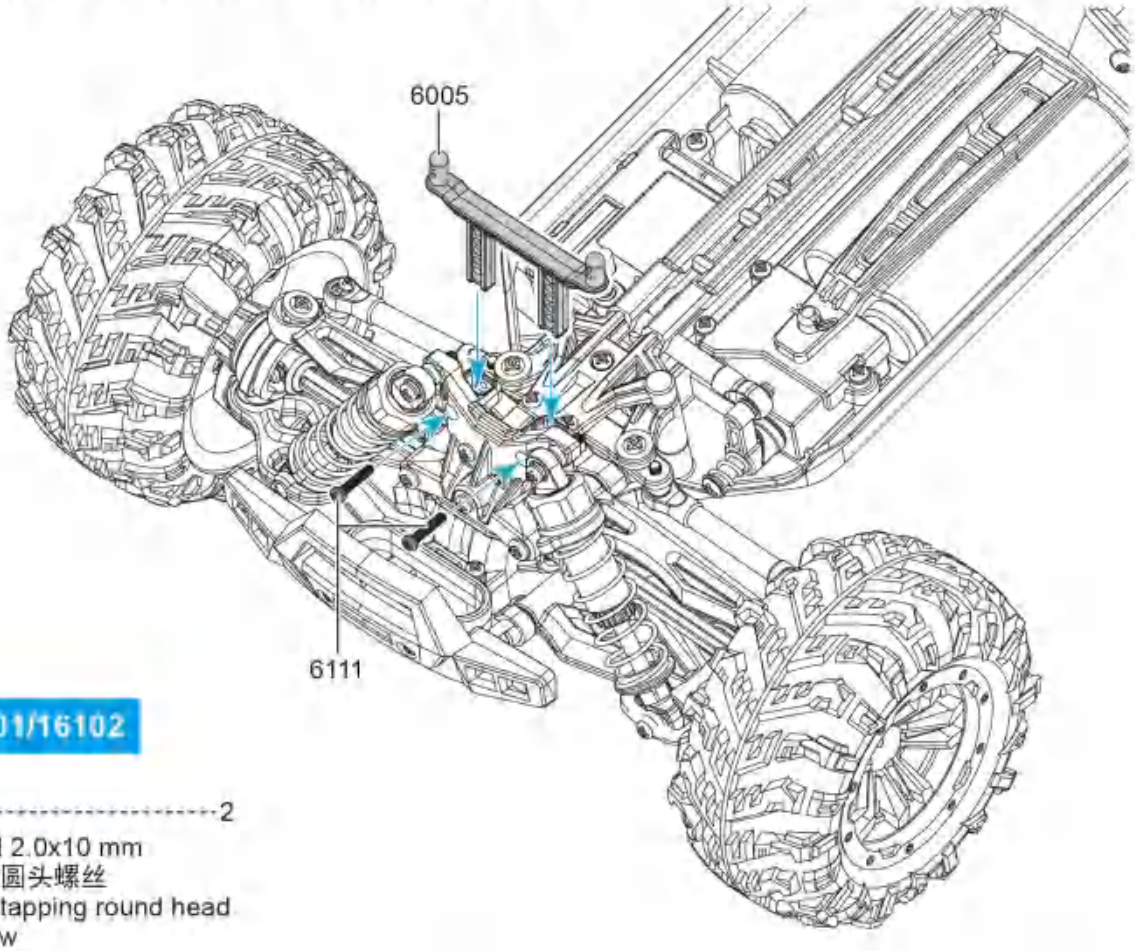

No.16101/16102

2

6111 PBH 2.0x10 mm
自攻圆头螺丝
Self tapping round head screw

52 安装前车壳支柱 Install the front car shell strut

No.16103

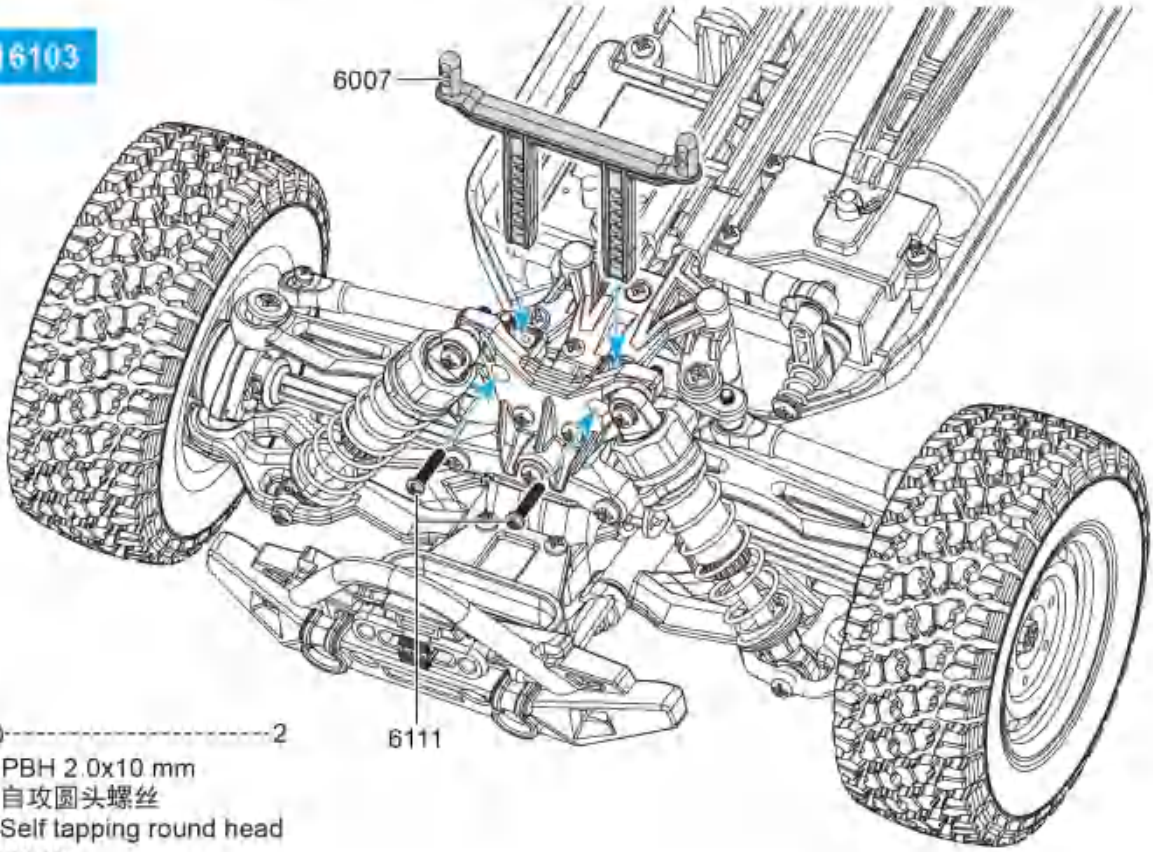

2

6111 PBH 2.0x10 mm
自攻圆头螺丝
Self tapping round head screw

53 安装前车壳支柱 Install the front car shell strut

No.16104

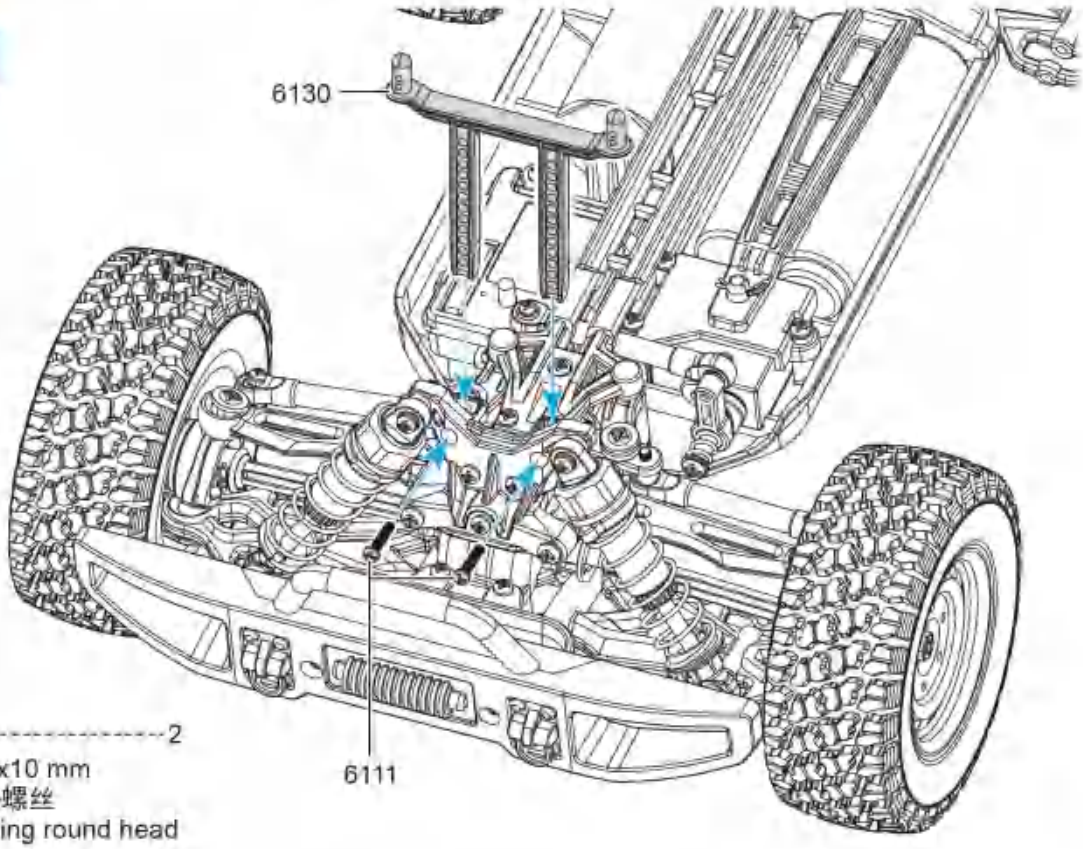

2

6111 PBH 2.0x10 mm
自攻圆头螺丝
Self tapping round head screw

54 安装前车壳支柱 Install the front car shell strut

No.16106

6145

6111

2

6111 PBH 2.0x10 mm
自攻圆头螺丝
Self tapping round head screw

55 安装前车壳支柱 Install the front car shell strut

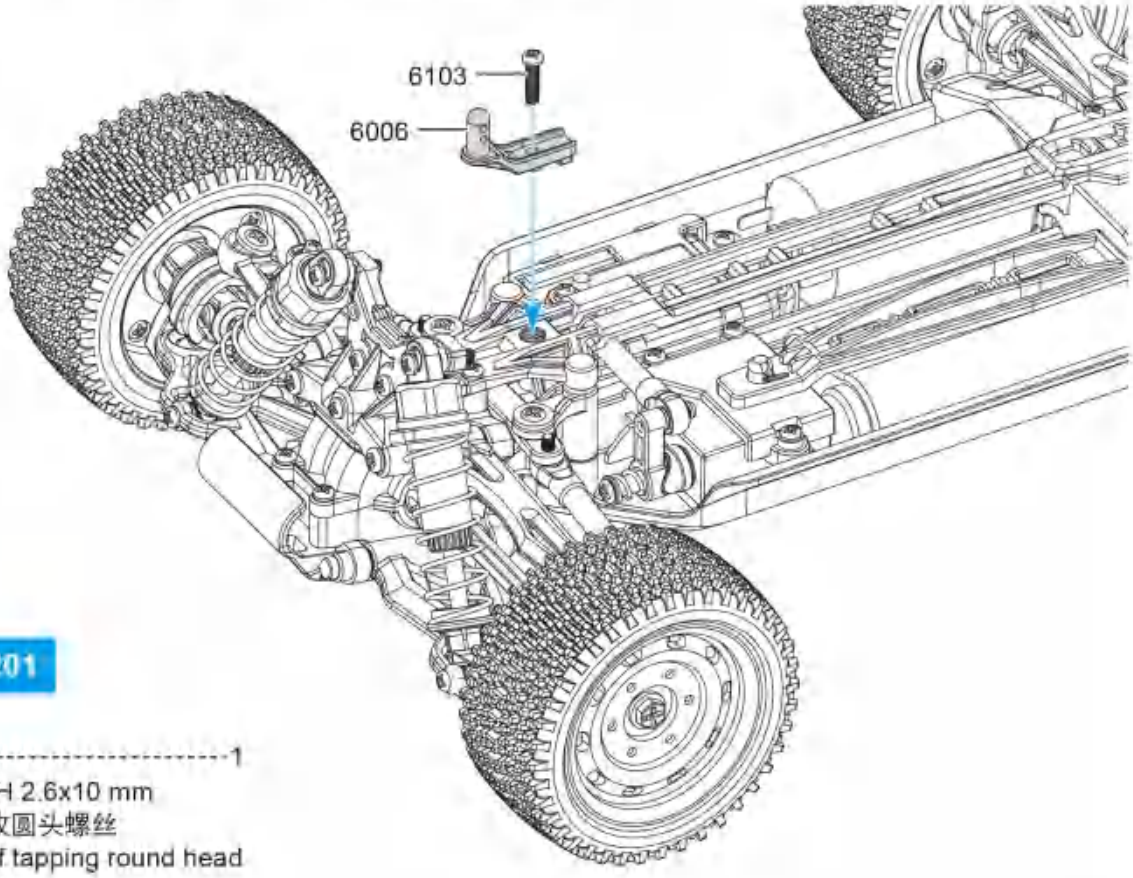

No.16201

1

6103 PBH 2.6x10 mm
自攻圆头螺丝
Self tapping round head screw

56 安装后车壳支柱 Install the rear car shell strut

No.16103

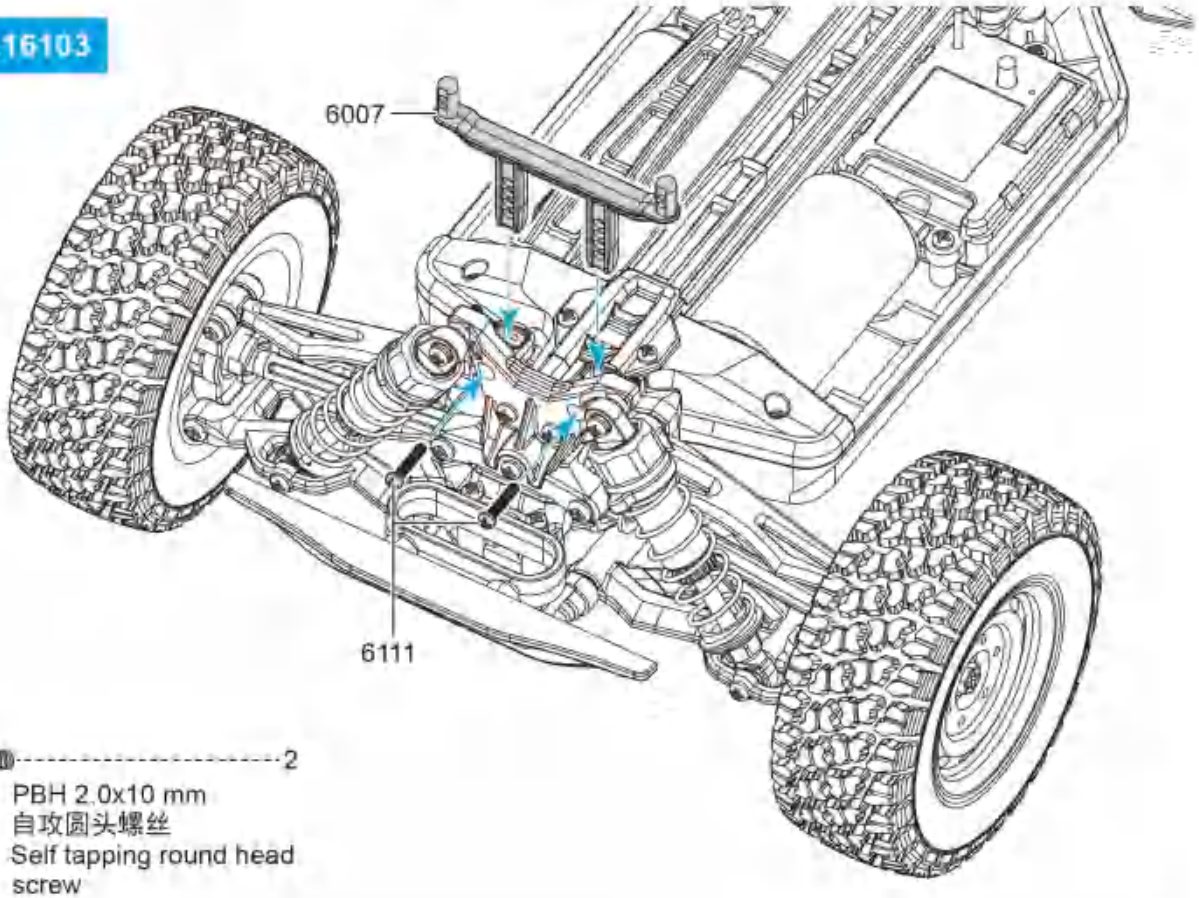

2

6111 PBH 2.0x10 mm
自攻圆头螺丝
Self tapping round head screw

57 安装后车壳支柱 Install the rear car shell strut

No.16104

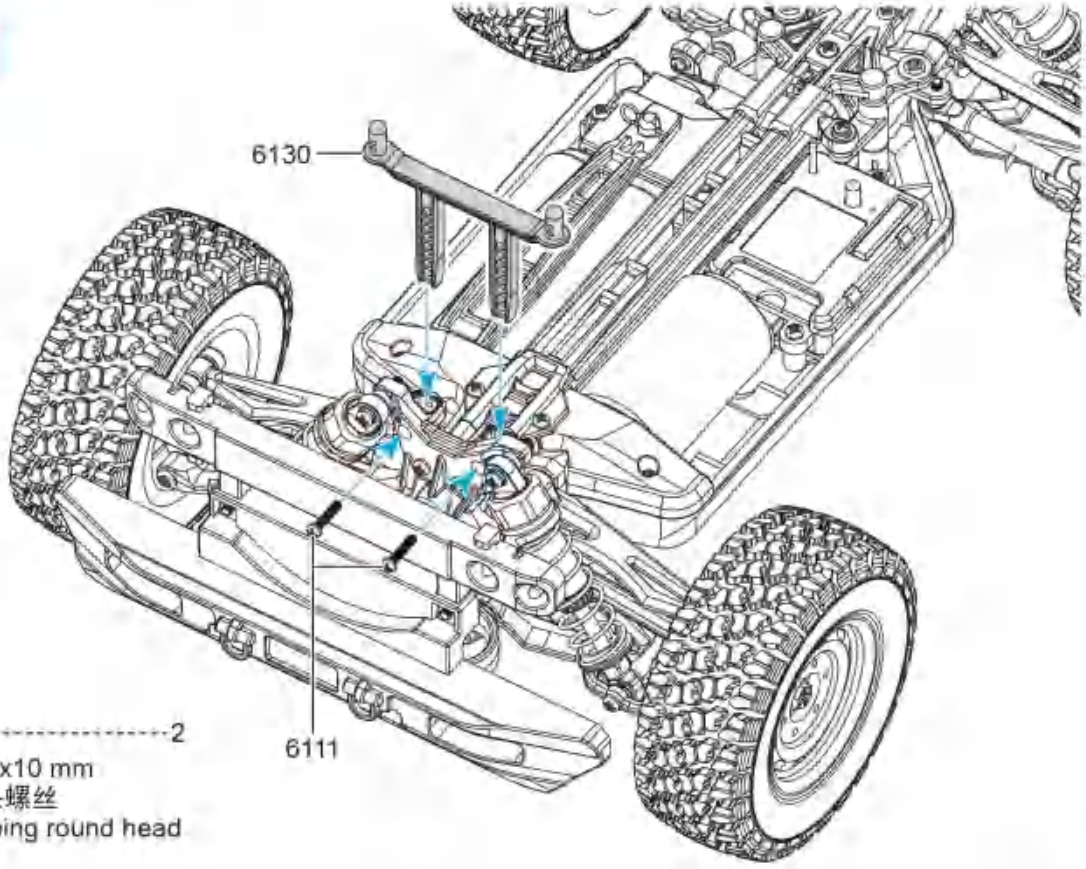

2

6111 PBH 2.0x10 mm
自攻圆头螺丝
Self tapping round head screw

58 安装后车壳支柱
Install the rear car shell strut

2

6111 PBH 2.0x10 mm
自攻圆头螺丝
Self tapping round head screw

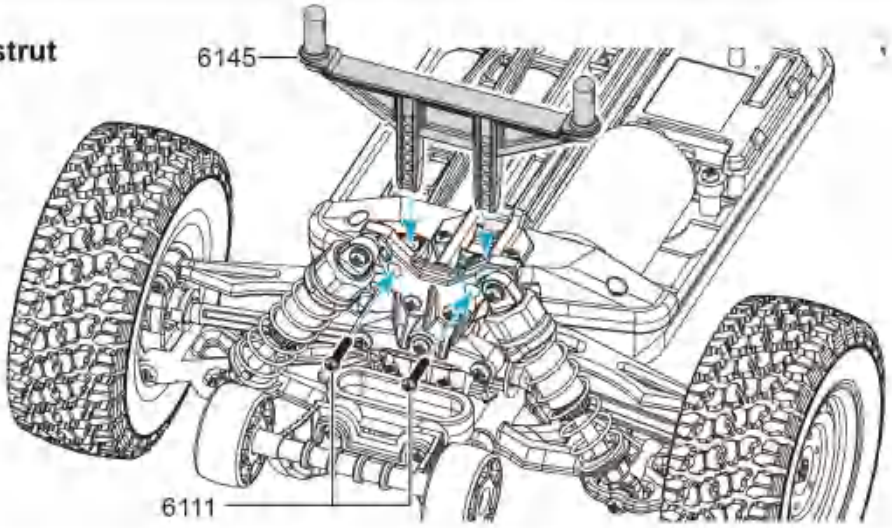

No.16106

59 连接电线 Connect wire

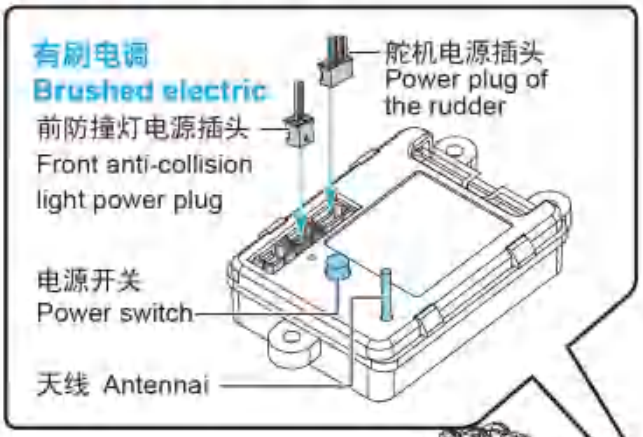

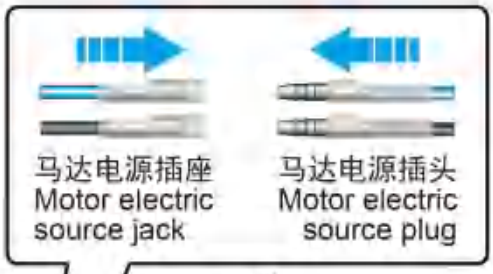

No.16101/16102

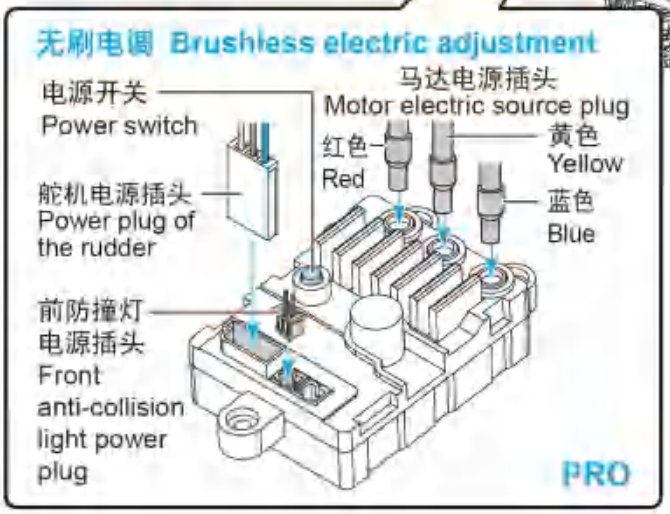

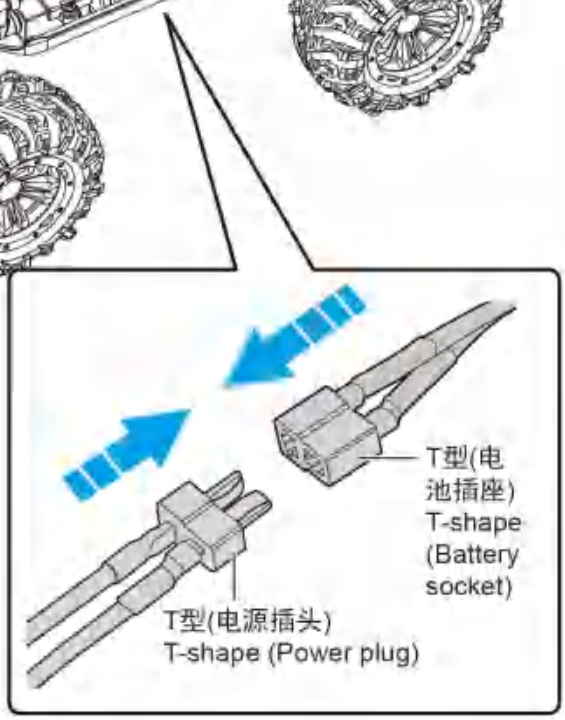

60 连接电线 Connect wire

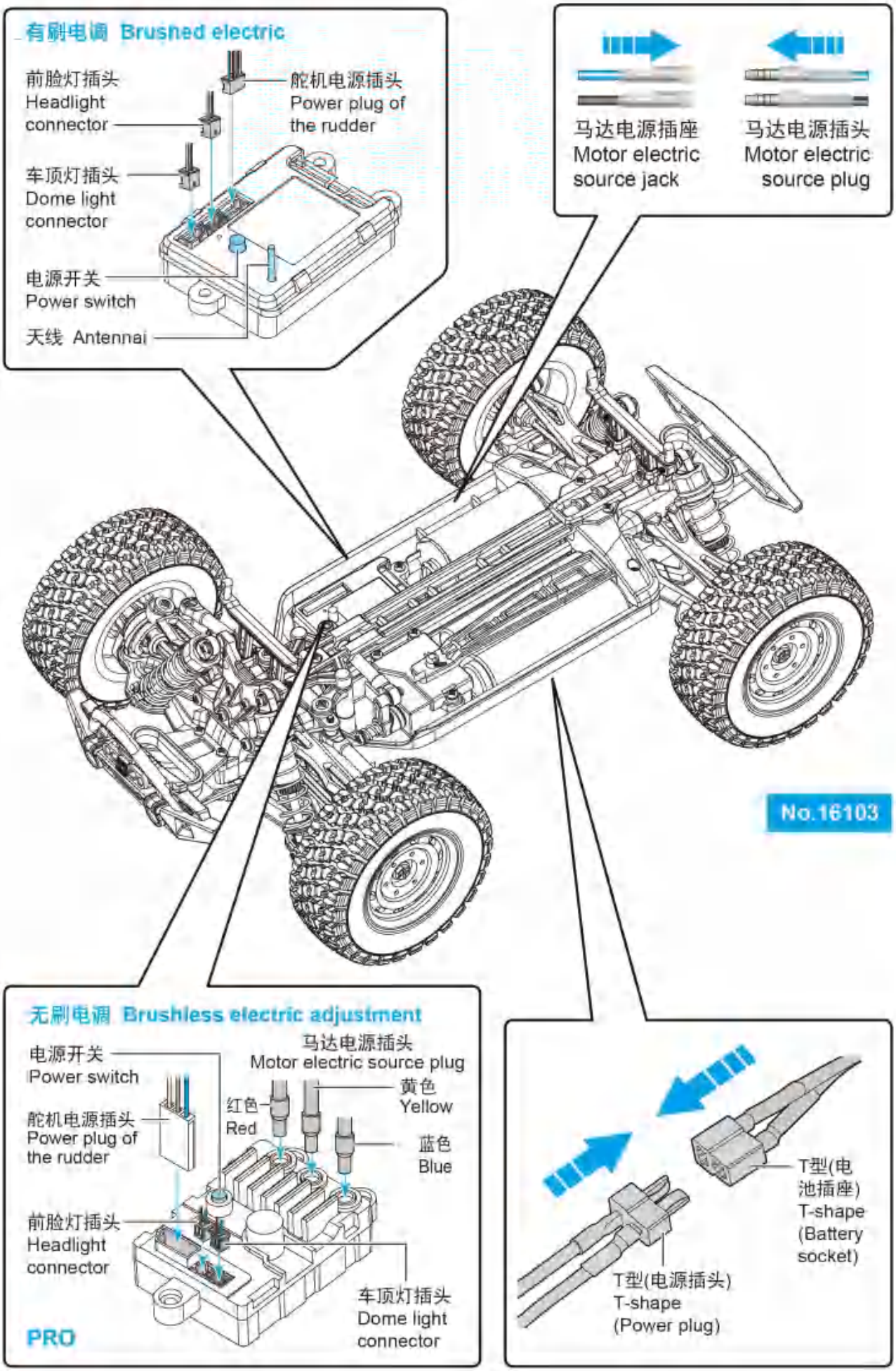

61 连接电线 Connect wire

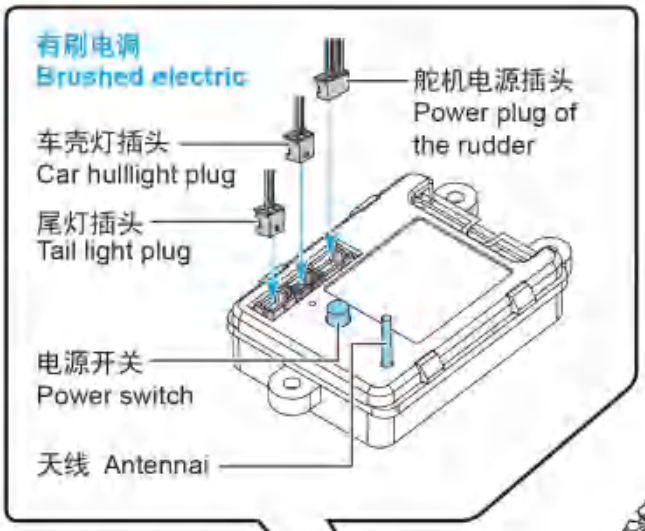

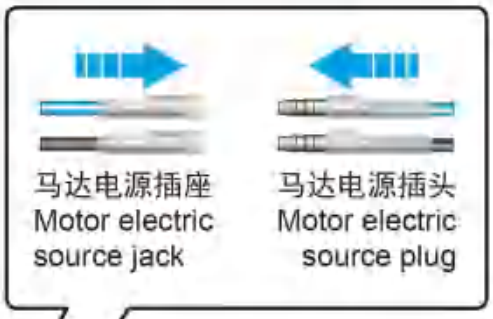

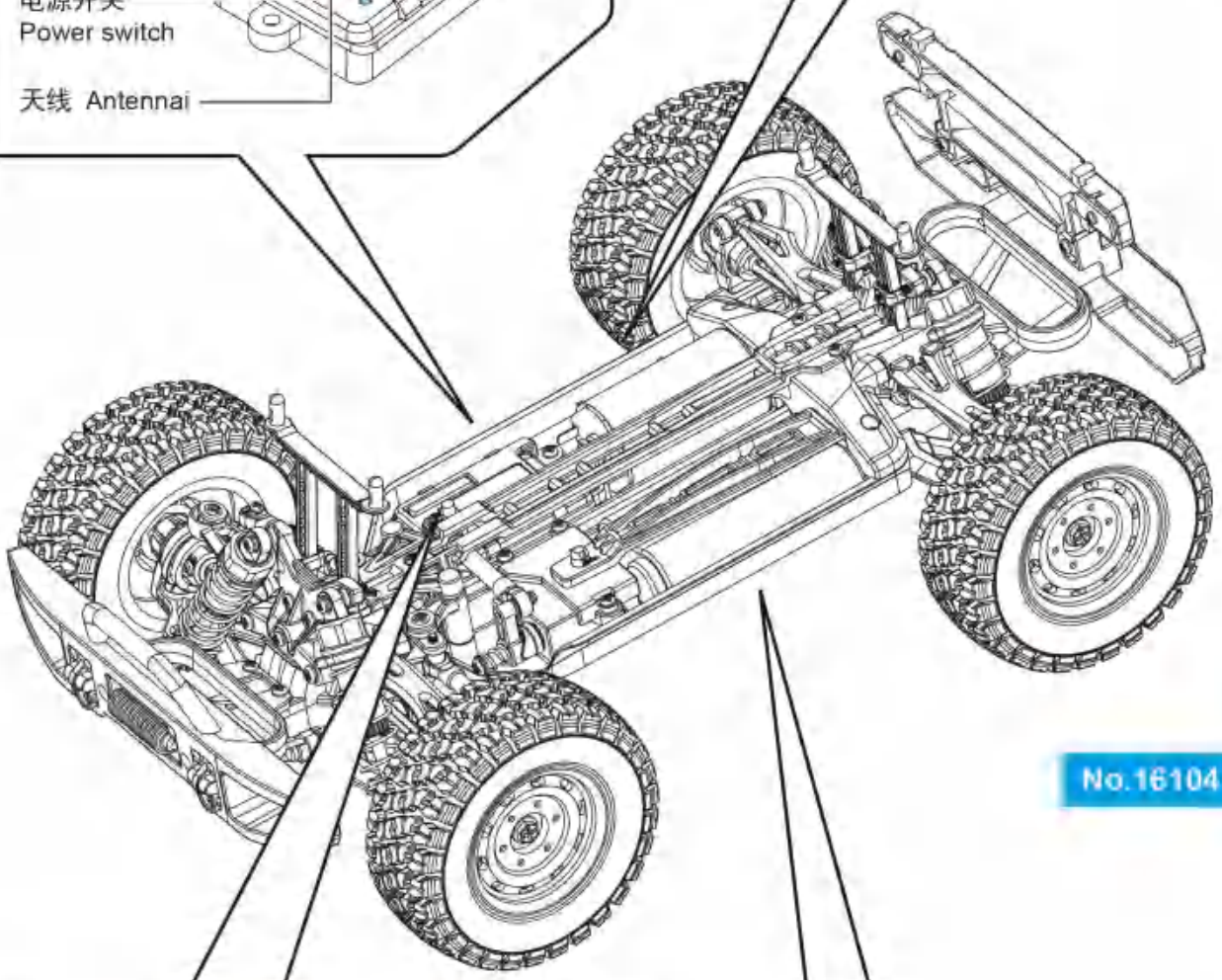

No.16104

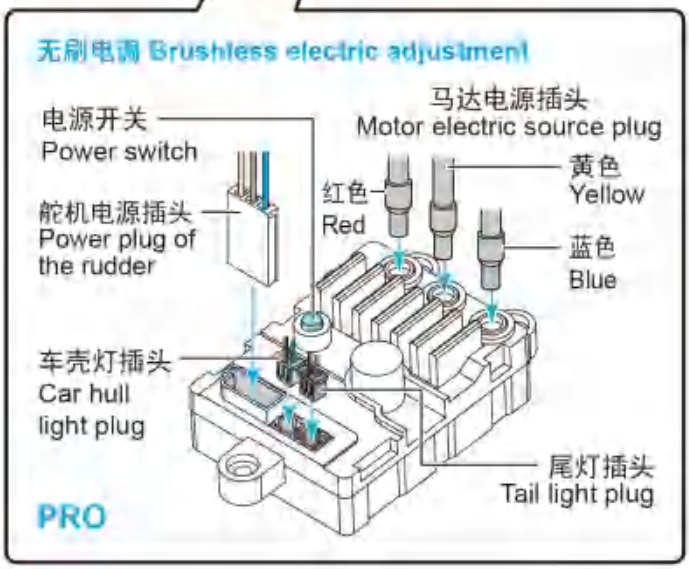

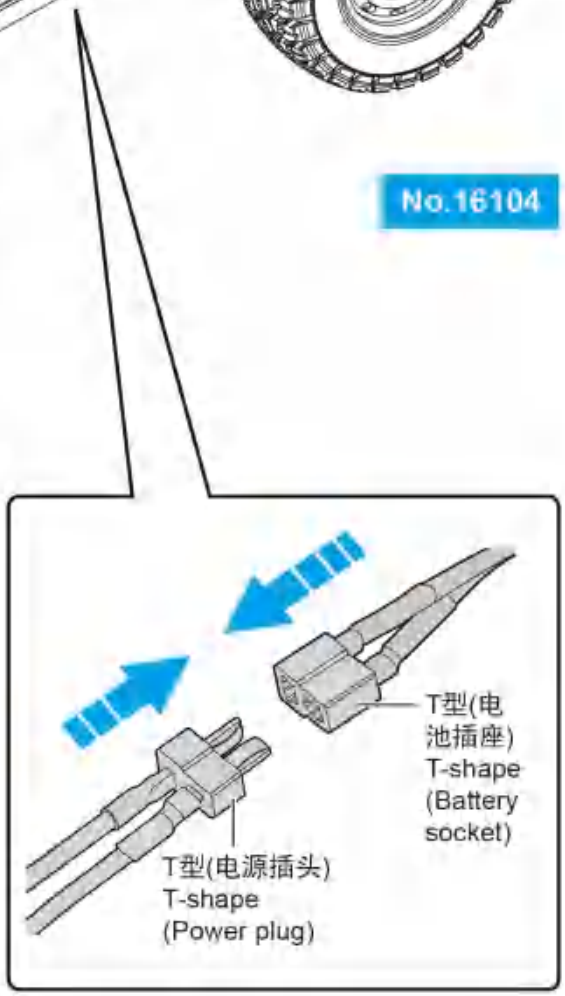

62 连接电线 Connect wire

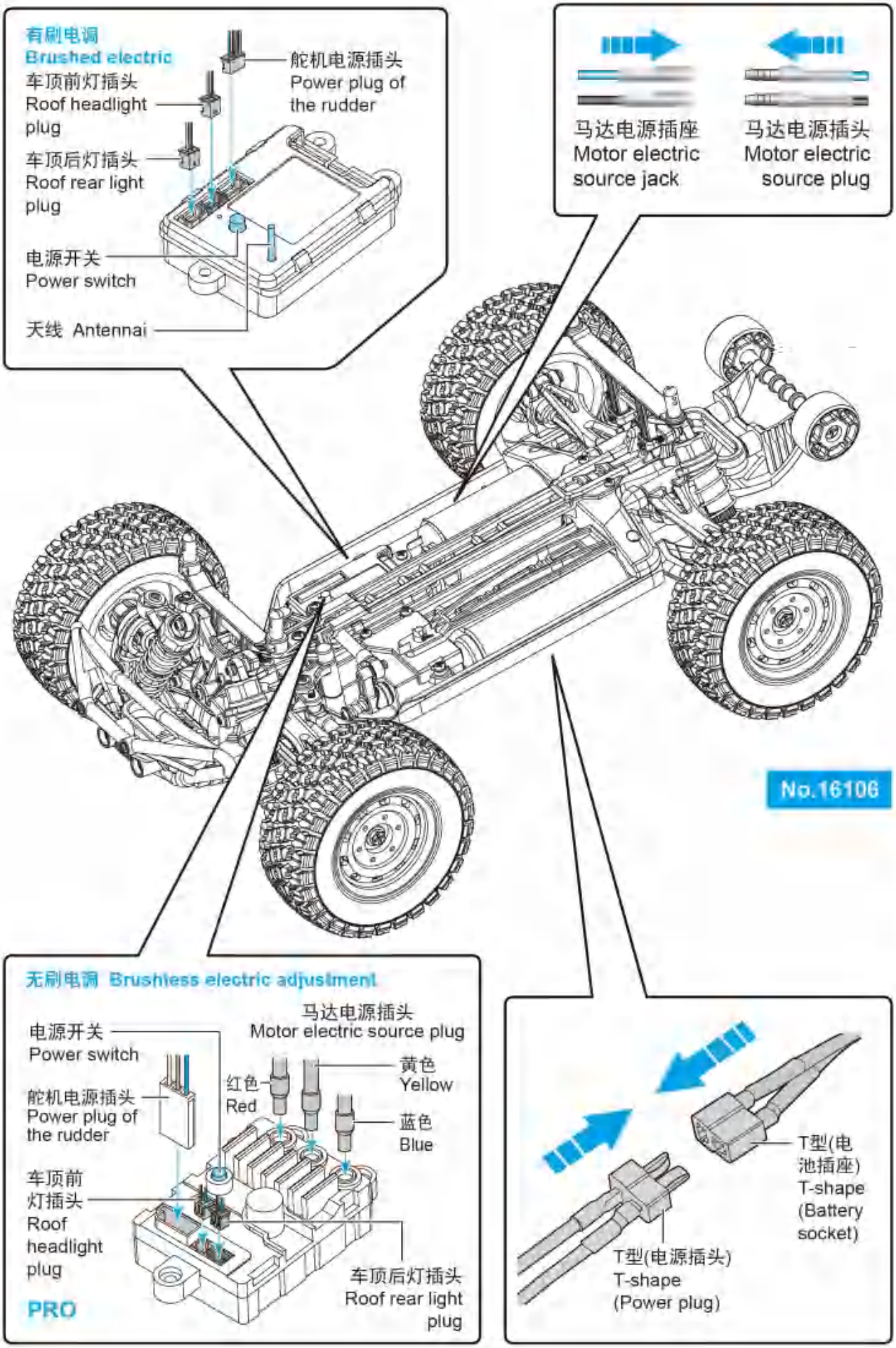

63 连接电线 Connect wire

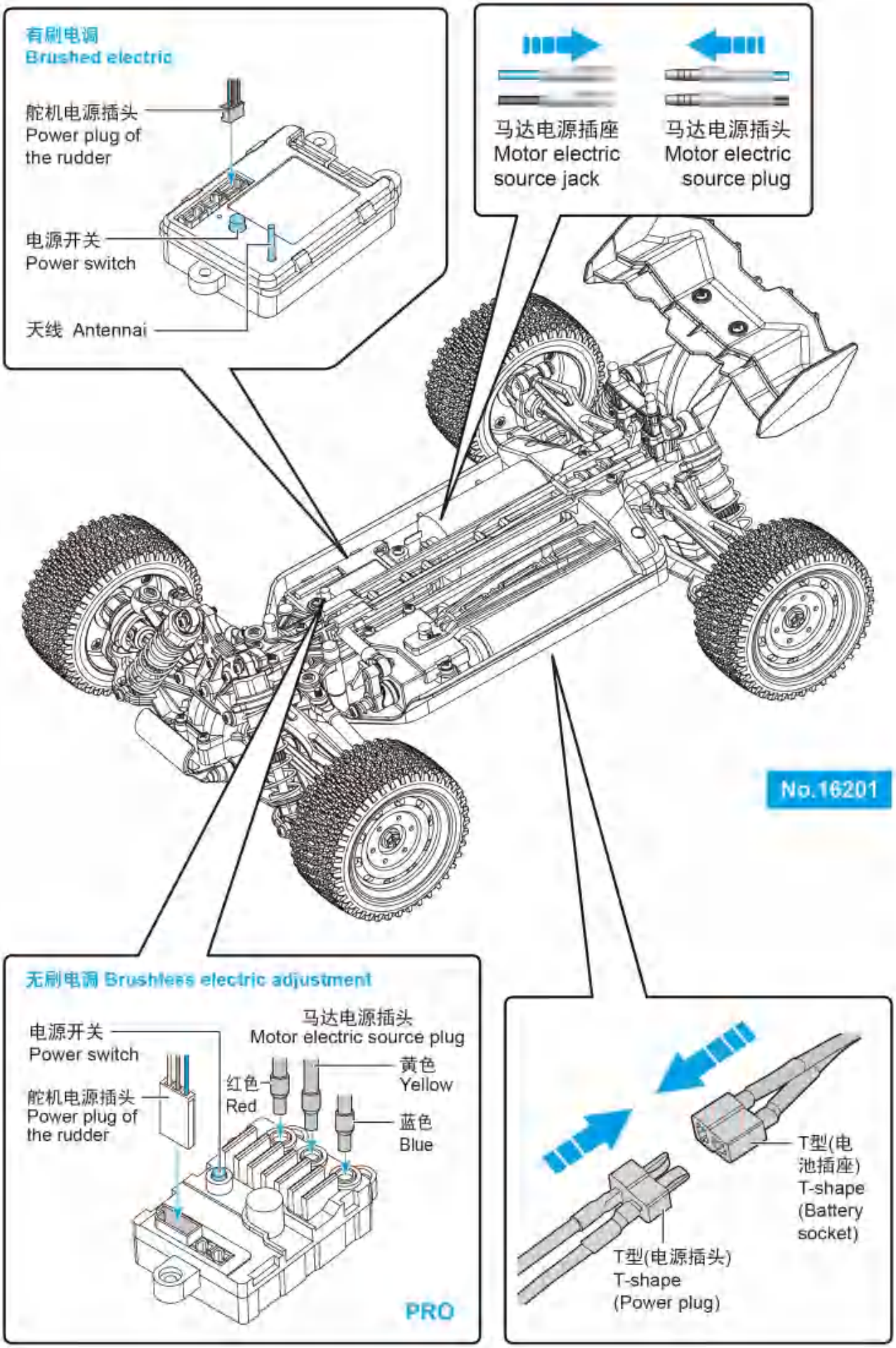

64 安装车壳 Install ation car shell

No.16101

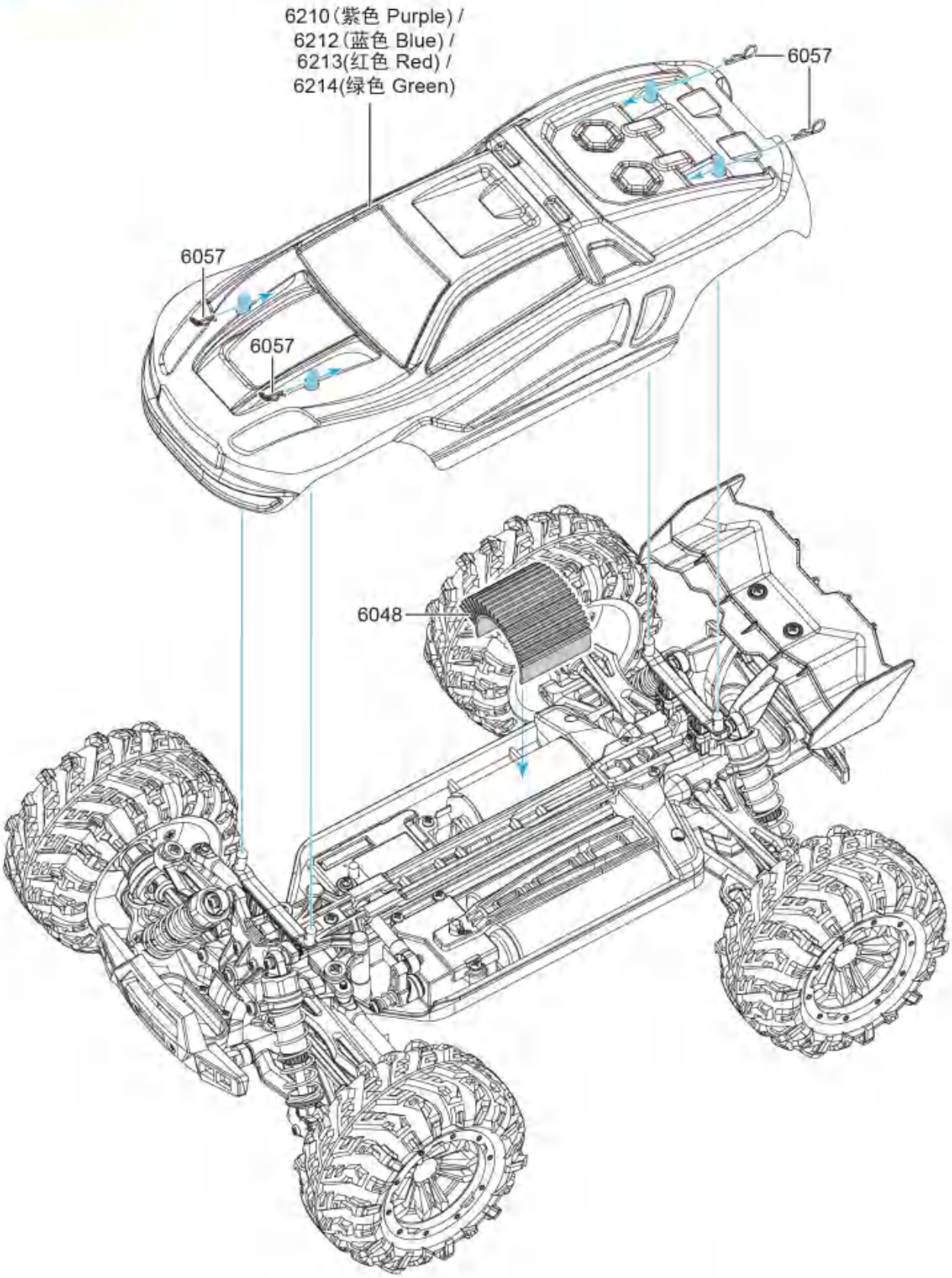

4

6057 插销 Bolt

65 安装车壳 Install ation car shell

No.16102

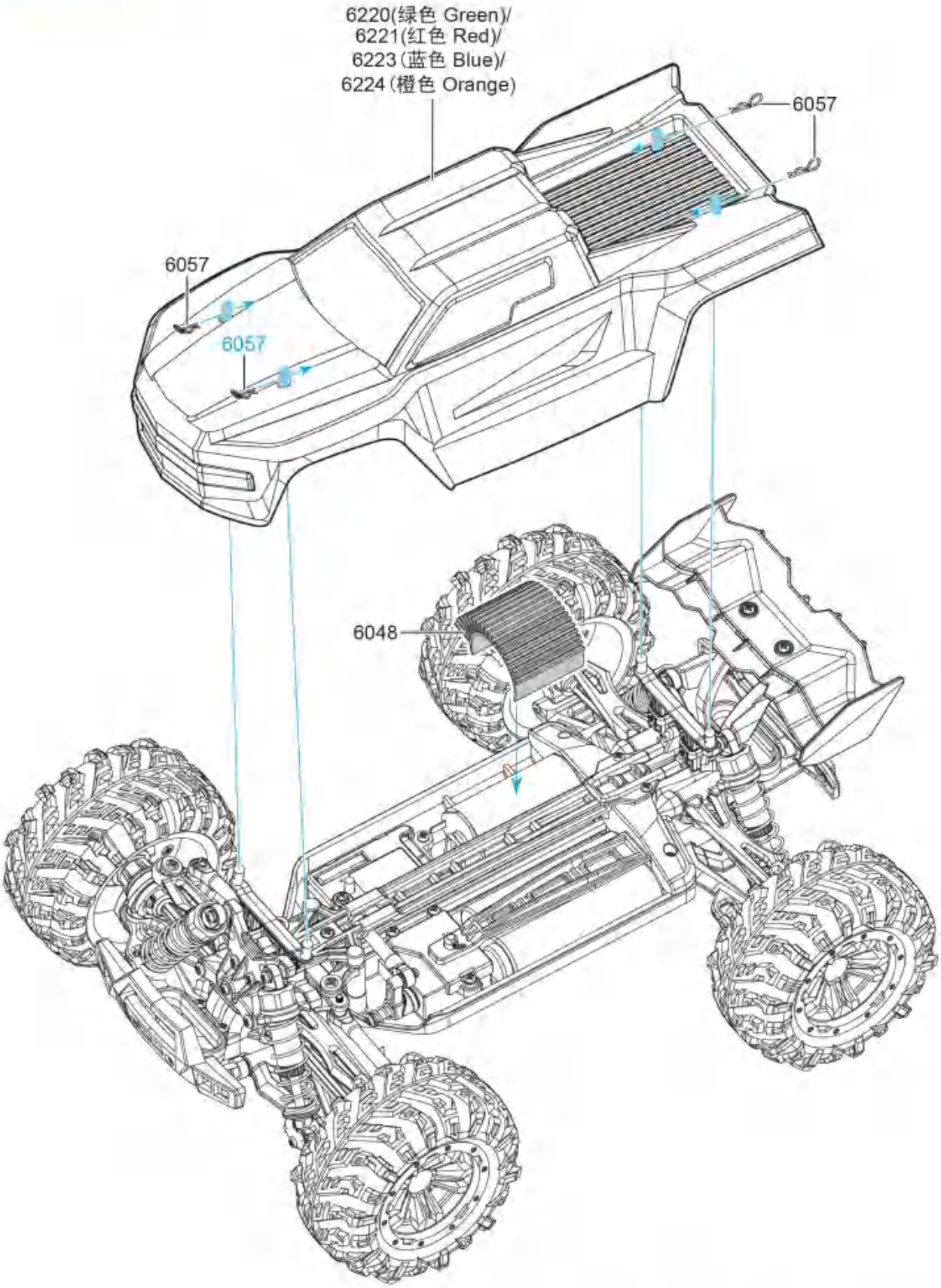

4

6057 插销 Bolt

66 安装车壳 Install ation car shell

No.16103

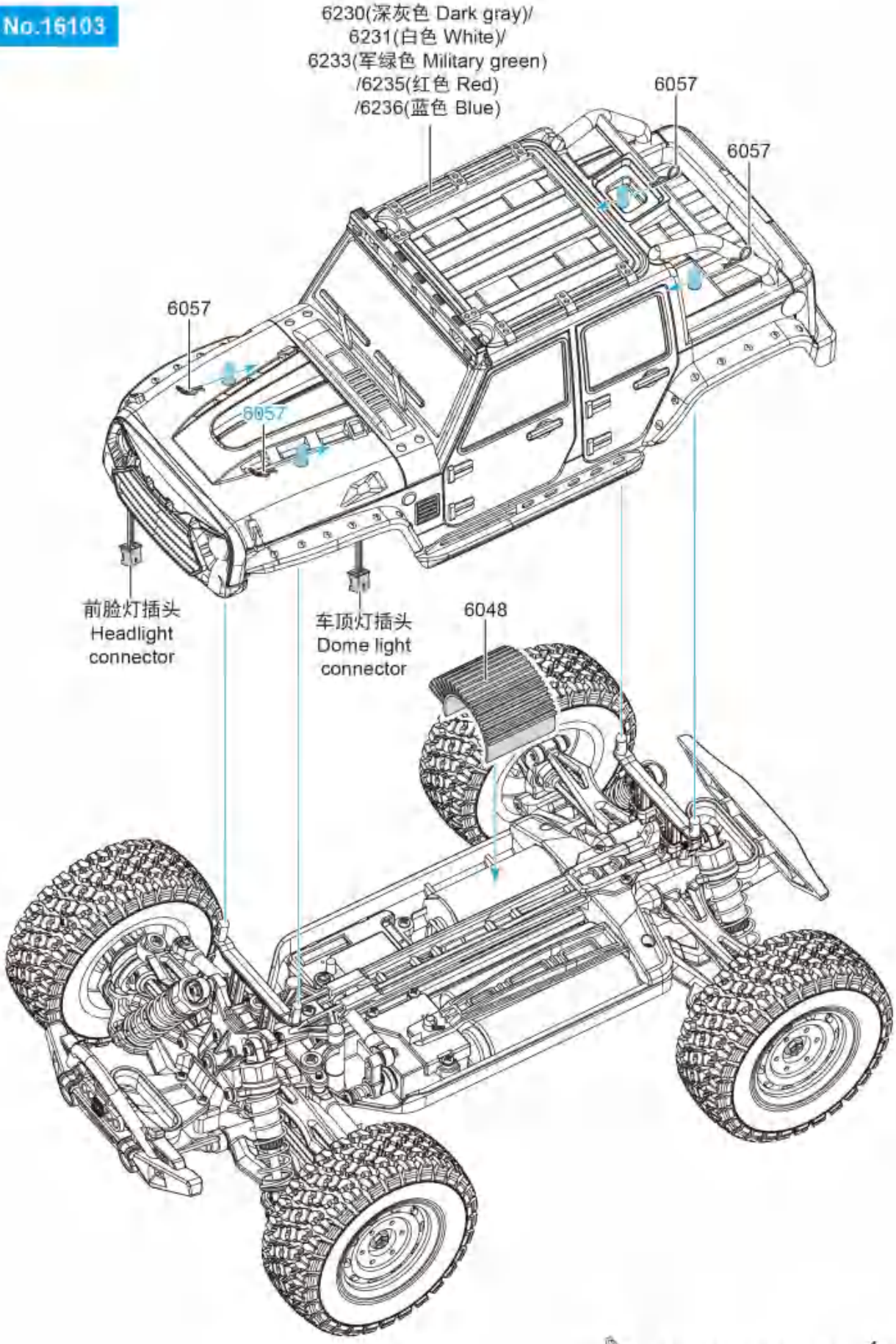

4

6057 插销 Bolt

67 安装车壳 Install ation car shell

No.15104

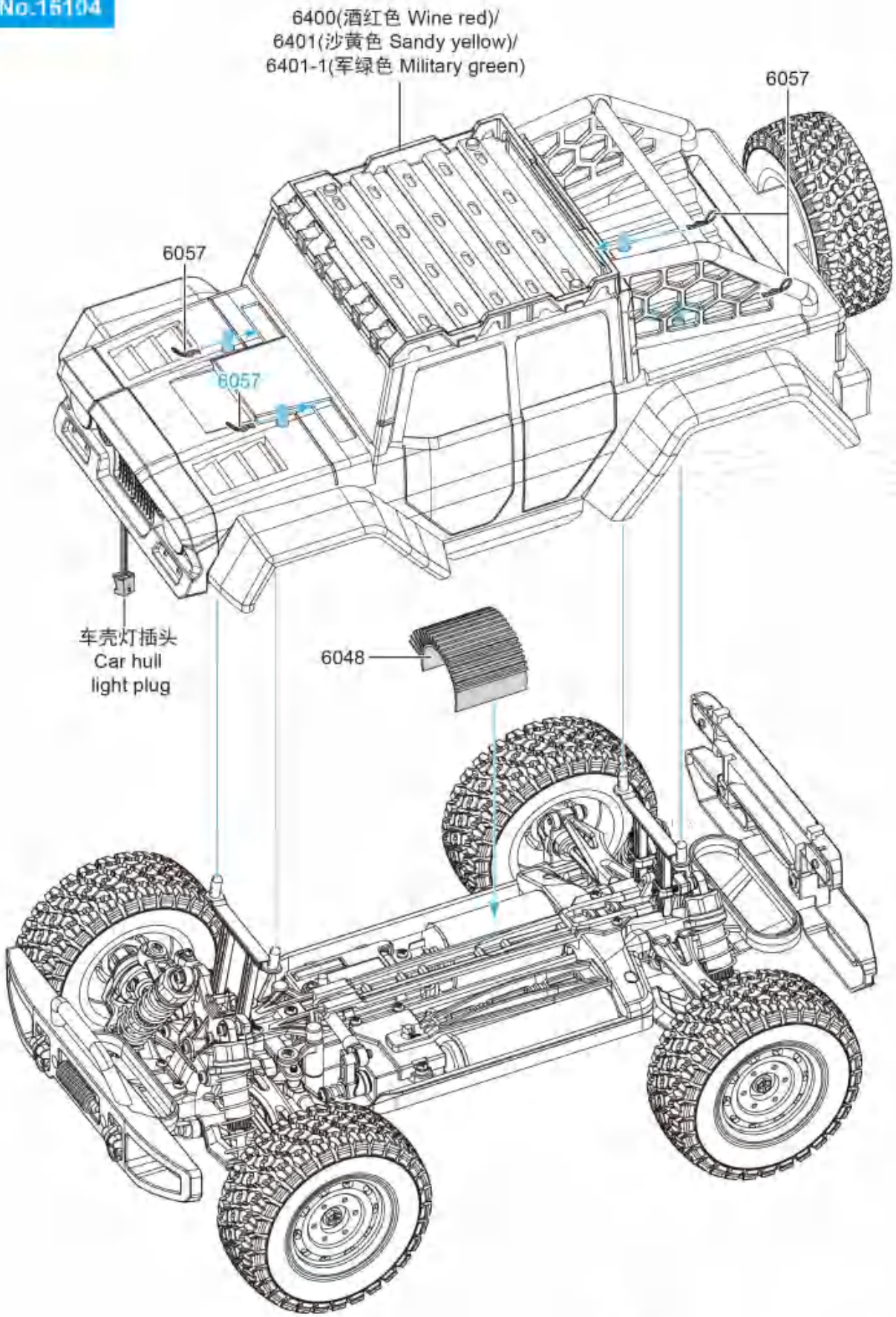

4

6057 插销 Bolt

68 安装车壳 Install ation car shell

No.15106

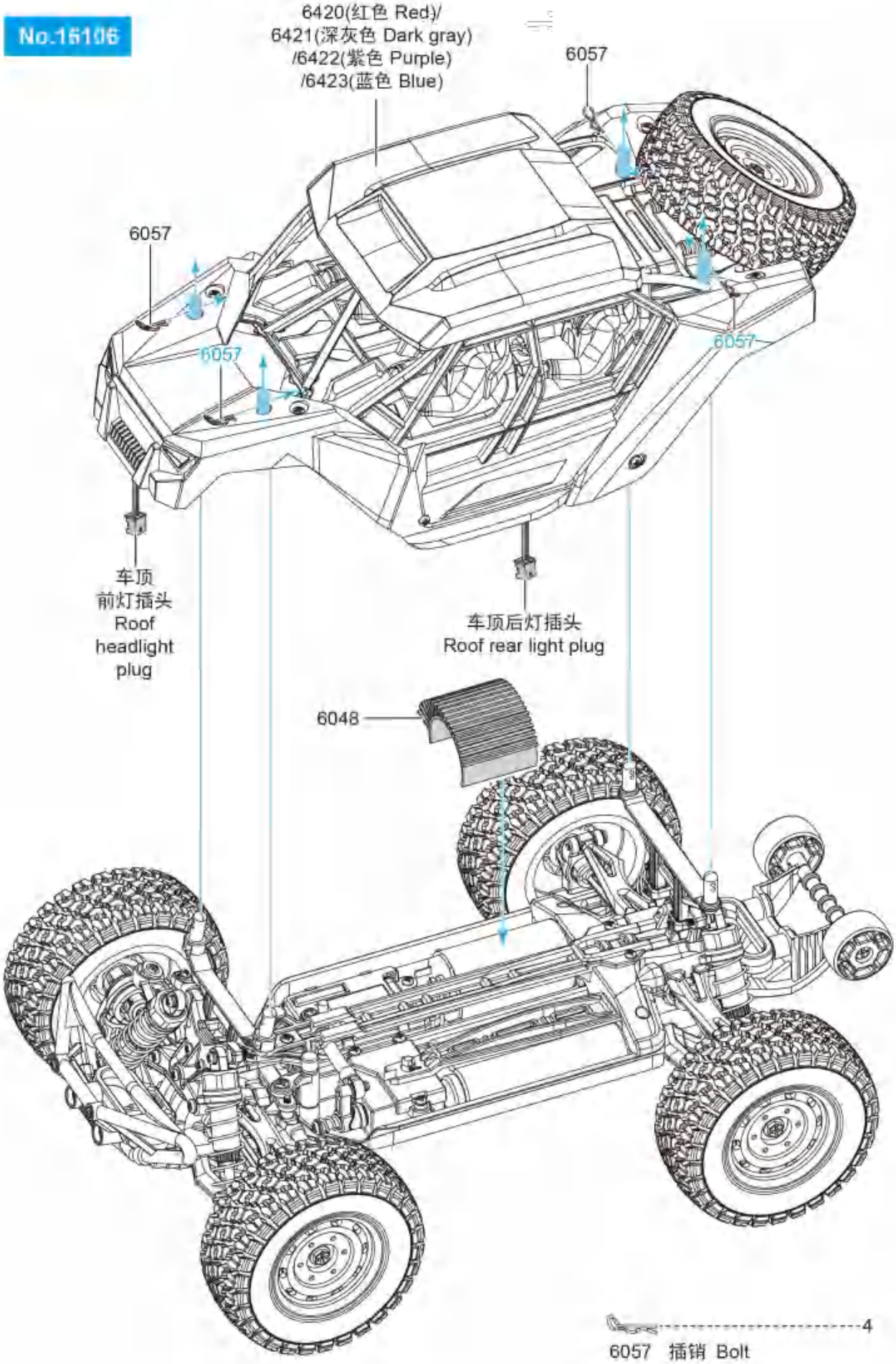

69 安装车壳 Install ation car shell

No.16201

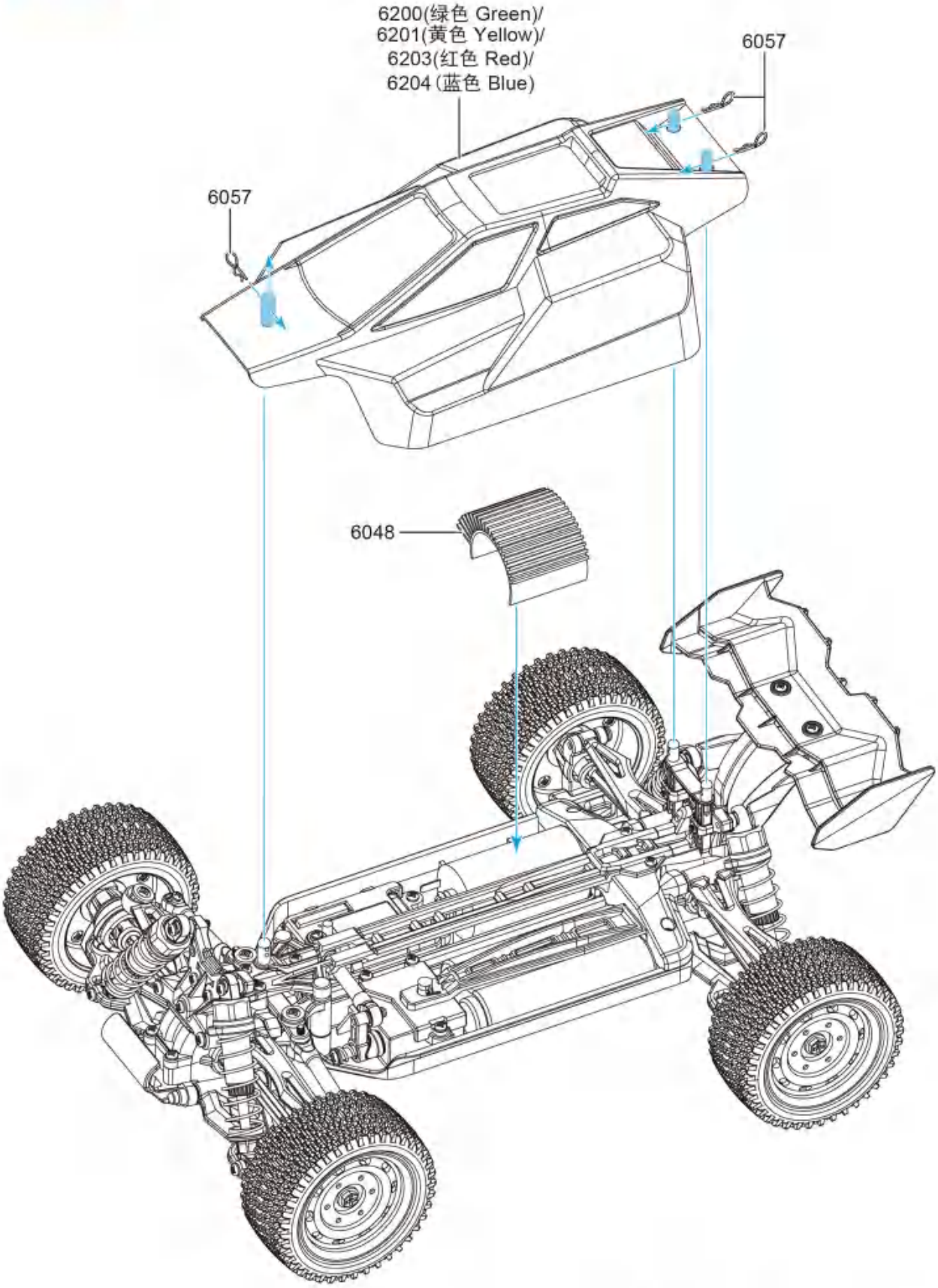

4

6057 插销 Bolt

模型车配件表 Spare part list

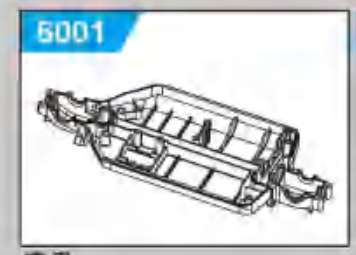

底盘
Chassis

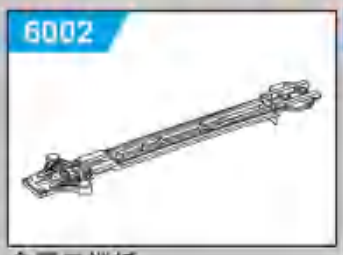

金属二楼板
Upper deck

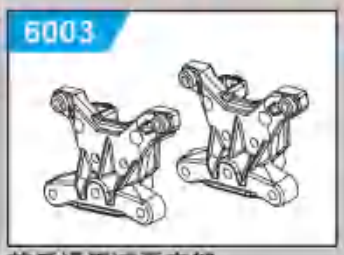

前后通用减震支架
Shock towers(Fr./Rr.)

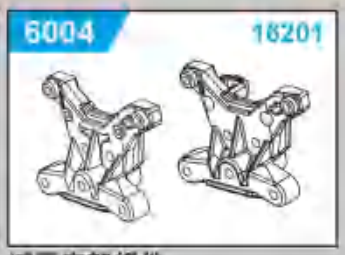

减震支架组件
Shock absorber bracket assembly

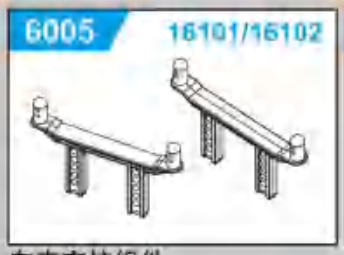

车壳支柱组件
Car shell strut

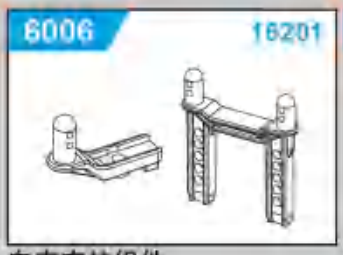

车壳支柱组件
Car shell strut

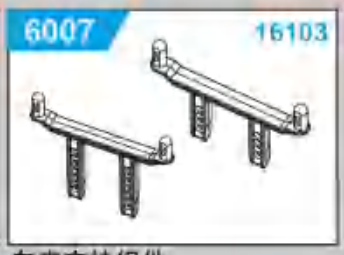

车壳支柱组件
Car shell strut

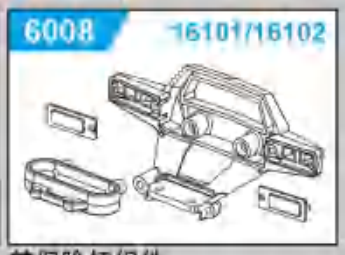

前保险杠组件
Front bumper assembly

后保险杠组件
Rear bumper assembly

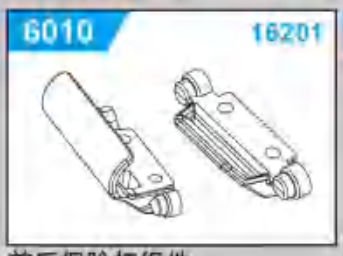

前后保险杠组件
Front and rear bumper assembly

前保险杠组件
Front bumper assembly

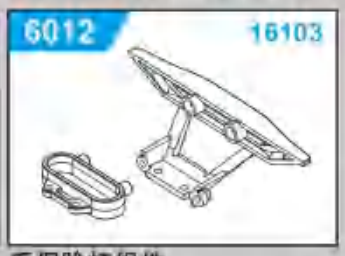

后保险杠组件
Rear bumper assembly

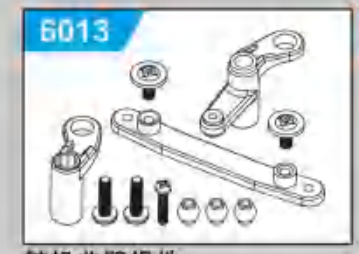

舵机曲臂组件
Steering assembly

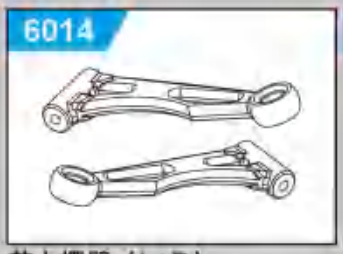

前上摆臂（L+R）
Front upper sway arms(L/R)

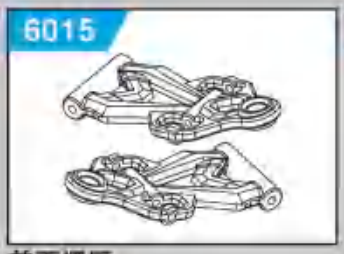

前下摆臂
Front lower sway arms

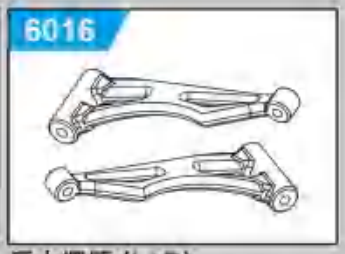

后上摆臂（L+R）
Rear upper sway arms(L/R)

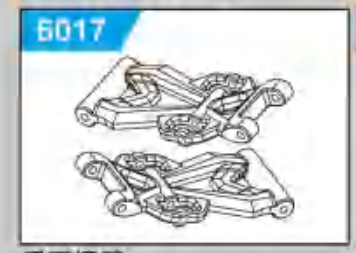

后下摆臂
Rear lower sway arms

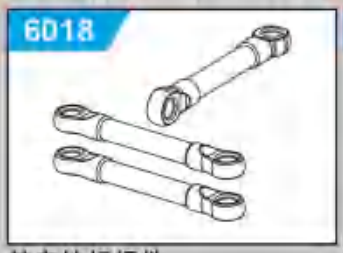

转向拉杆组件
Steering assembly

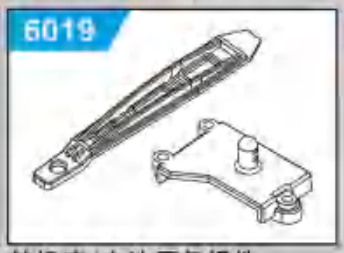

舵机座/电池压条组件
Ervo seat / Battery clasp assembly

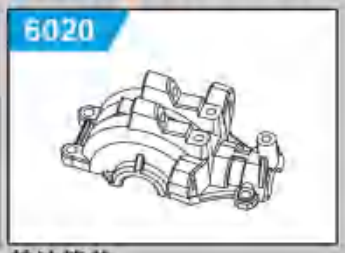

前波箱盖
Front gear box top housing

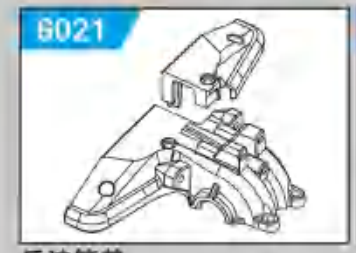

后波箱盖
Rear gear box top housing

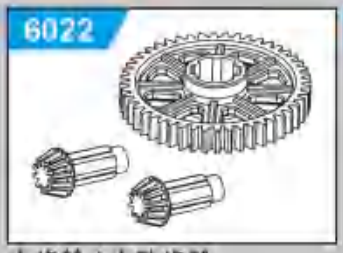

主齿轮 / 主动齿轮
Spur gear / Drive pinions

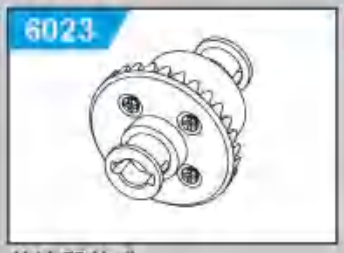

差速器总成
Components differential

舵机保护结构组件
Servo protection structure assembly

模型车配件表 Spare part list

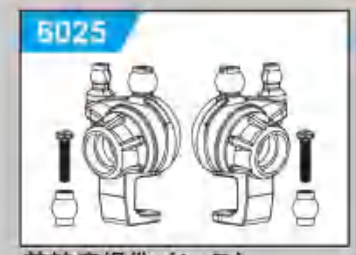

前轴座组件（L+R）
Front steering assembly(L+R)

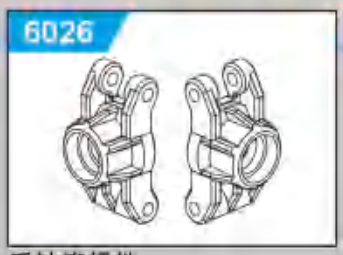

后轴座组件
Rear steering assembly

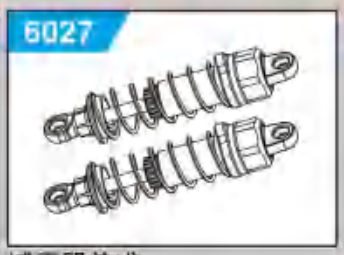

减震器总成
Shock absorbers

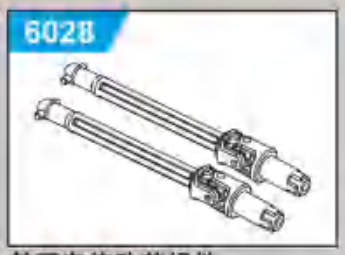

前万向传动节组件
Front universal drive shafts

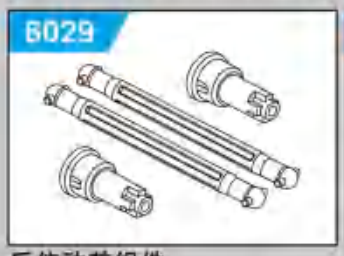

后传动节组件
Rear drive assembly

尾翼组件
Rear wing assembly

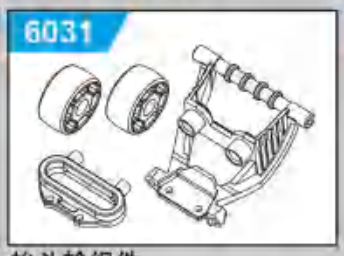

抬头轮组件
Head up wheel assembly

塑胶球头
Plastic pivot balls

70MM越野轮胎(黑毂)
70mm Off-road tires
(Black rims)

85MM大脚轮胎(黑毂)
85mm Monster tires
(Black rims)

82MM越野轮胎（深灰毂）
82mm Off-road tires
(Dark grey rims)

中传动六角轴
Center drive shaft

电机固定座(有刷)
Motor mount(Brush)

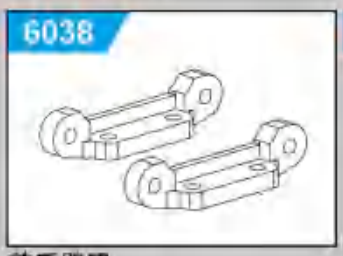

前后臂码
Suspension braces

转向光轴
Steering posts

摆臂轴销
Sway arm inside hinge pins

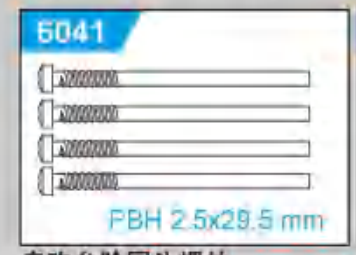

自攻台阶圆头螺丝
Self tapping step round
head screw

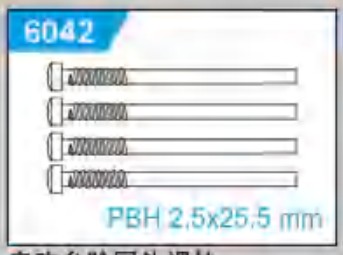

自攻台阶圆头螺丝
Self tapping step round
head screw

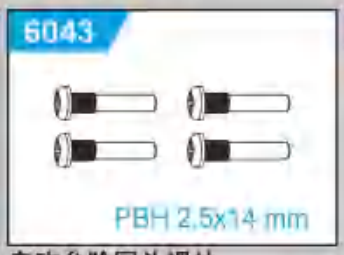

自攻台阶圆头螺丝
Self tapping step round
head screw

金属六角结合器
Metal hex coupler

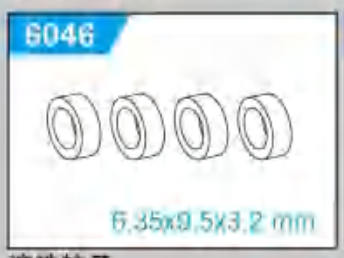

滚珠轴承
Ball bearings

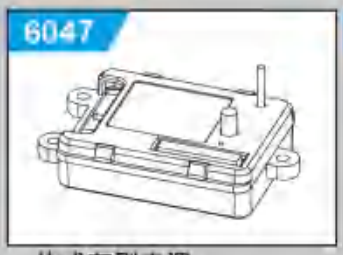

一体式有刷电调
Integrated brushed ESC

马达散热片
Aluminum motor heat sink

390电机总成
390 Motor assembly

模型车配件表 Spare part list

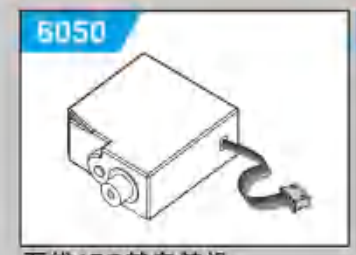

五线17G转向舵机
Steering servo(5-wire,17g)

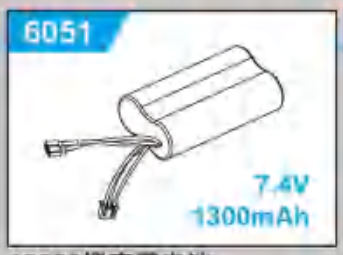

18650锂离子电池
18650 Li-ion battery

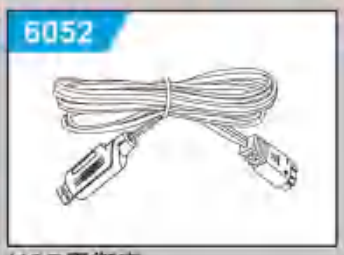

USB平衡充
USB charger

有刷遥控器总成
Brush transmitter

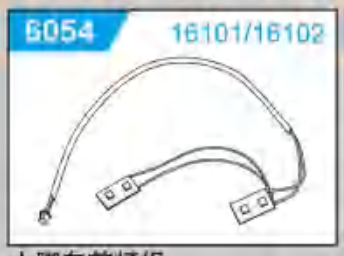

大脚车前灯组
Monster truck headlight assembly

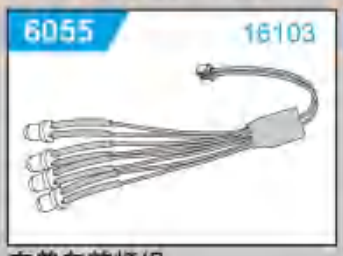

吉普车前灯组
Jeep headlight assembly

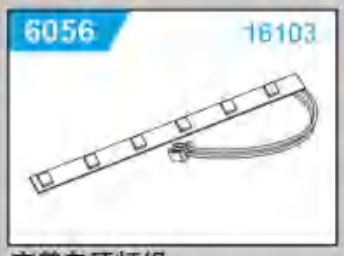

吉普车顶灯组
Jeep roof light assembly

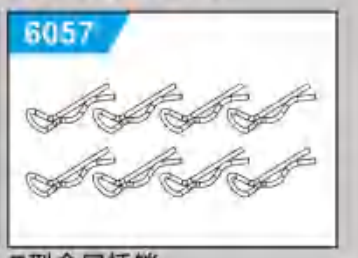

R型金属插销
R Metal clips

法兰螺丝
Flange screw

减震调节扣环
Shock adjustment collar

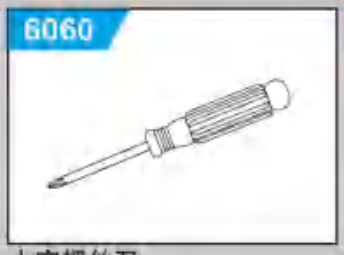

十字螺丝刀
Small screw driver

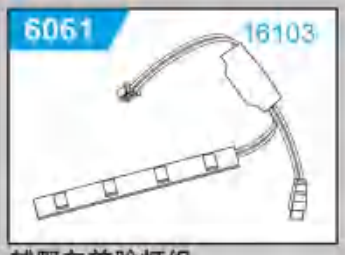

越野车前脸灯组
Off-road vehicle front light assembly

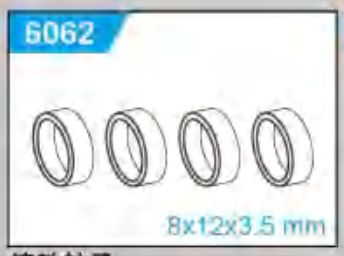

滚珠轴承
Ball bearings

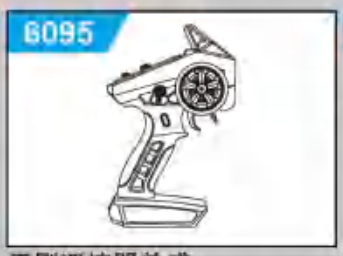

无刷遥控器总成
Brushless transmitter

机丝螺丝
Machine screw

自攻圆头螺丝
Self tapping round head screw

自攻圆头螺丝
Self tapping round head screw

半牙螺丝
Half thread screw

机丝圆头螺丝
Machine round head screw

自攻带介螺丝
Self tapping meson screw

介子螺丝
Meson screw

自攻带介螺丝
Self tapping meson screw

自攻台阶螺丝
Self tapping step screw

十字沉头自攻螺丝
Cross countersunk head self tapping screw

模型车配件表 Spare part list

6111

自攻圆头螺丝
Self tapping round head screw

6112

自攻沉头螺丝
Countersunk self-tapping screw

6114

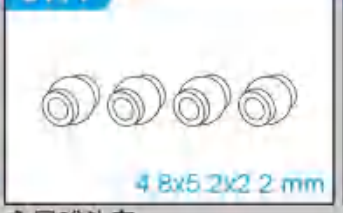

金属球头套
Metal pivot balls

6119

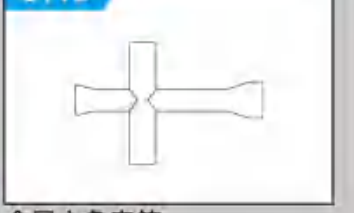

金属六角套筒
Metal hexagon cylinder

6130 16104

车壳支柱组件
Body stanchion

6131 16104

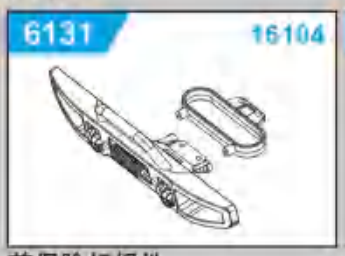

前保险杠组件
Front bumper assembly

6132 16104

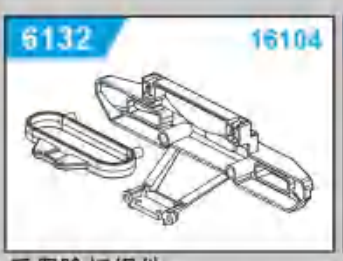

后保险杠组件
Rear bumper assembly

6133 16104

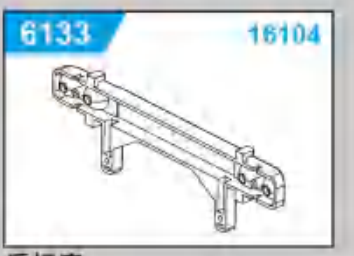

后灯座
Rear lamp holder

6134 16104

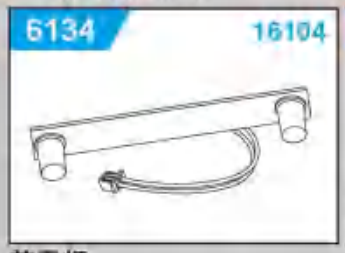

前雾灯
Front fog light

6135 16104

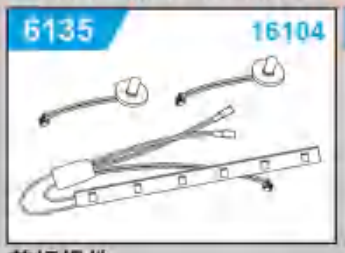

前灯组件
Front light assembly

6136 16104

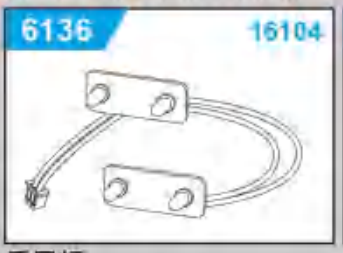

后尾灯
Rear tail light

6137 16104

82MM越野轮胎（印胎纹）
82mm Off-Road Tires (Printed Tread Pattern)

6139 16106

前保险杠组件
Front bumper assembly

6140 16106

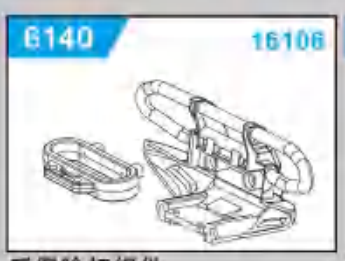

后保险杠组件
Rear bumper assembly

6142 16106

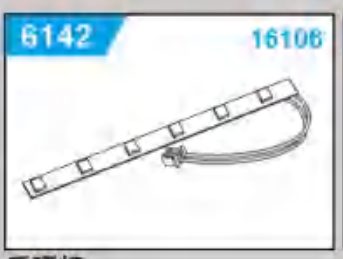

后顶灯
Rear roof light

6143 16106

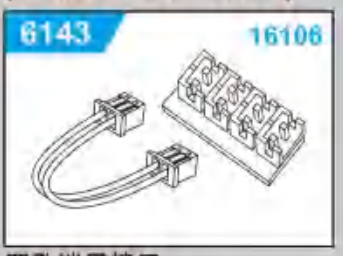

四孔端子接口
Four hole terminal interface

6144 16106

82MM越野轮胎（红圈）
82mm off-road tires (Red rims)

6145 16106

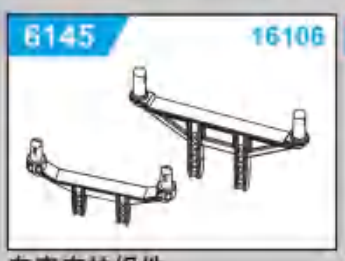

车壳支柱组件
Body support assembly

6146 16106

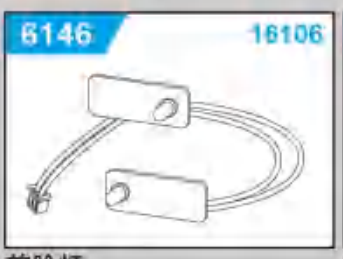

前脸灯
Front headlight

6147 16106

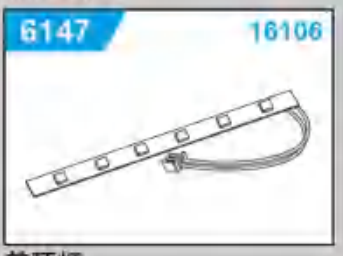

前顶灯
Front roof light

6148

十字圆头机牙螺丝
Cross round head machine tooth screw

6149

十字沉头机牙螺丝
Cross countersunk head machine screw

6150

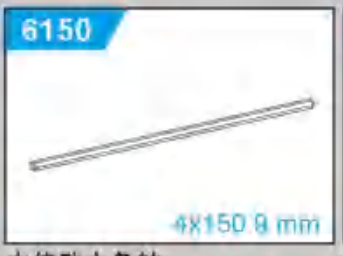

中传动六角轴
Center drive shaft

6166

金属球头套
Metal pivot balls

模型车配件表 Spare part list

6167

十字圆头机牙螺丝
Cross round head machine tooth screw

6199

十字圆头自攻螺丝
Cross round head self tapping screw

6200 16201

车壳(绿色)
Car shell(Green)

6201 16201

车壳(黄色)
Car shell(Yellow)

6203 16201PRO

车壳(红色)
Car shell(Red)

6204 16201PRO

车壳(蓝色)
Car shell(Blue)

6210 16101

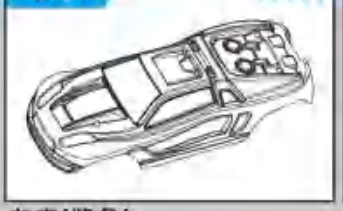

车壳(紫色)
Car shell(Purple)

6212 16101

车壳(蓝色)
Car shell(Blue)

6213 16101PRO

车壳(红色)
Car shell(Red)

6214 16101PRO

车壳(绿色)
Car shell(Green)

6220 16102

车壳(绿色)
Car shell(Green)

6221 16102

车壳(红色)
Car shell(Red)

6223 16102PRO

车壳(蓝色)
Car shell(Blue)

6224 16102PRO

车壳(橙色)
Car shell(Orange)

6230 16103

车壳总成(深灰色)
Car shell assembly (Dark gray)

6231 16103

车壳总成(白色)
Car shell assembly (White)

6233 16103

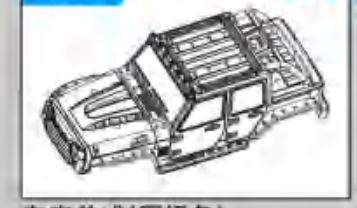

车壳总成(军绿色)
Car shell assembly (Military green)

6235 16103PRO

车壳总成(红色)
Car shell assembly (Red)

6236 16103PRO

车壳总成(蓝色)
Car shell assembly (Blue)

6300

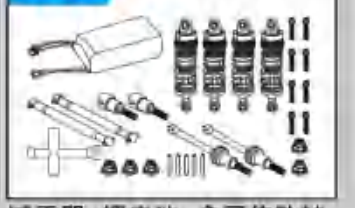

减震器+锂电池+金属传动轴
Shock absorbers+Li-Po battery+Metal transmission shaft

6301

金属液压减震总成
Metal hydraulic shock absorber assembly

6302

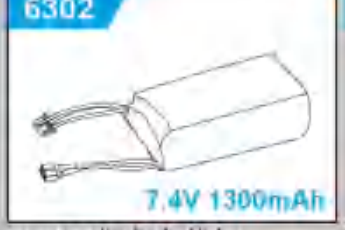

703060锂电池(软包)
703060 Li-Po battery (soft)

6303

金属前一体式CVD传动轴-有刷
Metal front integrative CVD transmission shaft-brush

6304

金属后传动轴-有刷
Metal rear transmission shaft-brush

模型车配件表 Spare part list

6305

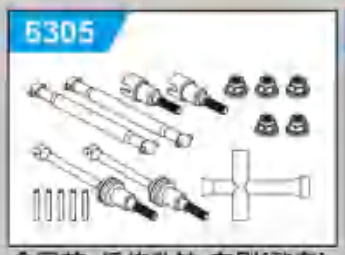

金属前+后传动轴-有刷(整套)
Metal front & rear drive shaft - brushed (complete set)

6306

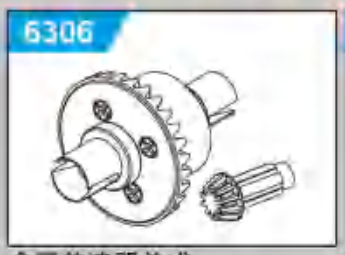

金属差速器总成
Metal components differential

6307

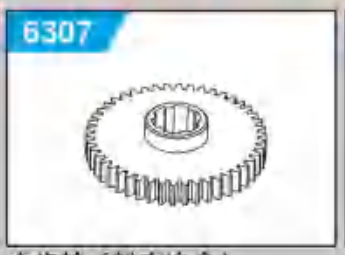

主齿轮（粉末冶金）
Spur gear(Powder metallurgy)

6308

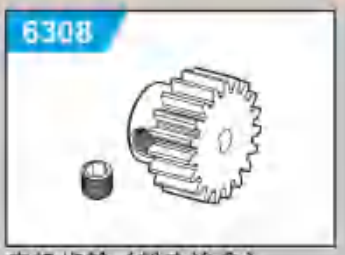

电机齿轮（粉末冶金）
Motor gear(Powder metallurgy)

6309

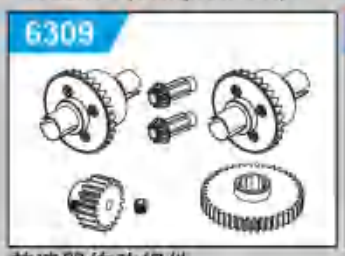

差速器传动组件
Differential drive assembly

6310

金属前一体式CVD传动轴(无刷)
Metal front integrative CVD transmission shaft(Brushless)

6311

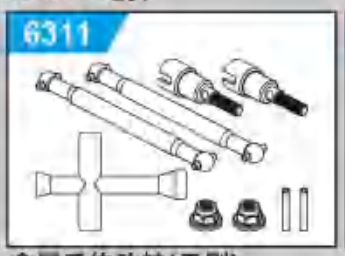

金属后传动轴(无刷)
Metal rear transmission shaft(Brushless)

6312

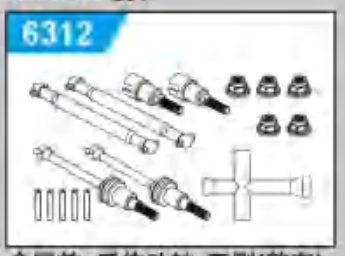

金属前+后传动轴-无刷(整套)
Metal front & rear drive shaft - brushless (complete set)

6313

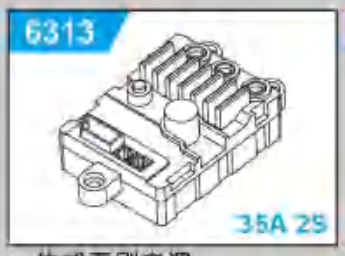

一体式无刷电调
Integrated brushless electric adjustment

6314

2847无刷电机
2847 Brushless motor

6315

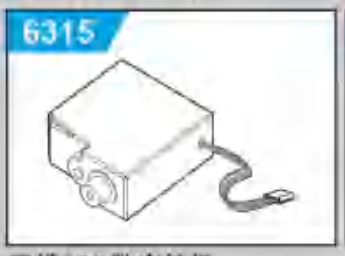

三线17G数字舵机
Three wire 17G digital servo

6316

18650锂离子电池
18650 Li-ion battery

6317

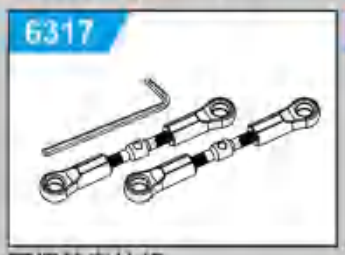

可调转向拉杆
Adjustable steering tie rod

6318

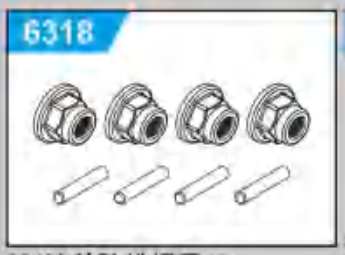

M4法兰防松螺母10
M4 jam nut flange 10

6319

18牙电机座（无刷）
18 tooth motor seat (Brushless)

6320

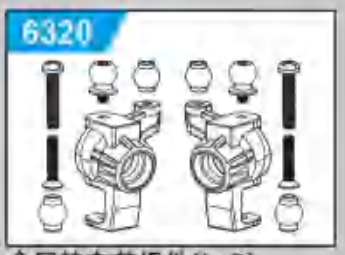

金属转向节组件(L+R)
Metal turn burl assembly (L+R)

6321

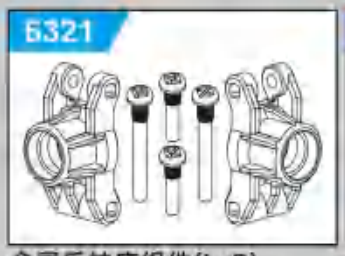

金属后轴座组件(L+R)
Metal rear steering assembly(L+R)

6322

金属减震支架组件(蓝色)
Metal Shock towers assembly(Blue)

6323

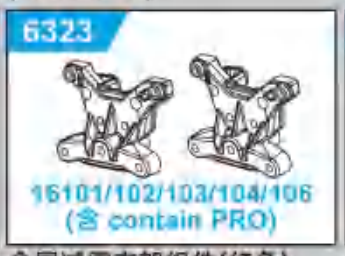

金属减震支架组件(红色)
Metal Shock towers assembly(Red)

6324

沙地轮胎（L+R）
Sand tires (L+R)

6326

金属减震总成(可调)蓝色
Metal shock absorbers (can adjust)blue

6327

金属减震总成(可调)红色
Metal shock absorbers (can adjust)red

6328

金属减震支架组件(蓝色)
Metal Shock towers assembly(Blue)

6329

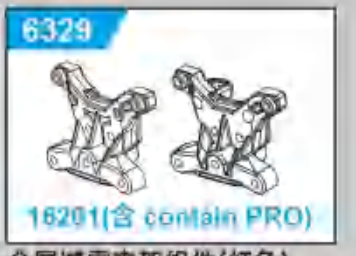

金属减震支架组件(红色)
Metal Shock towers assembly(Red)

模型车配件表 Spare part list

6400 16104

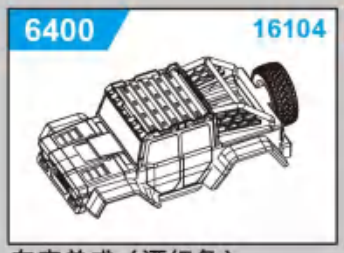

车壳总成（酒红色）
Car shell assembly
(Wine red)

6401 16104

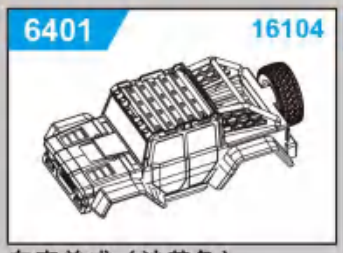

车壳总成（沙黄色）
Car shell assembly
(Sandy yellow)

6401-1 16104PRO

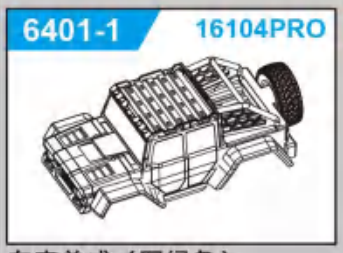

车壳总成（军绿色）
Car shell assembly
(Military green)

6420 16106

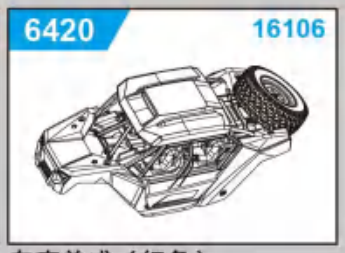

车壳总成（红色）
Car shell assembly
(Red)

6421 16106

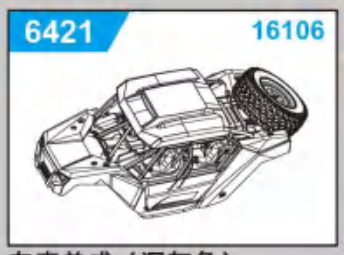

车壳总成（深灰色）
Car shell assembly
(Dark gray)

6422 16106PRO

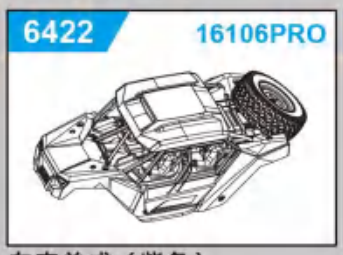

车壳总成（紫色）
Car shell assembly
(Purple)

6423 16106PRO

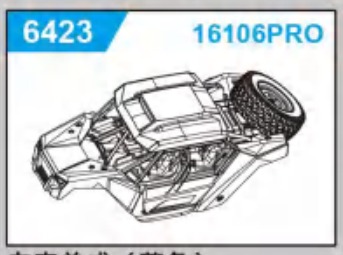

车壳总成（蓝色）
Car shell assembly
(Blue)

8085

自攻圆头螺丝
Self tapping round
head screw