EN

TOPENS®

XD852

Installation Manual

For dual smart swing gate opener installation

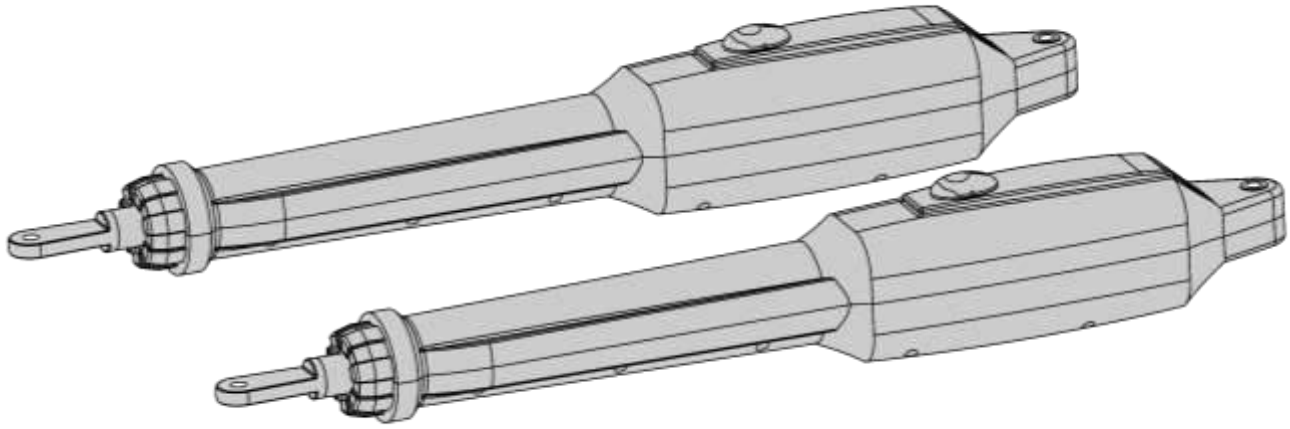

Installation Video

Download “TOPENS” via App Store or Google Play

Coming with UPS01 uninterrupted power supply, the gate opener can be directly powered by 100-240VAC electricity. Additionally, you can use optional batteries (not included) and solar panels (not included) as a backup or main power source with the UPS01.

CE

C030760

VER250427

CONTACT US

For Technical Support and Installation Assistance

Visit our website at www.topens.com and fill out the online form

Alternatively, you can send an email to our service team at support@topens.com

To ensure prompt and effective assistance, kindly include the following information in your email:

- **Where Did You Purchase?** _____
- **Order Information** _____
- **Your Contact Information** _____
- **Gate Information (Weight and Length Per Leaf)** _____
- **Did You Purchase Any Accessories? (If Yes, Please List Them)** _____
- **Issue Description (Include Any Relevant Photo or Video)** _____

For Warranty Registration

To register your warranty, please visit www.topens.com

If you have any questions regarding what is covered by the TOPENS warranty, refer to the detailed policy at www.topens.com/pages/topens-limited-warranty.

Email Us: support@topens.com

Table of Contents

Important Safety Information 1

Packing List 4

Installation Overview 5

Specifications 6

Before You Begin 7

Pull-to-Open Gate Opener Mounting 9

Push-to-Open Gate Opener Mounting 13

Mount Control Box & UPS01 Power Supply 17

Terminal Function of the Control Board 18

Connect the Arm to the Control Board 20

Connection of Power Supply 22

Program the Remote Control 25

Adjust the Limit Switch 27

Setting of the Control Board 28

Stall Force Adjustment & Obstruction Test 38

Connection of Accessories 39

- TC188 Universal Keypad 39
- TKP3 Wireless Keypad 41
- TC173 Wireless Push Button 42
- TC196 Tuya WiFi Remote Control 42
- ET24 Electric Gate Lock 43
- TEW3 Vehicle Sensor Exit Wand 44
- TC175P Wired Keypad 45
- HLR01 Homelink Remote Control Kit 45
- TRF3 Reflection Photocell Sensor 46
- TC102 Infrared Photocell Sensor 47
- ERM12 External Receiver 48

JD24VY Warning Light 48
TC148 Waterproof Wall Push Button & TC147 Wall Push Button 49
Maintenance and Replacement Parts 50
Gate Opener Status Trouble Shooting 51
TOPENS Smart Swing Gate Opener APP User Manual 54
PART 1 Add the Swing Gate Opener to the APP 55
Register a User Account 55
Preparation Before Adding to the APP 55
Add the Swing Gate Opener Via Bluetooth and Hotspot 56
PART 2 Main Interface Introduction 60
Home Interface 60
Store Interface 60
Profile Interface 60
PART 3 Control and Set the Swing Gate Opener 65
Basic Functions of the Controller Interface 65
Settings of the Swing Gate Opener 66
Q&A Interface 70

Important Safety Information

Product Usage

TOPENS gate opener meets all safety requirements for a Class I Residential Vehicular Gate Operator, and is only for use on vehicular access gates, not pedestrian gate applications.

Before Installation

- **GAIN UNDERSTANDING OF THE INSTALLATION PROCESS:** Please read this installation manual before installing the gate opener.
- **LOCAL INSTALLATION COMPLIANCE:** Prior to installation, please verify that your planned installation complies with all relevant local building codes and ordinances. Dispose of packaging materials in accordance with local regulations.
- **SEPARATE PEDESTRIAN ACCESS:** The gate opener is intended for installation only on gates used for vehicles. Pedestrians should use a separate entrance to avoid contact with the moving vehicular gate.

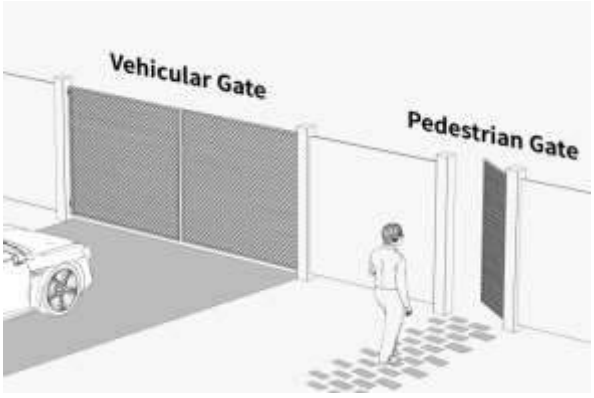

- **SWING GATE PREPARATION:** Do not attach wheels to the gate. Ensure that the gate is plumb, level, and swings freely on its hinges without binding or dragging on the ground. The gate should be mounted to a very stable post or column that is secured in the ground with concrete. If the post's width or diameter is under 15cm (6"), it should be either metal or set in cement. This ensures stability and minimizes the twisting effect caused by gate movement. Repair or replace all worn or damaged gate hardware prior to installation.

- **ENTRAPMENT ZONES ASSESSMENT:** Identify all entrapment zones specific to your installation type. These zones are areas around the automatic gate system where a person or object could be caught that increase the risk of injury. Verify that entrapment areas are clear of potential obstructions before installing the gate opener.

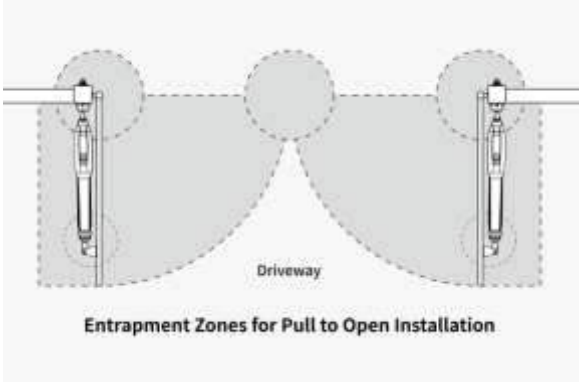

- **AVOID SOLID PANEL GATES:** The gate opener works with various gate types. Solid panel gates have a higher resistance to wind and may result in damage to the gate opener. Therefore, it is not recommended to use the opener with solid surface gates.

Important Safety Information

During Installation

- **INSTALLER AND END USER RESPONSIBILITY:** An experienced installer should perform the installation. Improper installation may result in property damage, severe injury or death. The gate opener is only part of the entire gate operating system, and it is the responsibility of the installer and end user to ensure that the total system is safe for its intended use.
- **DISCONNECT THE POWER SUPPLY:** Ensure that the gate opener is powered off before electrical wire connections or making any adjustments.
- **AVOID ENTRAPMENT ZONES:** Keep children, pets or livestock away from the entrapment zones to avoid the risk of injury or death.
- **INSTALL INSIDE PROPERTY BOUNDARIES:** Install the gate opener on the inside of the property. Do not install outside of the gate where the public has access to it.
- **INSTALL SAFETY SENSOR:** The gate opener is designed to stop and reverse the gate when the gate comes in contact with an obstruction. It is highly recommended to install a photocell sensor in the following situations for safety: if you have children or pets at your property, the gate opener auto close function is set to ON, the gate opener stall force is set to the maximum, a vehicle exit sensor is installed, or other gate control devices are used.
- **GATE CONTROL ACCESSORIES PLACEMENT:** Gate control accessories intended for user activation must be located at least 1.5 meters (5') away from any moving part of the gate and where the user is prevented from reaching over, under, around or through the gate to operate the controls. Outdoor or easily accessible controls shall have a security feature to prevent unauthorized use.

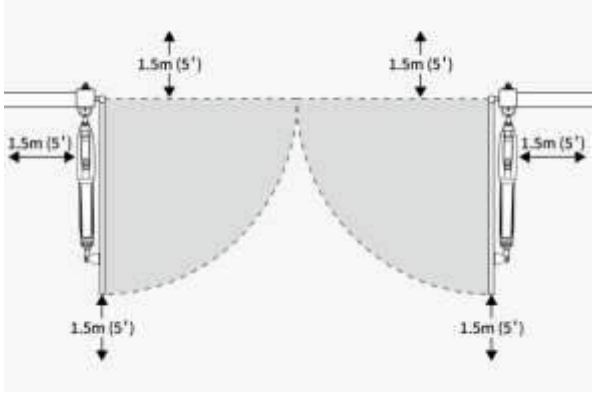

After Installation

- **WARNING SIGNS:** Attach the provided warning signs to both sides of the gate to alert the public about the automatic gate opener system. If your signs are damaged, please reach out to TOPENS Customer Support for replacements.

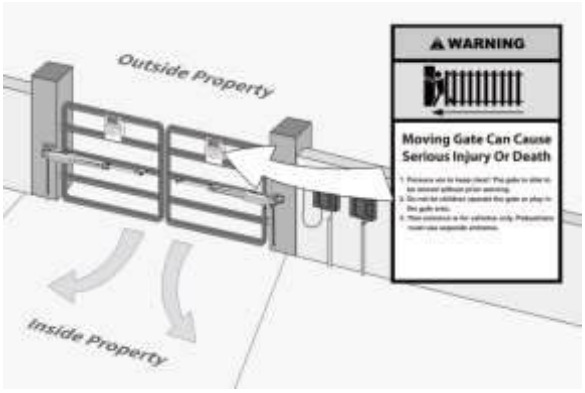

- **AWAY FROM MOVING GATES:** Keep children, pets and livestock away from the gate opener system as moving gates can be dangerous.
- **SECURE GATE CONTROL ACCESSORIES:** Prevent children from operating gate controls by keeping remote transmitters, keypads, and push buttons out of their reach. Store in a secure area when not in use.
- **MAINTENANCE OF GATE OPENER SYSTEM:** Regularly maintain the gate and gate opener system to ensure that the gate swings freely and remains level throughout

its entire swing path. Periodically check your posts, adjusting brackets or tightening hardware as needed. Turn off the power to the gate opener before performing any maintenance.

- **OBSTRUCTION PROTECTION TESTING:** Test the gate opener monthly. The gate must reverse or stop on contact with a rigid object or when an object activates the non-contact sensors. After adjusting the force or limit travel, retest the gate opener. Failure to adjust and retest the gate opener properly can increase the risk of injury or death.
- **POWER DISCONNECTION AND MANUAL OPENING:** Understand how to disconnect the power and manually open the gate. Disconnect the gate opener from the gate only when the gate is not in motion and the gate opener system is turned off.
- **RECOGNIZE POTENTIAL RISKS IN AUTOMATED GATE SYSTEMS:** Save the installation manual. Make sure everyone who is using or will be around the gate and gate opener are aware of the dangers of automated gate systems. If a replacement manual is needed, you can download a copy from the TOPENS website (www.topens.com).

Note For Warranty

- **WARRANTY LIMITED TO TARGET MARKET:** The warranty is limited to the target market (Contiguous United States, Canada, UK, and Germany). Customers using the product outside these regions will be responsible for any additional expenses during the warranty replacement process.
- **GATE OPENER ABUSE:** TOPENS does not cover damage resulting from abuse, such as attempting to operate the gate opener beyond its specified capacity or using it for unintended purposes.
- **GATE OPENER MISUSE:** TOPENS does not cover damage resulting from misuse, including but not limited to operating the gate opener with incompatible power sources or using it in environments not recommended by TOPENS.
- **ALTERATIONS OR MODIFICATIONS:** Alterations or modifications made to the gate opener without prior consultation with TOPENS will also invalidate warranty coverage.
- **NON-COMPLIANCE WITH INSTRUCTIONS:** Failure to follow the installation instructions, including but not limited to improper installation, maintenance will void the warranty.
- **THIRD PARTY ACCESSORIES:** TOPENS does not cover damage caused by third party accessories, except those specifically recommended by TOPENS Customer Support. It is important to use only compatible accessories to ensure compatibility and prevent damage to the gate opener.
- **CONTACT TOPENS SUPPORT:** Please ensure that the gate opener is installed, operated, and maintained in accordance with the guidelines outlined in the installation manual to avoid voiding the warranty. If you have any questions regarding proper usage or need assistance with compatible accessories, please contact TOPENS Customer Support for guidance.
- **DETAILED WARRANTY POLICY:** If you have any questions regarding what is covered by the TOPENS warranty, refer to the policy at www.topens.com/pages/topens-limited-warranty.

Packing List

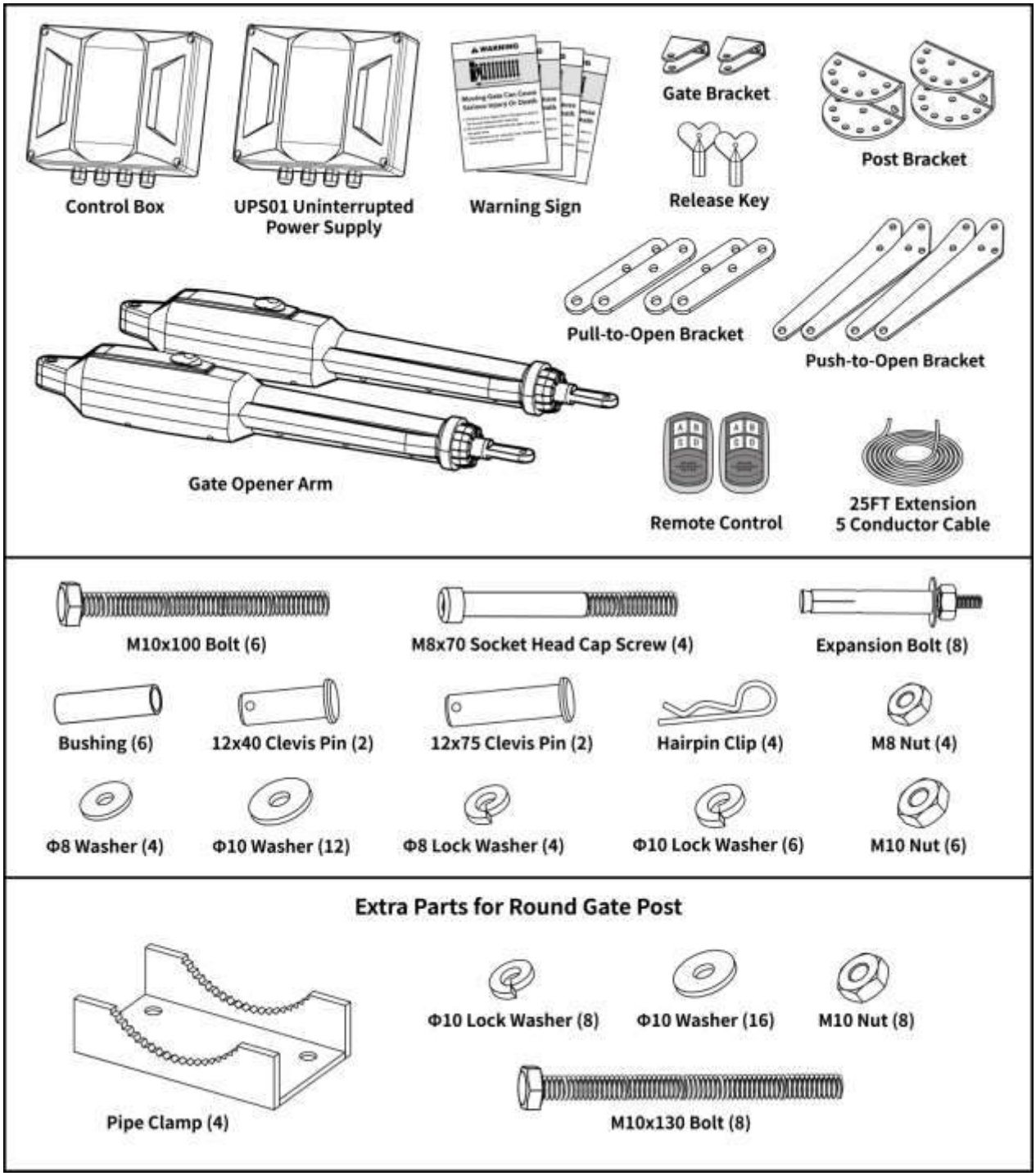

Safety Accessories

(Included in Specific Models, Check the Actual Package)

JD24VY
Warning Light

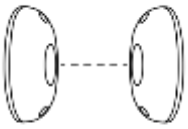

TC102 Infrared
Photocell Sensor

Compatible Solar Panels

(Sold Separately)

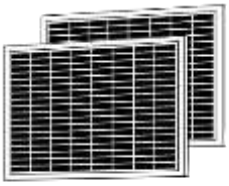

TSQ20W 20W
Solar Panel Kit

Installation Overview

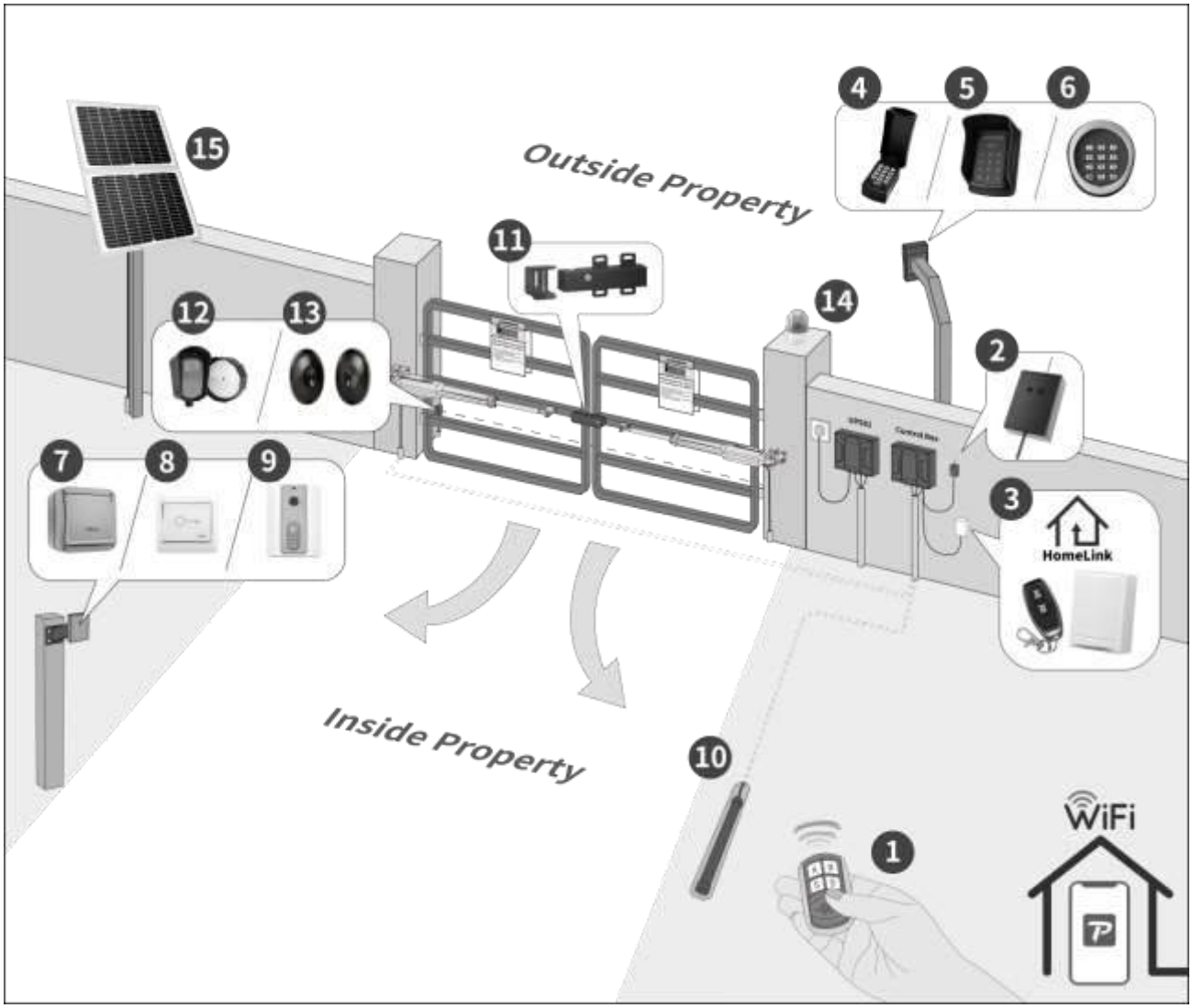

Example of Pull-to-Open Installation

Various TOPENS Accessories for Your Gate Opener System	
❶ TC131 Remote Control	❾ TC173 Wireless Push Button
❷ ERM12 External Receiver	❿ TEW3 Vehicle Sensor Exit Wand
❸ HLR01 Homelink Remote Control Kit	⓫ ET24 Electric Gate Lock
❹ TC188 Universal Keypad	⓬ TRF3 Reflection Photocell Sensor
❺ TC175P Wired Keypad	⓭ TC102 Infrared Photocell Sensor
❻ TKP3 Wireless Keypad	⓮ JD24VY Warning Light
❼ TC148 Waterproof Wall Push Button	⓯ TSQ20W 20W Solar Panel Kit
❽ TC147 Wall Push Button	

** Available on the TOPENS website (www.topens.com) and Amazon.*

Specifications

Product Model	XD852
Power Input	100-240V ~ 50/60Hz
Motor Voltage	24VDC
Rated Current of the Motor	3A
Motor Power	80W
Gate Opening / Closing Time	15 seconds (ideal condition)
Gate Opening / Closing Speed	20mm/s (0.8 in/s)
Max Travel Range	360mm (14.2 in)
Working Temperature	-20°C ~ +50°C (0°F to 120°F)
Protection Class	IP44 Waterproof

Max Gate Weight and Gate Length Per Arm

NOTE: Ball bearing hinges should be used on all gates weighing over 140kg (300lbs) per leaf.

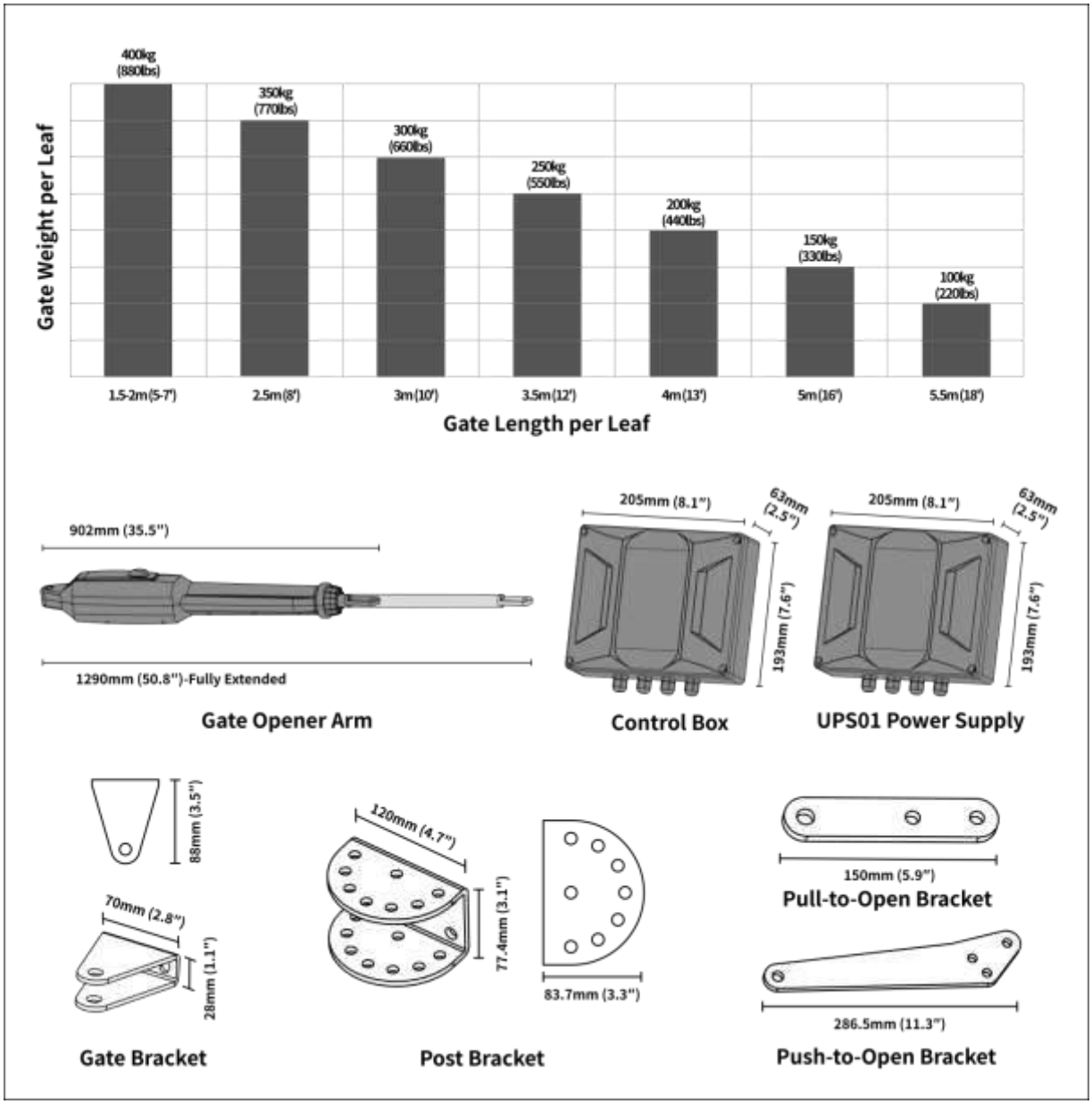

Before You Begin

Check the Gate

- Ensure that the gate is plumb, level, and swings freely on its hinges without binding or dragging on the ground.
- The gate should be mounted to a very stable post or column that is secured in the ground with concrete.
- Repair or replace all worn or damaged gate hardware prior to installation.

Test the Wi-Fi Signal Strength

- Make sure your smartphone is connected to your Wi-Fi network. Hold your smartphone at the location where your gate opener will be installed and check the Wi-Fi signal strength.
- Please ensure that your Wi-Fi is set to 2.4GHz mode, as 5GHz is not supported.
- If there is no Wi-Fi signal or the signal is weak near the gate opener, move your router closer to the gate opener to reduce interference from walls and other objects, or consider using a Wi-Fi range extender.

Tools Needed

- Power Drill
- Wire Strippers
- Level
- Phillips Screwdriver
- Tape Measure
- C-Clamps - small, medium, and large
- Hacksaw or Heavy Duty Bolt Cutters
- Open End Wrenches - 14# &17# or Adjustable Wrenches

Items Not Included but May Needed

- **Battery and Solar Panel:** If you choose to use batteries and solar panels as main power source or use batteries as back-up power source, you'll require 24V 12Ah battery (NOT included). Marine / automotive type battery or lead acid / GEL / AGM / flooded (deep cycle battery) batteries are supported, EXCEPT for lithium-ion battery. The batteries should be waterproof, or they should be placed in waterproof housing. TOPENS solar panel kit is available for separate purchase.
- **PVC Conduit:** Required to protect the extension cable connecting the slave arm to the control board and the cable connecting TC102 infrared photocell sensor to the control board.
- **Connection Cable:** Connection cable may be required for installing wired accessories. Refer to the Connection of Accessories section in this manual to purchase the correct cable.
- **Weatherproof Cover:** Use a weatherproof cover to protect the electrical outlet if it is located outdoors.
- **Surge Protector:** A surge protector with a rated current of 5A is recommended to use with the UPS01 power supply.

Install Electric Gate Lock

- In windy areas, it is crucial to use an electric gate lock to ensure the gate remains securely closed and to prevent damage or malfunction caused by strong winds.

Install Photocell Sensor

- It is highly recommended to install a photocell sensor in the following situations for safety: if you have children or pets at your property, the gate opener auto close function is set to ON, the gate opener stall force is set to the maximum, a vehicle exit sensor is installed, or other gate control devices are used.

Before You Begin

Additional Hardware to Enhance Post Bracket Stability

- For a round gate post, the diameter should be 8cm (3") or less. Use pipe clamps to connect the post bracket to the gate post.
- For a square gate post, the width should be at least 12cm (5").
- Add metal plate or larger washer between the bolt and the wooden post to improve bracket stability.
- For concrete post, use expansion bolts to securely mount the bracket.
- If the post's width or diameter is under 15cm (6"), it should be either metal or set in cement.

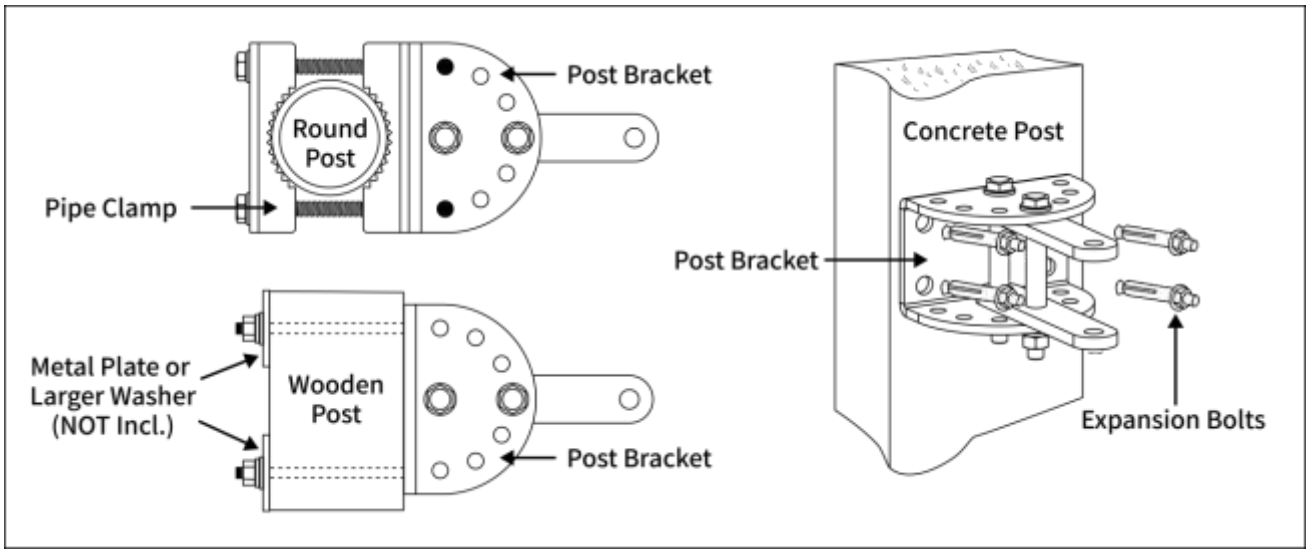

Check Gate Swing Direction

- Each gate is unique and the following steps outline common installation process.
- Please ensure that the PULL/PUSH TO OPEN setting on the control board matches the installation type.

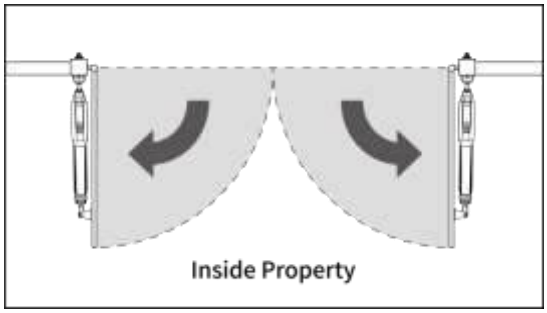

Pull-to-Open Installation Starts from Page 9

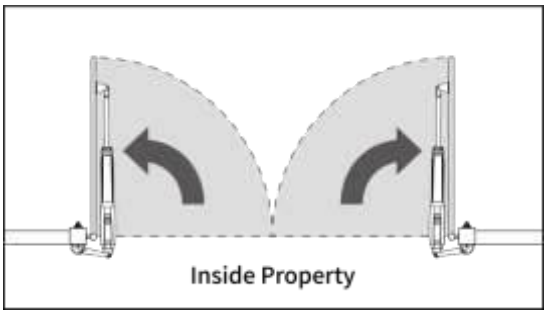

Push-to-Open Installation Starts from Page 13

NOTE: *Improper installation may result in property damage, severe injury, and / or death.*

Pull-to-Open Gate Opener Mounting

STEP 1

Assemble the Post Bracket and the Pull-to-Open Bracket

- Place two bushings between the pull-to-open brackets. Insert two M10 x 100 bolts through the holes of post bracket and two pull-to-open brackets. Fasten with washer and nut as shown.
- DO NOT over tighten the nut because the post bracket may need to be adjusted later.

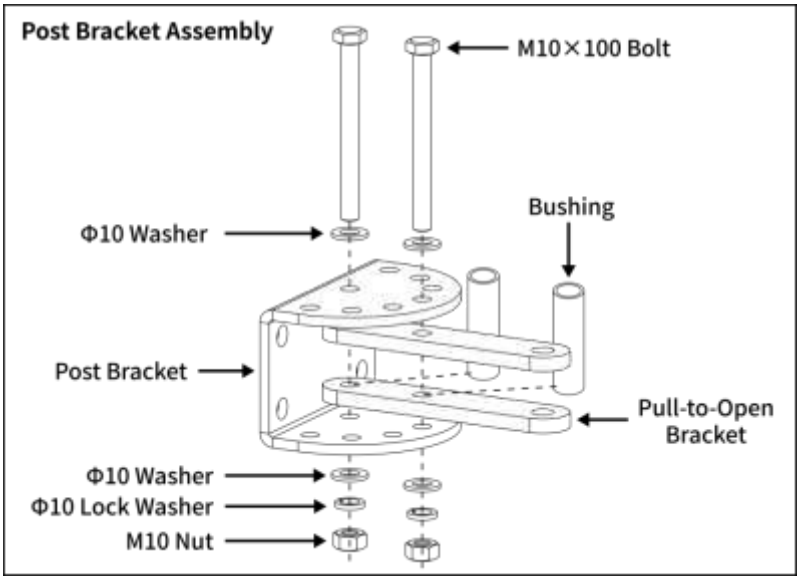

STEP 2

Determine the Position of the Post Bracket Assembly

- The table shows the maximum opening angle of the gate based on the dimensions of A and B. For example, if A is 16cm (6.3") and B is 14cm (5.5"), the maximum opening angle of the gate is 108°.
- Measure the dimension of A and B to determine the desired gate opening angle, and then mark the center of the mounting locations for the post bracket accordingly.
- ***Pull-to-Open Installation — Gate in open position with the moving rod fully retracted.***

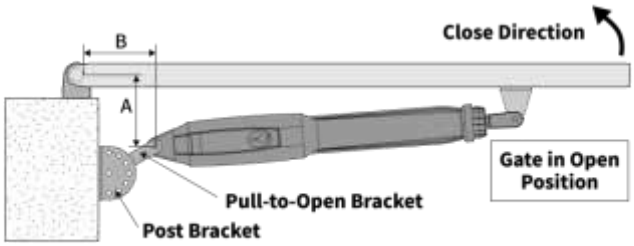

B \ A	12cm (4.7")	14cm (5.5")	16cm (6.3")	18cm (7.1")	20cm (7.9")	22cm (8.7")	24cm (9.4")	26cm (10.2")
12cm (4.7")	96°	102°	111°	113°	103°	97°	93°	89°
14cm (5.5")	95 °	101°	108°	104°	97°	92°	88°	85°
16cm (6.3")	94°	101°	106°	97°	91°	87°	84°	81°
18cm (7.1")	93°	100°	97°	90°	86°	82°	80°	78°
20cm (7.9")	92°	97°	89°	85°	81°	78°	76°	74°
22cm (8.7")	91°	88°	83°	79°	76°	74°	73°	71°
24cm (9.4")	87°	81°	77°	75°	72°	71°	69°	68°
26cm (10.2")	79°	75°	72°	70°	69°	67°	66°	65°

Pull-to-Open Gate Opener Mounting

STEP 3

Attach the Brackets to the Gate Opener Arm

- Attach the post bracket assembly and the gate bracket to the gate opener arm by inserting a clevis pin.
- Secure the clevis pin using the hairpin clip.

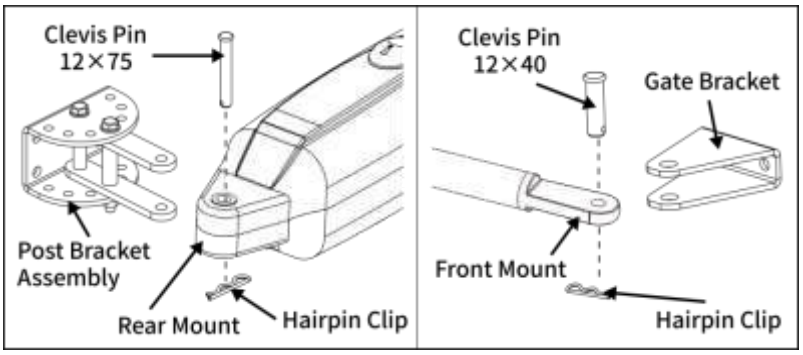

STEP 4

Release the Clutch

- Open the release hole on the top of the gate opener.
- Insert the manual release key, and turn it 90° clockwise.
- The gate opener is now in manual mode, allowing for manual extension and retraction of the moving rod.

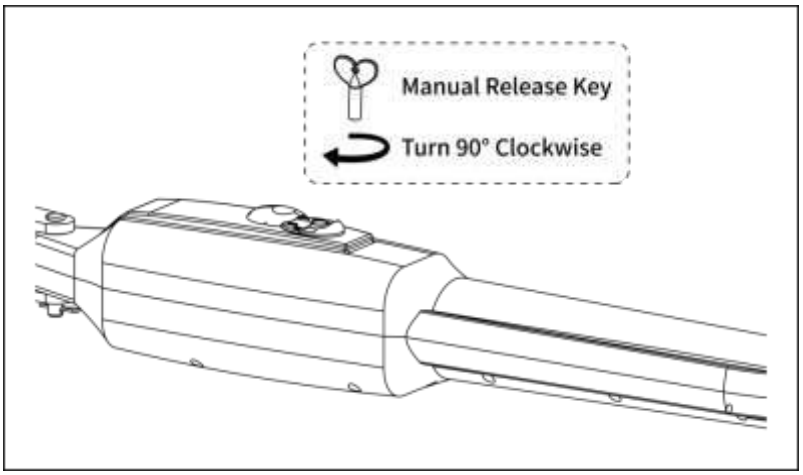

STEP 5

Position the Gate Opener on the Gate

- Clamp the gate opener arm along with the post bracket assembly to the marked position on the gate post.
- Make sure that the gate opener arm is fully retracted and the gate is fully opened to the desired position.
- Put a level on the arm, then use a C-clamp to secure the gate bracket onto the gate when the arm is level.

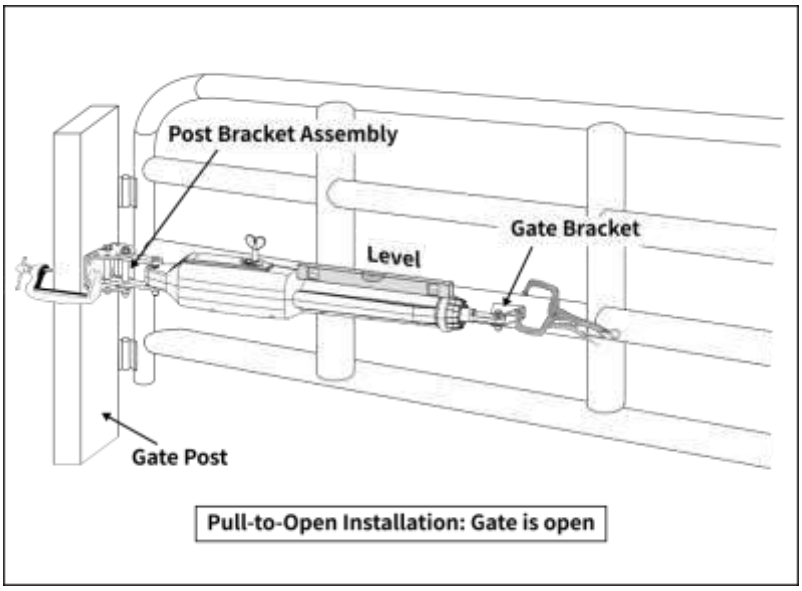

STEP 6

Test Gate Travel and Mark the Brackets Mounting Locations

- Manually open and close the gate to ensure that the gate bracket position is correct.
- Ensure that there is a minimum clearance of 2.5cm (1") between the gate and the opener.
- Make sure that the gate opener does not bind against the pull-to-open bracket.
- If the clearance is less than 2.5cm (1"), or if the gate opener and the pull-to-open bracket are binding, rotate the pull-to-open bracket and/or move the post bracket assembly.
- Mark the center of the mounting locations for the brackets.

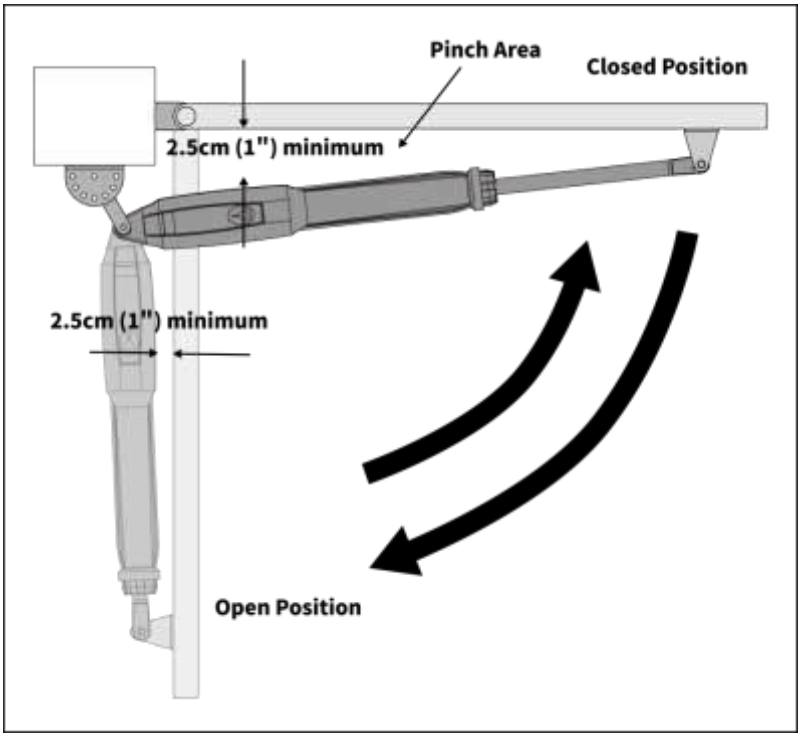

STEP 7

Drill Bracket Mounting Holes

- Remove the C-clamps and the gate opener arm.
- Drill 14mm (0.55") diameter holes through the post and 8.5mm (0.33") diameter holes through the gate at the marked locations.

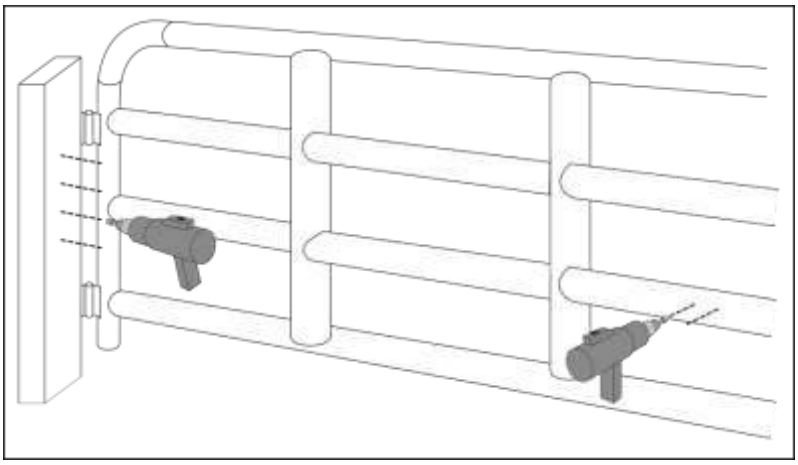

Pull-to-Open Gate Opener Mounting

STEP 8

Secure the Post Bracket

- Secure the post bracket assembly to the gate post by inserting expansion bolts through the post bracket assembly and the drilled holes in the gate post.

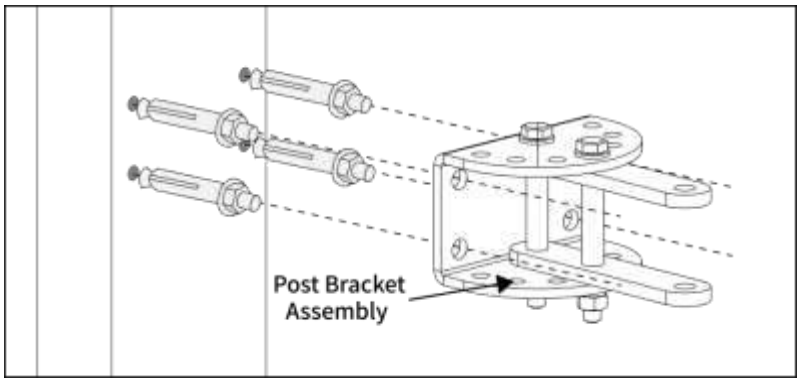

STEP 9

Secure the Gate Bracket

- Secure the gate bracket to the gate by inserting two M8 x 70 socket head cap screws through the gate bracket and the drilled holes in the gate.
- Tighten each socket head cap screw using one ¢8 washer, one ¢ 8 lock washer, and one ¢8 nut. Cut off the bolts that extend beyond the tightened nuts.

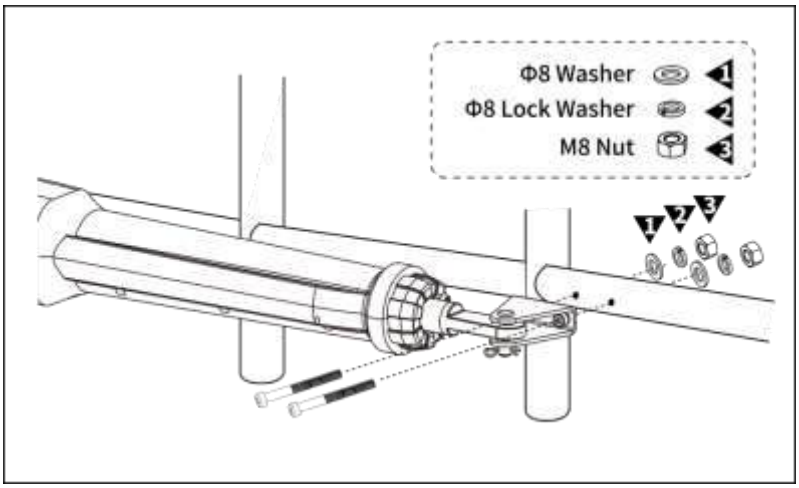

STEP 10

Turn Back the Clutch

- Manually move the gate to verify that if the installation is appropriate.
- Turn the release key 90 ° counterclockwise.

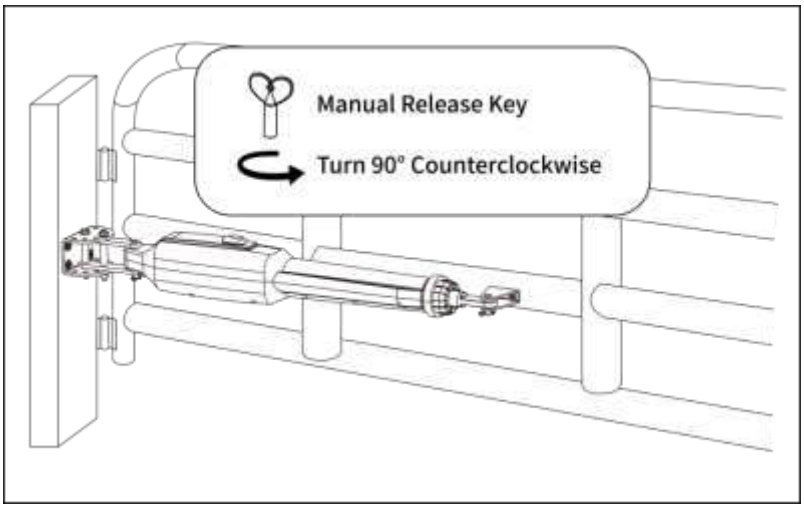

NOTE: *Please ensure that the PULL/PUSH TO OPEN setting on the control board matches the installation type.*

Push-to-Open Gate Opener Mounting

STEP 1

Assemble the Post Bracket and the Push-to-Open Bracket

- Place three bushings between the push-to-open brackets. Insert three M10 x 100 bolts through the holes of post bracket and two push-to-open brackets. Fasten with washer and nut as shown.
- DO NOT over tighten the nut because the post bracket may need to be adjusted later.

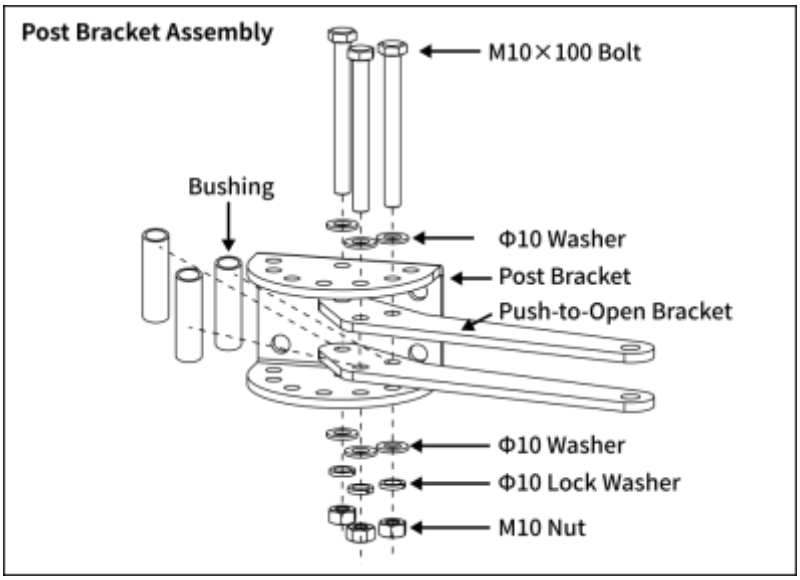

STEP 2

Determine the Position of the Post Bracket Assembly

- The table shows the maximum opening angle of the gate based on the dimensions of A and B. For example, if A is 14cm (5.5") and B is 16cm (6.3"), the maximum opening angle of the gate is 100°.
- Measure the dimension of A and B to determine the desired gate opening angle, and then mark the center of the mounting locations for the post bracket accordingly.
- ***Push-to-Open Installation — Gate in closed position with the moving rod fully retracted.***

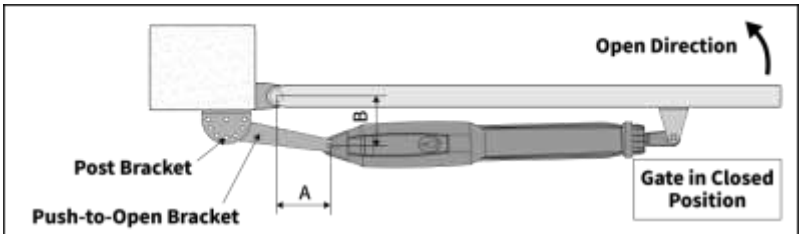

B \ A	14cm (5.5")	12cm (4.7")
12cm (4.7")	99°	96°
14cm (5.5")	99°	95°
16cm (6.3")	100°	95°
18cm (7.1")	100°	94°
20cm (7.9")	99°	94°
22cm (8.7")	94°	94°
24cm (9.4")	86°	93°
26cm (10.2")	80°	88°
28cm (11")	75°	81°

STEP 3

Attach the Brackets to the Gate Opener Arm

- Attach the post bracket assembly and the gate bracket to the arm by inserting a clevis pin.
- Secure the clevis pin using the hairpin clip.

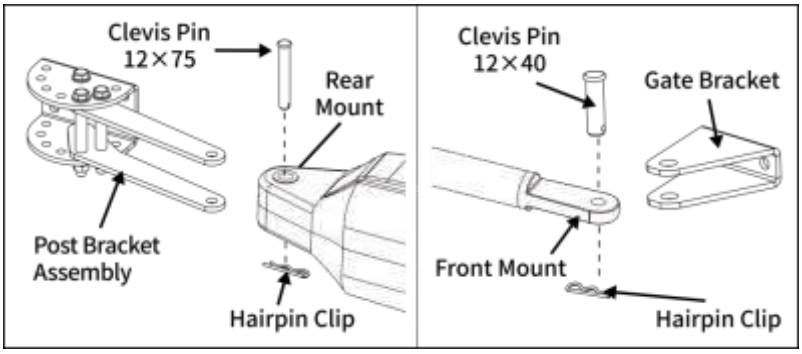

STEP 4

Release the Clutch

- Open the release hole on the top of the gate opener.
- Insert the manual release key, and turn it 90° clockwise.
- The gate opener is now in manual mode, allowing for manual extension and retraction of the moving rod.

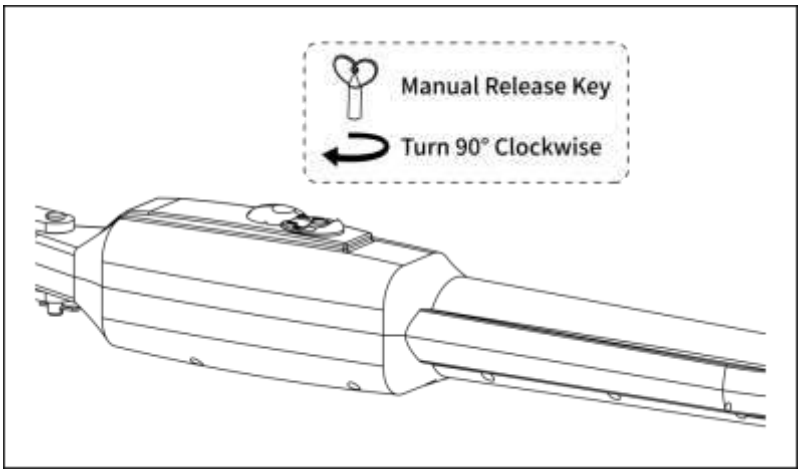

STEP 5

Position the Gate Opener on the Gate

- Clamp the gate opener arm along with the post bracket assembly to the marked position on the gate post.
- Make sure that the gate opener is fully retracted and the gate is fully closed to the desired position.
- Put a level on the arm, then use a C-clamp to secure the gate bracket onto the gate when the arm is level.

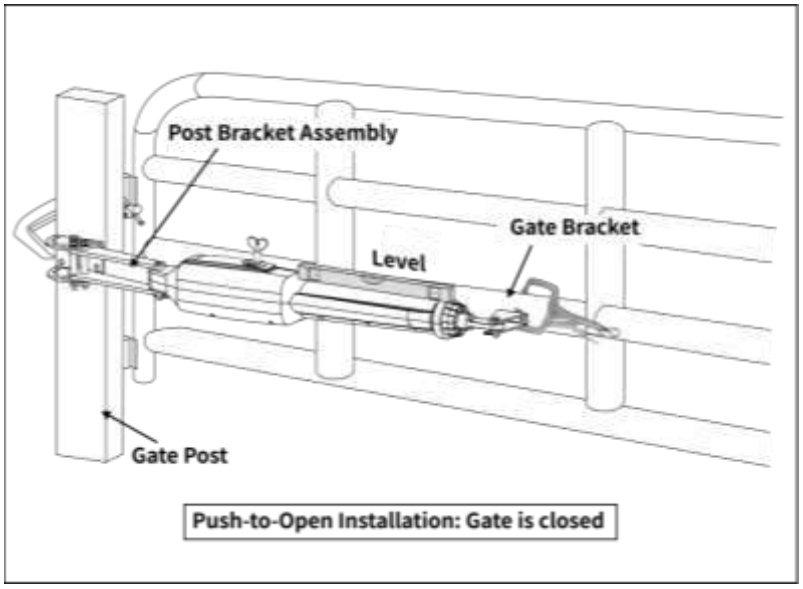

STEP 6

Test Gate Travel and Mark the Brackets Mounting Locations

- Manually open and close the gate to ensure that the gate bracket position is correct.
- Ensure that there is a minimum clearance of 2.5cm (1") between the gate and the opener.
- Make sure that the gate opener does not bind against the push-to-open bracket.
- If the clearance is less than 2.5cm (1"), or if the gate opener and the push-to-open bracket are binding, rotate the push-to-open bracket and/or move the post bracket assembly.
- Mark the center of the mounting locations for the brackets.

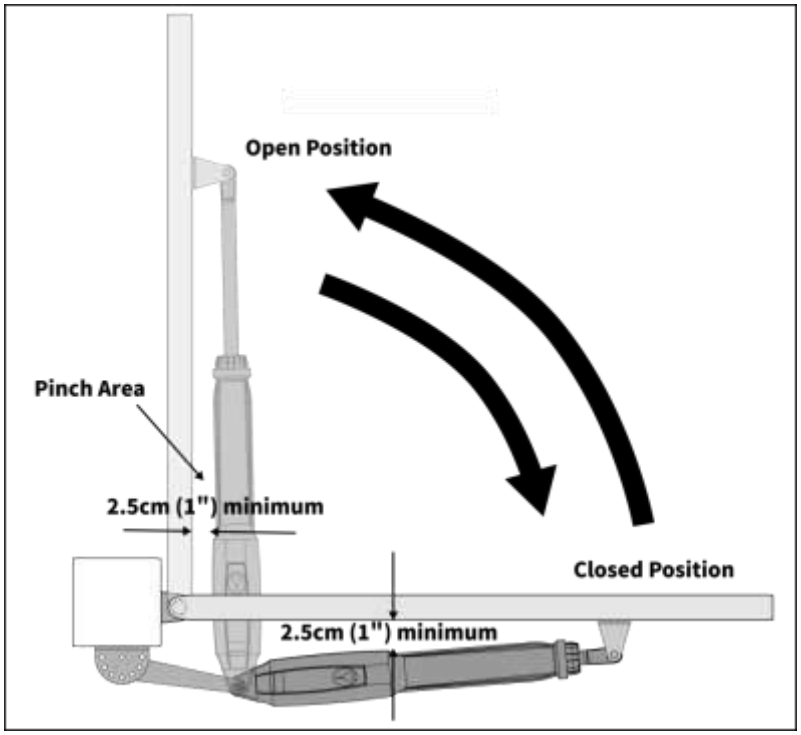

STEP 7

Drill Bracket Mounting Holes

- Remove the C-clamps and the gate opener arm.
- Drill 14mm (0.55") diameter holes through the post and 8.5mm (0.33") diameter holes through the gate at the marked locations.

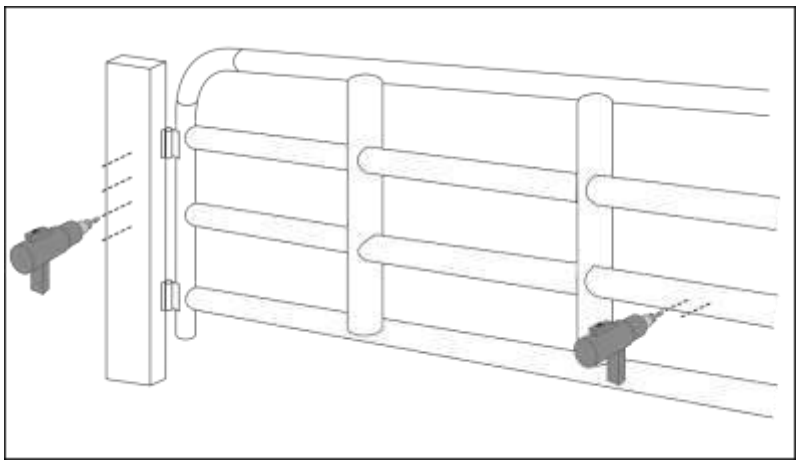

Push-to-Open Gate Opener Mounting

STEP 8

Secure the Post Bracket

- Secure the post bracket assembly to the gate post by inserting expansion bolts through the post bracket assembly and the drilled holes in the gate post.

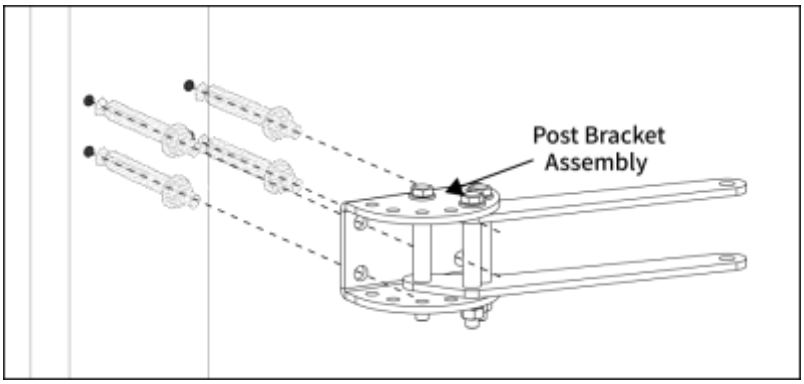

STEP 9

Secure the Gate Bracket

- Secure the gate bracket to the gate by inserting two M8 x 70 socket head cap screws through the gate bracket and the drilled holes in the gate.
- Tighten each socket head cap screw using one ¢8 washer, one ¢ 8 lock washer, and one ¢8 nut. Cut off the bolts that extend beyond the tightened nuts.

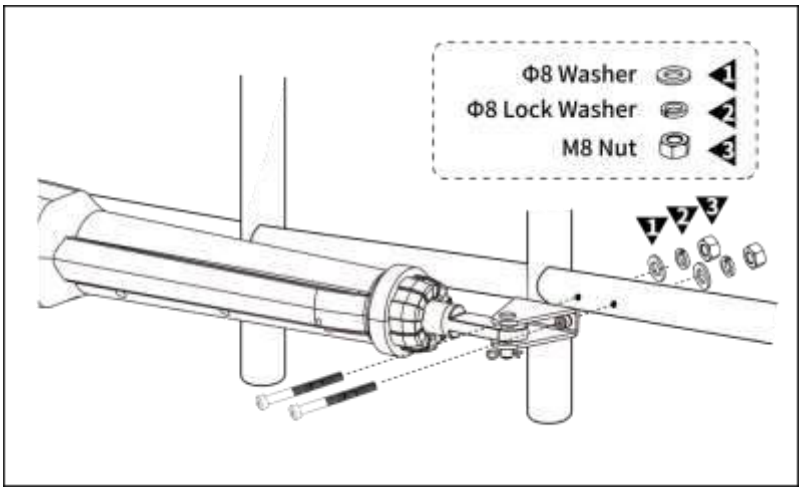

STEP 10

Turn Back the Clutch

- Manually move the gate to verify that if the installation is appropriate.
- Turn the release key 90 ° counterclockwise.

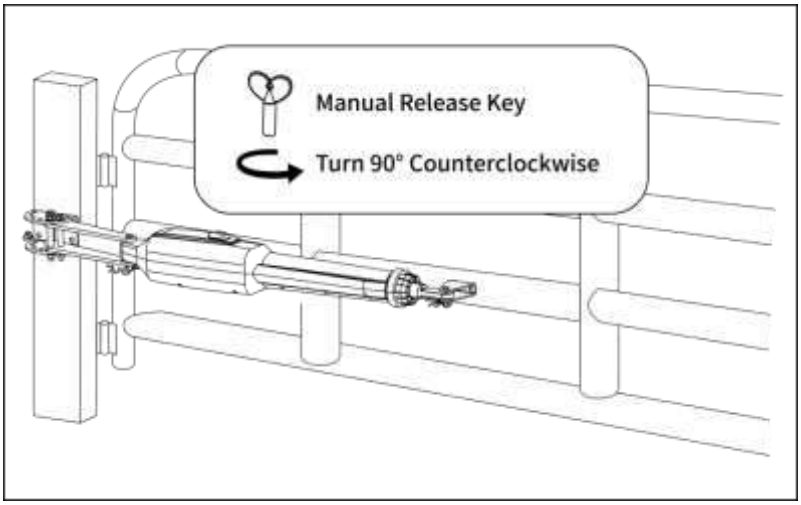

NOTE: *Please ensure that the PULL/PUSH TO OPEN setting on the control board matches the installation type.*

Mount Control Box & UPS01 Power Supply

STEP 1

- Identify a suitable mounting location for the control box at least 1m (3.3ft.) above the ground and no more than 10m (33ft.) from the gate opener arm to prevent it from being flooded or buried under snow.
- Mount the UPS01 power supply next to the control box.

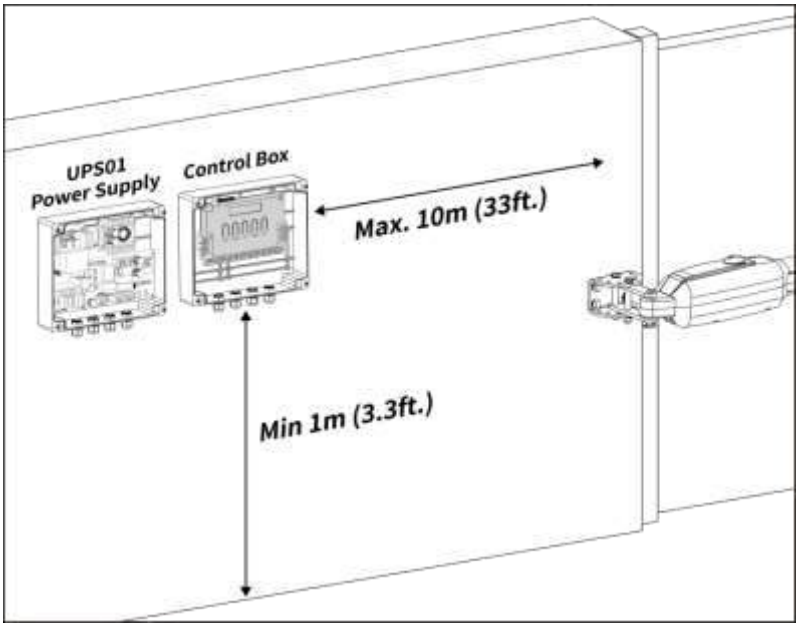

STEP 2

- Secure the control box and UPS01 power supply using deck screws (NOT included).
- Use expansion tubes (NOT included) if mounting to a wall.

CAUTION: *Make sure that the cable outlet hole is facing downward for proper drainage.*

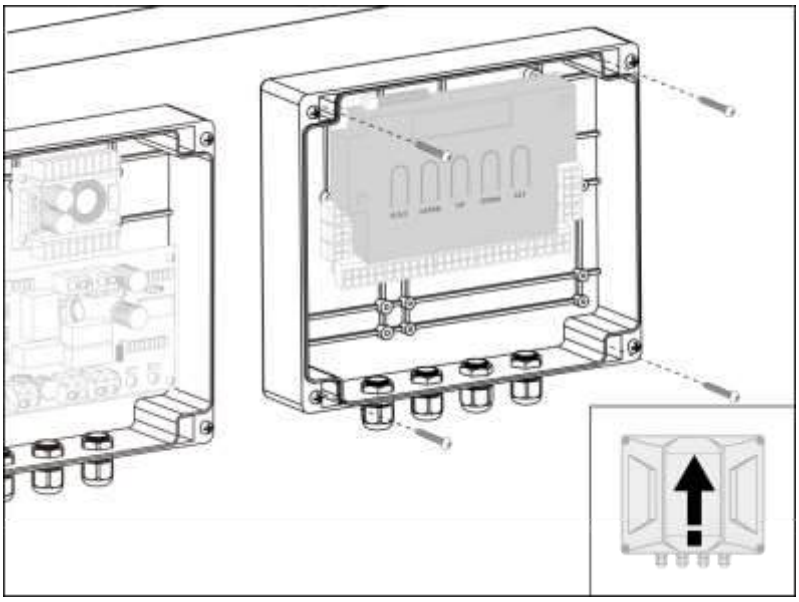

Terminal Function of the Control Board

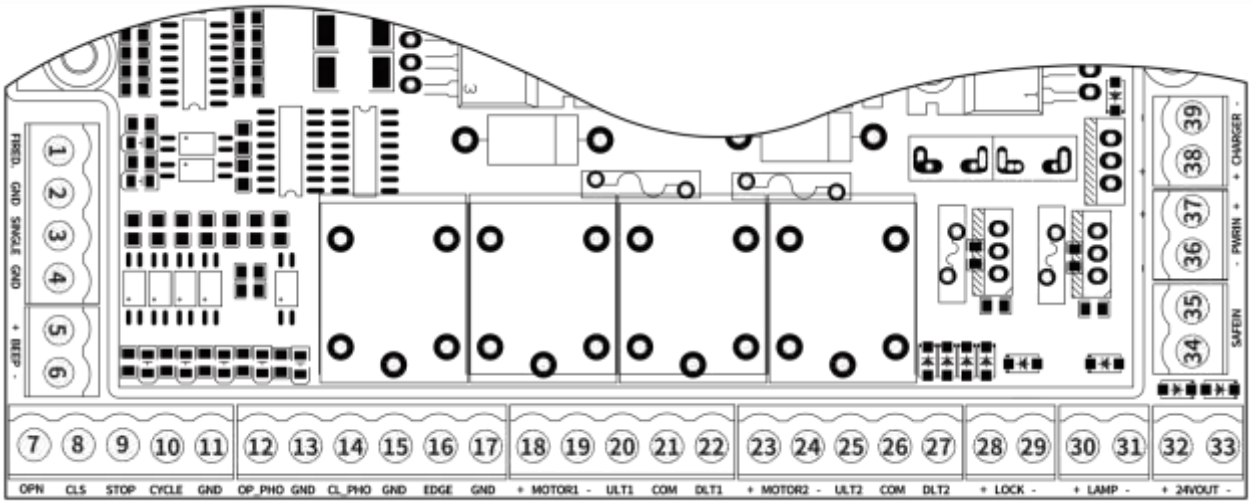

Terminal	Function
① "FireD." ② "GND"	Connect to a normally open fire access switch, when the fire access switch is turned on, the gate opener will automatically open and stay in the open position for emergency access
③ "SINGLE" ④ "GND"	Control master gate operation through a normally open dry contact signal input, commonly connected to push button for cyclic gate operation (open/stop/close/stop)
⑤⑥ "+BEEP-"	Output terminals for audio alarm buzzer. Connect the positive terminal of the buzzer to terminal "+BEEP" and the negative terminal of the buzzer to terminal "BEEP-". Ensure that the buzzer with a rated voltage of 24VDC and a rated current of less than 20mA
⑦ "OPN" ⑪ "GND"	Control gate operation through a normally open dry contact signal input, typically connected to a push button to open the gate
⑧ "CLS" ⑪ "GND"	Control gate operation through a normally open dry contact signal input, typically connected to a push button to close the gate
⑨ "STOP" ⑪ "GND"	Control gate operation through a normally open dry contact signal input, typically connected to a push button to stop the gate
⑩ "CYCLE" ⑪ "GND"	Control gate operation through a normally open dry contact signal input, commonly connected to push button, wired keypad, and external receiver for cyclic gate operation (open/stop/close/stop)
⑫ "OP_PHO" ⑬ "GND"	Receive signal input from a photocell sensor for open protection, operating on a normally closed (NC) input basis, connected to "NC" and "COM" terminals of the sensor respectively
⑭ "CL_PHO" ⑮ "GND"	Receive signal input from a photocell sensor for close protection, operating on a normally closed (NC) input basis, connected to "NC" and "COM" terminals of the sensor respectively
⑯ "EDGE" ⑰ "GND"	Receive signal input from an edge sensor and operate on a normally closed (NC) input basis
⑱⑲ "+MOTOR1-"	Connect to the red and black wires of the master arm
㉓㉔ "+MOTOR2-"	Connect to the red and black wires of the slave arm

Terminal Function of the Control Board

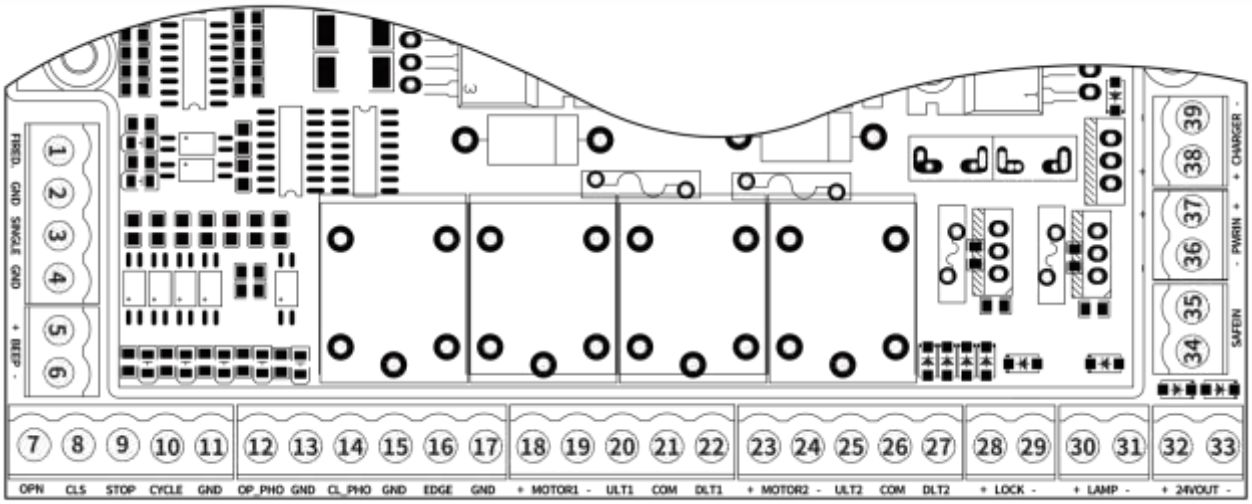

Terminal	Function
⑳ "ULT1" ㉑ "COM" ㉒ "DLT1"	Input terminals for master arm limit switches, the near end limit switch connected to "ULT1" and "COM", the far end limit switch connected to "DLT1" and "COM"
㉕ "ULT2" ㉖ "COM" ㉗ "DLT2"	Input terminals for slave arm limit switches, the near end limit switch connected to "ULT2" and "COM", the far end limit switch connected to "DLT2" and "COM"
㉘㉙ "+LOCK-"	Output terminals for swing gate lock, directly connected to the positive and negative wires of the lock. The terminals can be configured to support either an electric lock or an electromagnetic lock. The lock must operate at a rated voltage of 24VDC and a rated current of less than 3A. Ensure the electric lock is a fail-secure type, while the electromagnetic lock must be a fail-safe type
㉚㉛ "+LAMP-"	Output terminals for a warning light, connected to the positive and negative wires of the warning light. Provide 24VDC voltage output while the gate opener is in operation. Ensure that the warning light has a rated voltage of 24VDC and a rated current of less than 1A
㉜㉝ "+24VOUT-"	Provide 24VDC voltage output to power photocell sensors while the gate opener is in operation
㉞㉟ "SAFEIN"	Connect to a power switch to turn on/off the power to the gate opener. Ensure that the power switch has a rated voltage of 24VDC and a rated current of at least 15A
㊱㊲ "-PWRIN+"	Input terminals for 24VDC power, typically connected to the positive and negative terminals of a 24VDC battery or 24VDC power supply, providing power to the entire system or other 24VDC accessories
㊳㊴ "+CHARGER-"	Input terminals for a power adapter to charge the battery, can also be connected to a 36VDC or 24VAC power supply for battery charging

NOTE: *For terminal wiring, remove the terminal from the control board and unscrew the terminal screws using a screwdriver. Insert the wire into the terminal, tighten the screws to secure the wire, and then reattach the terminal to the control board.*

Connect the Arm to the Control Board

STEP 1

Connect the Master Arm to the Control Board

- Insert the wire harness through the cable gland into the control box.
- Connect the red wire into terminal ⑱ “+MOTOR1” , the black wire into terminal ⑲ “MOTOR1-” , the blue wire into terminal ⑳ “ULT1” , the green wire into terminal ㉑ “COM” , and the yellow wire into terminal ㉒ “DLT1” .
- Tighten each of the screws so that the wires do not come loose and fall out.

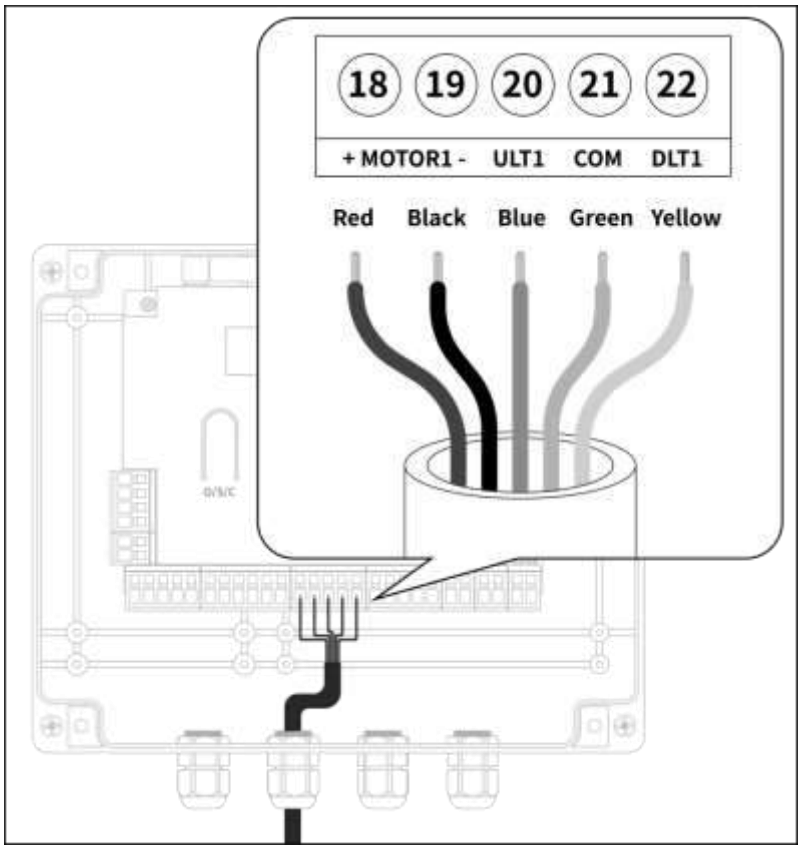

STEP 2

Bury Extension Cable with PVC Conduit

- Trench across driveway to bury the extension cable. Use PVC conduit to prevent damage to cables.
- Pull the extension cable through the conduit.

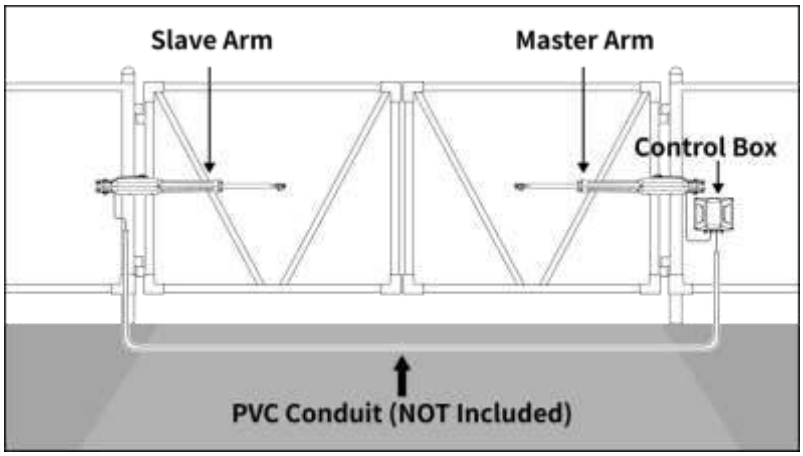

Connect the Arm to the Control Board

STEP 3

Connect the Extension Cable to the Slave Arm

- Match the color-coded conductors from each cable and twist together the ends of conductors with the same color.
- Wrap each connection individually with electrical tape to ensure proper insulation.

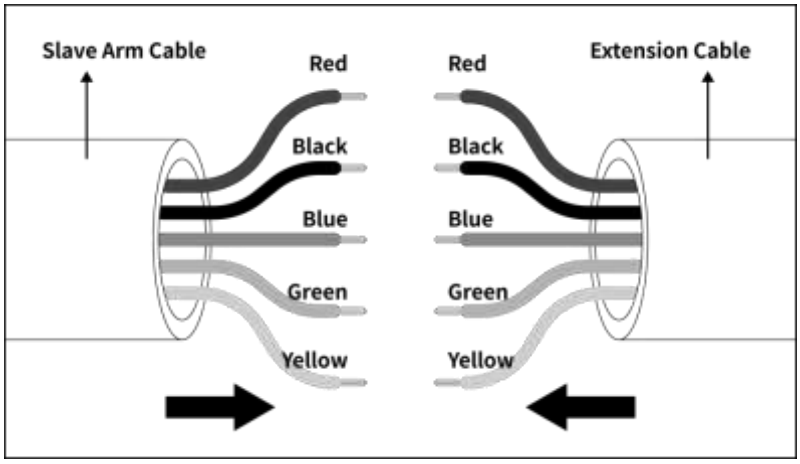

STEP 4

Connect the Slave Arm to the Control Board

- Insert the wire harness through the cable gland into the control box.
- Connect the red wire into terminal ㉓ "+MOTOR2", the black wire into terminal ㉔ "MOTOR2-", the blue wire into terminal ㉕ "ULT2", the green wire into terminal ㉖ "COM", and the yellow wire into terminal ㉗ "DLT2".
- Tighten each of the screws so that the wires do not come loose and fall out.

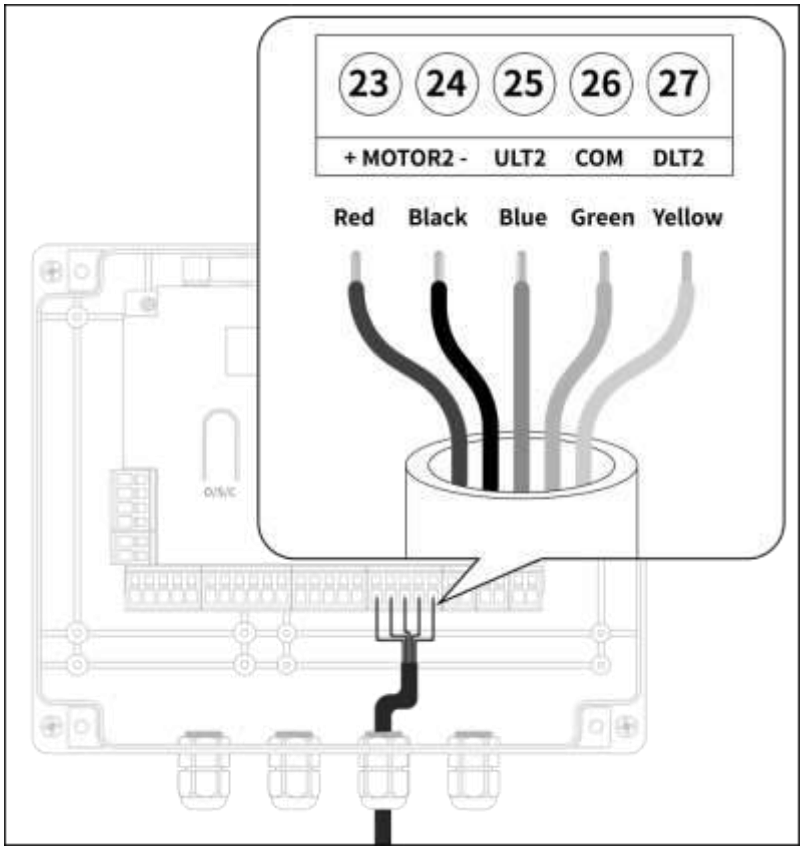

Connection of Power Supply

WARNING

- *A professional electrician is required for wire connection to avoid the risk of injury, electric shock, or death. NEVER connect the gate opener to the electrical outlet before all the installations have been done.*
- *It is recommended to use a surge protector with a rated current of 5A with the UPS01. Protect the electrical outlet with a weatherproof cover if it is located outdoors.*

Power Mode 1

Use AC Electricity Only

- Connect the male terminals from the LOAD output wires of the UPS01 power supply to the female terminals of the power input wires connected to the "-PWRIN+" terminals of the control board.
- Plug the UPS01 power cord into an electrical outlet.

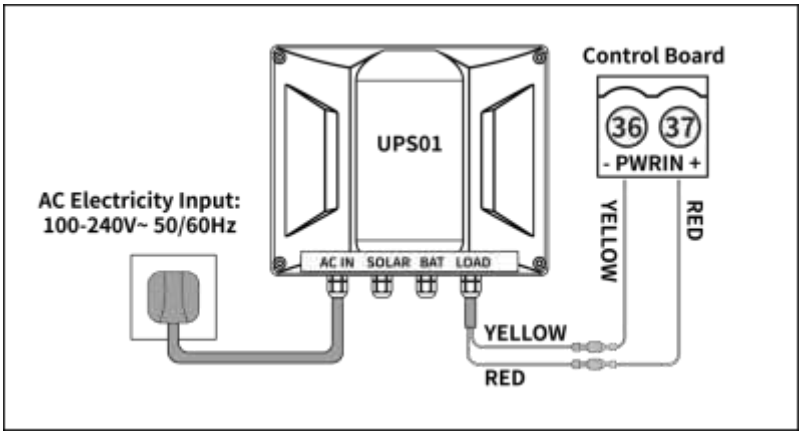

Power Mode 2

By AC Electricity and Back-up Batteries

- If AC power failures occur for less than 8 hours per day, you can use a minimum of 24VDC 5Ah automotive / marine type battery as a backup power source while using AC electricity to charge the battery.
- Connect the male terminals from the LOAD output wires of the UPS01 power supply to the female terminals of the power input wires connected to the "-PWRIN+" terminals of the control board.
- Connect two 12VDC batteries in series to achieve 24VDC (batteries not included).
- Connect the BAT wires of the UPS01 power supply to the batteries.
- Plug the UPS01 power cord into an electrical outlet.

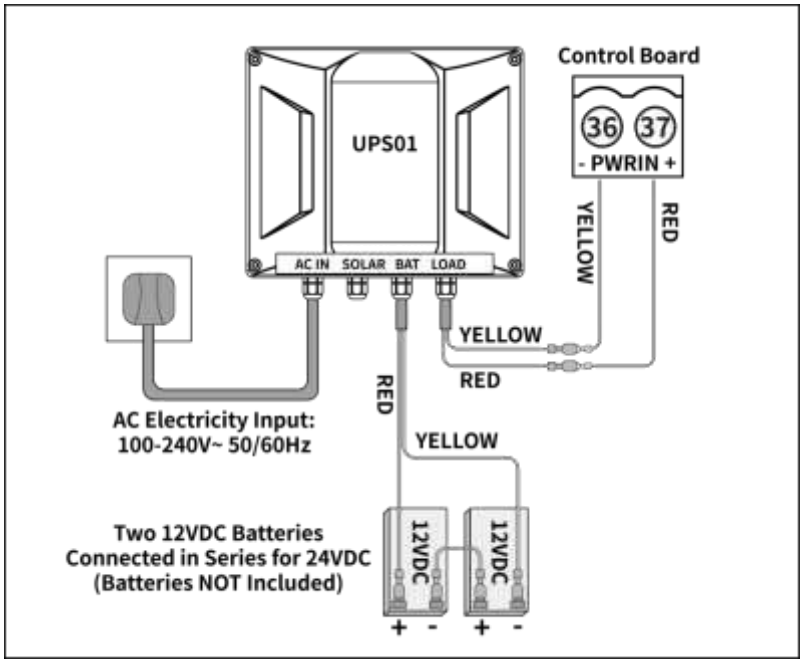

Connection of Power Supply

Power Mode 3

By Solar Panels and Batteries

- Connect the male terminals from the LOAD output wires of the UPS01 power supply to the female terminals of the power input wires connected to the "-PWRIN+" terminals of the control board.
- Connect two 12VDC batteries in series to achieve 24VDC (batteries not included).
- Connect the BAT wires of the UPS01 power supply to the batteries.
- Assemble the solar panels (sold separately) and connect the solar panels in parallel and mount in an area clear of all obstructions and shading from buildings and trees. The solar panel should face south if it is located north of the equator. If it is located south of the equator, it should face north.
- Connect the SOLAR wires of the UPS01 power supply to the solar panels.

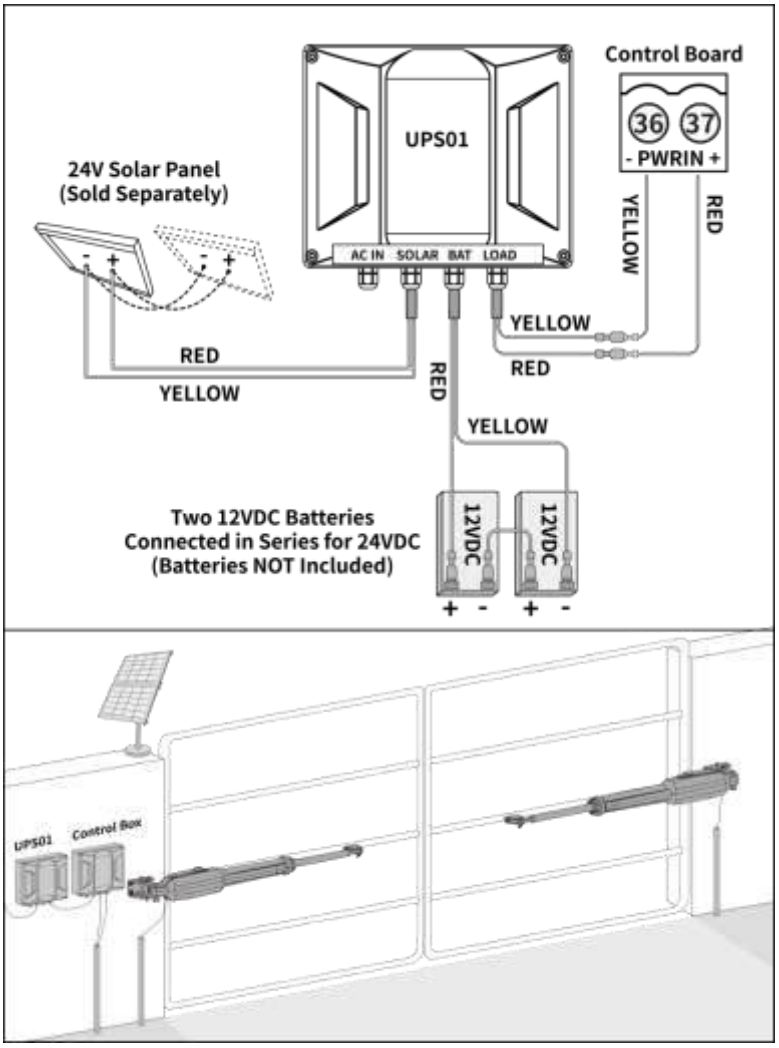

NOTE ABOUT THE BATTERY AND SOLAR PANEL

- *The batteries should be waterproof, or they should be placed in waterproof housing.*
- *The UPS01 power supply supports a maximum solar panel power of 240W, exceeding this limit can cause damage to the UPS01 power supply.*
- *If the gate opener is solely powered by battery and utilizes the solar panel for charging, a minimum of a 24VDC 12Ah automotive/marine type battery and a 24V 20W solar panel are required.*
- *If there are more than 6 hours of sunlight per day and no accessories are connected (except for the photocell sensor, electric lock, push button, and warning light), the gate opener can operate 10 cycles per day.*
- *Add more solar panels and increase battery capacity if there is less than 6 hours of sunlight per day or if using any accessories (such as an external receiver, exit wand, or wired keypad).*
- *For precise recommendations on solar panel power and battery capacity, please contact our customer support at www.topens.com.*

Connection of Power Supply

Power Mode 4

By AC Electricity, Solar Panels and Back-up Batteries

- Connect the male terminals from the LOAD output wires of the UPS01 power supply to the female terminals of the power input wires connected to the "-PWRIN+" terminals of the control board.
- Connect two 12VDC batteries in series to achieve 24VDC (batteries not included).
- Connect the BAT wires of the UPS01 power supply to the batteries.
- Assemble the solar panels (sold separately) and connect the solar panels in parallel and mount in an area clear of all obstructions and shading from buildings and trees. The solar panel should face south if it is located north of the equator. If it is located south of the equator, it should face north.
- Connect the SOLAR wires of the UPS01 power supply to the solar panels.
- Plug the UPS01 power cord into an electrical outlet.

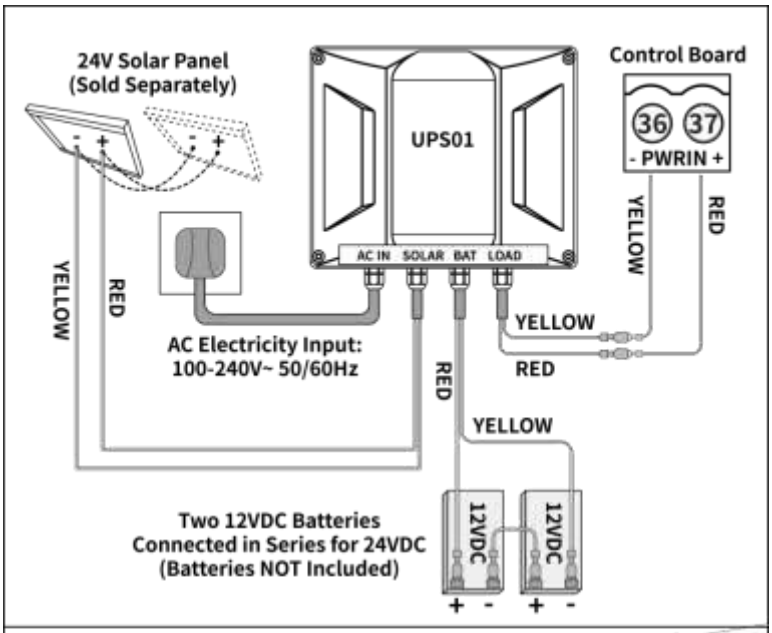

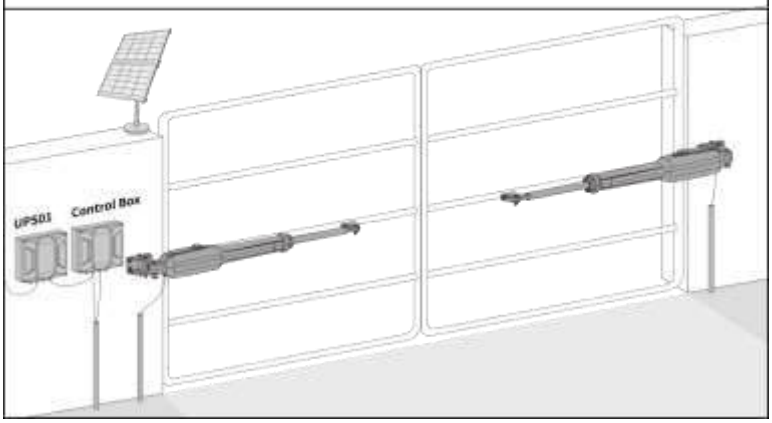

NOTE ABOUT THE BATTERY AND SOLAR PANEL
◆ *The batteries should be waterproof, or they should be placed in waterproof housing.*
◆ *The UPS01 power supply supports a maximum solar panel power of 240W, exceeding this limit can cause damage to the UPS01 power supply.*
◆ *If AC power failures occur for less than 8 hours per day, you can use a minimum of 24VDC 5Ah automotive/marine type battery and a 24V 10W solar panel as a backup power source.*

Program the Remote Control

NOTE
◆ *Keep the gate movement area free of obstructions, and ensure children, pets and livestock stay away from the gate opener system while the gate is in motion.* ◆ *If you lose any remote control, please erase and reprogram all remaining remote controls for safety.*

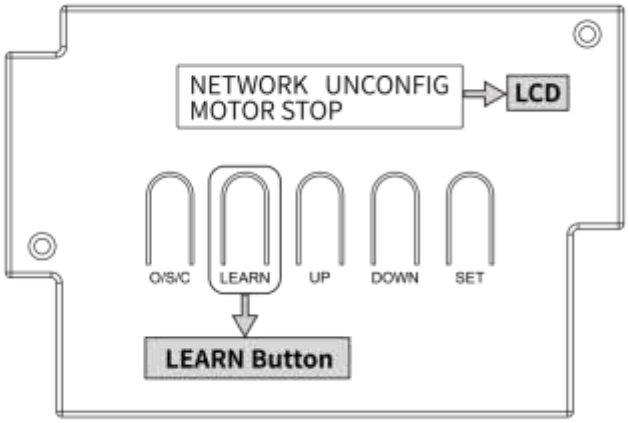

Function of the Remote Control Button

Each remote control has four buttons: A, B, C, and D. There are two working modes for these buttons, which can be configured through either the control board or the TOPENS APP. Please refer to the configuration steps in the section of Setting of the Control Board or TOPENS Smart Swing Gate Opener APP User Manual in this manual.

ONE BUTTON MODE

- Button A, B and C share the same function. You can use any of these three buttons to program with TOPENS smart swing gate opener.
- Each press of the programmed button will cycle the gate through open, stop, close, stop, and open.

SEPARATE MODE (Factory Default Setting)

- You can use any of these buttons to program with TOPENS smart swing gate opener.
- After successful programming, press button A to open the gate, press button B to close the gate, press button C to stop the gate.

NOTE: *When set to separate mode, TOPENS TC188 Universal Keypad (wireless mode), TC173 Wireless Push Button can only be used to open the gate, and the gate can only be closed using the remote control or the TOPENS APP.*

Unique Functions for Smart Swing Gate Opener

- If the "Master Gate Quick Opening" function is enabled, the master gate will open quickly when you press the "D" button on the programmed remote control. Please refer to the configuration steps in the section of Setting of the Control Board or TOPENS Smart Swing Gate Opener APP User Manual in this manual to enable the "Master Gate Quick Opening" function.
- Press the button A and D simultaneously to quickly enable or disable the auto close function.

NOTE: *The master gate can operate independently only when the slave gate is fully closed.*

Program the Remote Control

How to Program the Remote Control

The remote control MUST be programmed to the gate opener before use. The remote controls that come with the gate opener are preprogrammed.

If you purchase additional remote controls, or if the programmed remotes are not working, repeat the programming steps below for each remote control.

Enter Programming Mode

- Press and release the LEARN button on the control board. The LCD will show "REMOTE CONTROL LEARNING..." , indicating that the gate opener is now in programming mode.

Program the Remote Control

- Press the remote control button you want to program once, then press it again after the LED on the remote turns off.
- The LCD will show "LEARNING SUCCESSFUL" then back to standby mode, indicating successful programming.

Additional Remote Controls

- The gate opener can pair Max. 120 TC131 remote controls on its own, and up to 250 with the ERM12 External Receiver (sold separately on the TOPENS website www.topens.com).

How to Erase All Programmed Remote Controls

- Press and hold the LEARN button on the control board, the LCD will first show "REMOTE CONTROL LEARNING..." . Keep holding the button until the LCD shows "DELETING SUCCESSFUL" . Now all programmed remote controls have been erased.

Adjust the Limit Switch

NOTE
◆ *The position of Limit Switch A has been fixed at the factory.* ◆ *The limit switches are located underneath the arm. Turn the arm over to access the limit switch screws. Once the adjustment is completed, remember to turn the arm back to its correct position.*

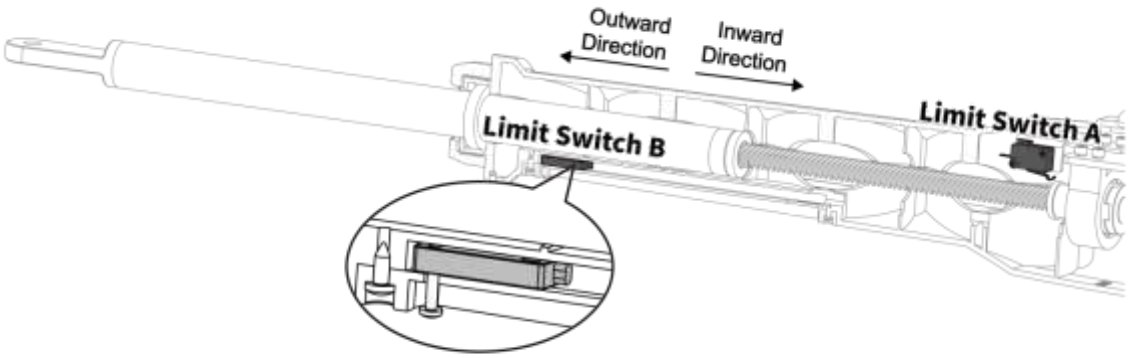

Screw for Fixing Limit Switch B

For Pull-to-Open Installation

Adjust the Limit Switch B to Determine the Closed Position

- Make sure that the moving rod is fully retracted when the gate is in the fully open position before adjusting the limit switch.
- Turn on power to operate the gate opener, the arm will extend to close the gate.
- If the gate closes over the desired closed position, press the remote control to stop the gate opener. Use a screwdriver to loosen the screw of the limit B, slightly slide the limit switch B inwards.
- If the gate closes halfway and fails to get to the desired closed position, slightly slide the limit switch B outwards.
- Please repeat the above steps until the gate reaches and automatically stops at the desired closed position. Then tighten the screw firmly.

For Push-to-Open Installation

Adjust the Limit Switch B to Determine the Open Position

- Make sure that the moving rod is fully retracted when the gate is in the fully closed position before adjusting the limit switch.
- Turn on power to operate the gate opener, the arm will extend to open the gate.
- If the gate opens over the desired open position, press the remote control to stop the gate opener. Use a screwdriver to loosen the screw of the limit B, slightly slide the limit switch B inwards.
- If the gate opens halfway and fails to get to the desired open position, slightly slide the limit switch B outwards.
- Please repeat the above steps until the gate reaches and automatically stops at the desired open position. Then tighten the screw firmly.

Setting of the Control Board

WARNING
◆ *Keep away from the gate while setting up the gate opener system to avoid unexpected gate movement.* ◆ *Carefully set the control board to prevent the risk of damaging the gate opener and causing injury or death.* ◆ *Always seek assistance from a professional technician or electrician if you have any questions.*

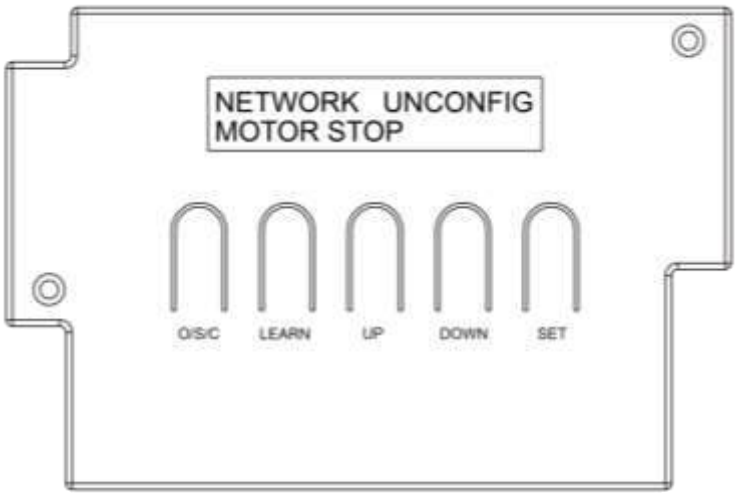

Function of the Buttons on the Control Board:
O/S/C: Each press of the button will cycle the gate through open, stop, close, stop, and open.
LEARN: You can program or erase the remote by the "LEARN" button. Please refer to the section of Program the Remote Control in this manual.
UP, DOWN and SET: You can set the control board functions through the "UP" button, "DOWN" button and "SET" button. Please refer to the following instructions for detailed steps.

Before Setting the Control Board
Ensure that the gate opener is correctly mounted on the gate. Power on the gate opener. The LCD on the control board will show "NETWORK UNCONFIG", "MOTOR STOP", indicating that the gate opener is in standby mode. Press and hold the "SET" button for more than 4 seconds. The LCD will enter the main settings page.

Set Network Configure
- In the main settings page, press the "UP" or "DOWN" button to select "1.NETWORK CONFIG", then press "SET" button to enter the network configuration options.
- You can connect the control board to the APP by this setting. Please refer to the section of TOPENS Smart Swing Gate Opener APP User Manual in this manual for specific operating instructions. After configuring, the LCD will return to standby mode. The current date and time will be displayed on the first line of the LCD.
- If you want to set up other settings, you can press and hold the "SET" button for more than 4 seconds to enter the main settings page again.

Setting of the Control Board

Set Single/Dual Gate

- In the main settings page, press the "UP" or "DOWN" button to select "2.SINGLE/DUAL", then press "SET" button to enter the setting of Single/Dual Gate . Use the "UP" or "DOWN" button to choose the mode that matches your installation type.
- After selecting the gate mode, press the "SET" button to save the setting. The LCD will return to the main settings page, indicating the setup is complete.
- If no additional settings are needed, press and hold "SET" button for 4 seconds or select "21.EXIT" to return to standby mode. If there is no operation for over 30 seconds, the system will also return to standby mode automatically.

IMPORTANT NOTE: Single/Dual Gate setting must be consistent with the actual use of the gate opener. Otherwise the gate opener will report an error when you use it, which affects the normal operation of the gate opener.

LCD Display	Meaning of the LCD Display
SINGLE GATE	Single Gate Mode
DUAL GATES	Dual Gate Mode (Factory Default Setting)

Set Pull-to-Open/Push-to-Open

- In the main settings page, press the "UP" or "DOWN" button to select "3.PULL/PUSH TO OPEN", then press "SET" button to enter the setting of Pull-to-Open/Push-to-Open. Press the "UP" or "DOWN" button to choose your installation type.
- Factory default setting is PULL TO OPEN. After selecting the installation type, press the "SET" button to save the setting. The LCD will return to the main settings page, indicating the setup is complete.
- If no additional settings are needed, press and hold "SET" button for 4 seconds or select "21.EXIT" to return to standby mode. If there is no operation for over 30 seconds, the system will also return to standby mode automatically.

Set Open Delay Time between Master and Slave Gate

- In the main settings page, press the "UP" or "DOWN" button to select "4.OPN DELAY TIME", then press "SET" button to enter the setting of Open Delay Time between Master and Slave Gate.
- The interval time can be adjusted from 0 to 9 seconds. Each press of the "UP" button will increase the numerical value by 1, and each press of the "DOWN" button will decrease the numerical value by 1.
- After selecting the open delay time, press the "SET" button to save the setting. The LCD will return to the main settings page, indicating the setup is complete.
- If no additional settings are needed, press and hold "SET" button for 4 seconds or select "21.EXIT" to return to standby mode. If there is no operation for over 30 seconds, the system will also return to standby mode automatically.

IMPORTANT NOTE: The interval time MUST be set to more than 4 seconds if an electric gate lock is used.

LCD Display	Meaning of the LCD Display
0	Master and Slave Gates Open Simultaneously
3	Master Gate Starts to Open 3 seconds Before Slave gate Starts to Open (Factory Default Setting)

Setting of the Control Board

Set Close Delay Time between Master and Slave Gate

- In the main settings page, press the "UP" or "DOWN" button to select "5.CLS DELAY TIME", then press "SET" button to enter the setting of Close Delay Time between Master and Slave Gate.
- The interval time can be adjusted from 0 to 9 seconds. Each press of the "UP" button will increase the numerical value by 1, and each press of the "DOWN" button will decrease the numerical value by 1.
- After selecting the close delay time, press the "SET" button to save the setting. The LCD will return to the main settings page, indicating the setup is complete.
- If no additional settings are needed, press and hold "SET" button for 4 seconds or select "21.EXIT" to return to standby mode. If there is no operation for over 30 seconds, the system will also return to standby mode automatically.

IMPORTANT NOTE: The interval time MUST be set to more than 4 seconds if an electric gate lock is used.

LCD Display	Meaning of the LCD Display
0	Master and Slave Gates Close Simultaneously
3	Slave Gate Starts to Close 3 seconds Before Master gate Starts to Close (Factory Default Setting)

Set Soft Stop Time

- The soft stop is designed to slow down the gate during the final phase before it fully stops, protecting the motor.
- In the main settings page, press the "UP" or "DOWN" button to select "6.SOFT STOP TIME", then press "SET" button to enter the setting of Soft Stop Time.
- The soft stop time can be adjusted from 0 to 5 seconds. Each press of the "UP" button will increase the numerical value by 1, and each press of the "DOWN" button will decrease the numerical value by 1.
- After selecting the soft stop time, press the "SET" button to save the setting. The LCD will return to the main settings page, indicating the setup is complete.
- After adjusting, use the remote control to run a complete open and close cycle to calibrate the full open and close times. This will ensure the adjustment is effective in subsequent cycles.
- If no additional settings are needed, press and hold "SET" button for 4 seconds or select "21.EXIT" to return to standby mode. If there is no operation for over 30 seconds, the system will also return to standby mode automatically.

LCD Display	Meaning of the LCD Display
3	Soft Stop Time is 3 seconds (Factory Default Setting)

Setting of the Control Board

Set Open Stall Force

- Stall force regulates the gate's sensitivity to obstacles during operation. A higher stall force decreases sensitivity, making the gate less likely to detect objects. A lower stall force increases sensitivity, causing the gate to stop or reverse when encountering even minor obstructions.
- In the main settings page, press the "UP" or "DOWN" button to select "7.OPEN FORCE", then press "SET" button to enter the setting of Open Stall Force.
- The open stall force can be adjusted from 1 to 9 levels. Each press of the "UP" button will increase the numerical value by 1, and each press of the "DOWN" button will decrease the numerical value by 1.
- After selecting the open stall force, press the "SET" button to save the setting. The LCD will return to the main settings page, indicating the setup is complete.
- If no additional settings are needed, press and hold "SET" button for 4 seconds or select "21.EXIT" to return to standby mode. If there is no operation for over 30 seconds, the system will also return to standby mode automatically.

IMPORTANT NOTE: The appropriate stall force setting will depend on the gate's length and weight, so fine-tuning may be required. Please see detail steps in the Stall Force Adjustment and Obstruction Test section in this manual.

LCD Display	Meaning of the LCD Display
1	Minimum Force
4	Level 4 force (Factory Default Setting)
9	Maximum Force

Set Close Stall Force

- In the main settings page, press the "UP" or "DOWN" button to select "8.CLOSE FORCE", then press "SET" button to enter the setting of Close Stall Force.
- The close stall force can be adjusted from 1 to 9 levels. Each press of the "UP" button will increase the numerical value by 1, and each press of the "DOWN" button will decrease the numerical value by 1.
- After selecting the close stall force, press the "SET" button to save the setting. The LCD will return to the main settings page, indicating the setup is complete.
- If no additional settings are needed, press and hold "SET" button for 4 seconds or select "21.EXIT" to return to standby mode. If there is no operation for over 30 seconds, the system will also return to standby mode automatically.

LCD Display	Meaning of the LCD Display
1	Minimum Force
4	Level 4 force (Factory Default Setting)
9	Maximum Force

Enable/Disable Open Safety Photocell Beam System (PBS)

- In the main settings page, press the "UP" or "DOWN" button to select "9.OPEN PHOTO", then press "SET" button to enter the setting of Open Safety Photocell Beam System.
- Press the "UP" or "DOWN" button to enable or disable the PBS function, and then press the "SET" button to save the setting. The LCD will return to the main settings page, indicating the setup is complete.
- If no additional settings are needed, press and hold "SET" button for 4 seconds or select "21.EXIT" to return to standby mode. If there is no operation for over 30 seconds, the system will also return to standby mode automatically.

IMPORTANT NOTE: When the PBS function is enabled, the gate opener will not operate unless the PBS sensor is installed. The gate opener will stop if an obstruction blocks the sensor's beam while the gate is opening.

LCD Display	Meaning of the LCD Display
DISABLED	Open Safety Photocell Beam System Disabled (Factory Default Setting)
ENABLED	Open Safety Photocell Beam System Enabled

Enable/Disable Close Safety Photocell Beam System (PBS)

- In the main settings page, press the "UP" or "DOWN" button to select "10.CLOSE PHOTO", then press "SET" button to enter the setting of Close Safety Photocell Beam System.
- Press the "UP" or "DOWN" button to enable or disable the PBS function, and then press the "SET" button to save the setting. The LCD will return to the main settings page, indicating the setup is complete.
- If no additional settings are needed, press and hold "SET" button for 4 seconds or select "21.EXIT" to return to standby mode. If there is no operation for over 30 seconds, the system will also return to standby mode automatically.

IMPORTANT NOTE: When the PBS function is enabled, the gate opener will not operate unless the PBS sensor is installed. The gate opener will return to the open position if an obstruction blocks the sensor's beam while the gate is closing.

LCD Display	Meaning of the LCD Display
DISABLED	Close Safety Photocell Beam System Disabled (Factory Default Setting)
ENABLED	Close Safety Photocell Beam System Enabled

Setting of the Control Board

Enable/Disable Auto Close Function

- The auto close function allows the gate to automatically close after a set period.
- In the main settings page, press the "UP" or "DOWN" button to select "11.AUTOCLS ONOFF", then press "SET" button to enter the setting of Auto Close Function.
- Press the "UP" or "DOWN" button to enable or disable the auto close function, and then press the "SET" button to save the setting. The LCD will return to the main settings page, indicating the setup is complete.
- The auto close function can also be enabled or disabled by pressing the button A and D simultaneously.
- If no additional settings are needed, press and hold "SET" button for 4 seconds or select "21.EXIT" to return to standby mode. If there is no operation for over 30 seconds, the system will also return to standby mode automatically.

IMPORTANT NOTE: The auto close function should be enabled if a vehicle sensor exit wand is installed. When the auto close function is enabled, the photocell sensor is highly recommended to be installed with the gate opener for safety.

LCD Display	Meaning of the LCD Display
DISABLED	Auto Close Function Disabled (Factory Default Setting)
ENABLED	Auto Close Function Enabled

Set Auto Close Time

- In the main settings page, press the "UP" or "DOWN" button to select "12.AUTOCLS TIME", then press "SET" button to enter the setting of Auto Close Time.
- The auto close time can be adjusted from 3 to 120 seconds. Each press of the "UP" button will increase the numerical value by 1, and each press of the "DOWN" button will decrease the numerical value by 1.
- After selecting the desired auto close time, press the "SET" button to save the setting. The LCD will return to the main settings page, indicating the setup is complete.
- If no additional settings are needed, press and hold "SET" button for 4 seconds or select "21.EXIT" to return to standby mode. If there is no operation for over 30 seconds, the system will also return to standby mode automatically.

IMPORTANT NOTE: Before setting the auto close time, you should enable the Auto Close Function.

LCD Display	Meaning of the LCD Display
03	The Auto Close time is 3 Seconds (Minimum Auto Close Time)
15	The Auto Close time is 15 Seconds (Factory Default Setting)

Setting of the Control Board

Enable/Disable Running Alarm When Gate Opening or Closing

- The built-in alarm will sound intermittently during gate opening or closing to provide an alert of gate movement.
- In the main settings page, press the "UP" or "DOWN" button to select "13.RUNNING ALARM", then press "SET" button to enter the setting of Running Alarm.
- Press the "UP" or "DOWN" button to enable or disable the running alarm function, and then press the "SET" button to save the setting. The LCD will return to the main settings page, indicating the setup is complete.
- If no additional settings are needed, press and hold "SET" button for 4 seconds or select "21.EXIT" to return to standby mode. If there is no operation for over 30 seconds, the system will also return to standby mode automatically.

LCD Display	Meaning of the LCD Display
DISABLED	Running Alarm Disabled (Factory Default Setting)
ENABLED	Running Alarm Enabled

Enable/Disable Low Voltage Alarm

- The built-in alarm will sound intermittently when the input voltage drops below 21V.
- In the main settings page, press the "UP" or "DOWN" button to select "14.LOW VOL ALARM", then press "SET" button to enter the setting of Low Voltage Alarm.
- Press the "UP" or "DOWN" button to enable or disable the low voltage alarm function, and then press the "SET" button to save the setting. The LCD will return to the main settings page, indicating the setup is complete.
- If no additional settings are needed, press and hold "SET" button for 4 seconds or select "21.EXIT" to return to standby mode. If there is no operation for over 30 seconds, the system will also return to standby mode automatically.

LCD Display	Meaning of the LCD Display
DISABLED	Low Voltage Alarm Disabled (Factory Default Setting)
ENABLED	Low Voltage Alarm Enabled

Set Remote Control Working Mode

- In the main settings page, press the "UP" or "DOWN" button to select "15.REMOTE MODE", then press "SET" button to enter the setting of Remote Control Working Mode.
- Press the "UP" or "DOWN" button to choose the remote control working mode, and then press the "SET" button to save the setting. The LCD will return to the main settings page, indicating the setup is complete.
- If no additional settings are needed, press and hold "SET" button for 4 seconds or select "21.EXIT" to return to standby mode. If there is no operation for over 30 seconds, the system will also return to standby mode automatically.

LCD Display	Meaning of the LCD Display
ONE BUTTON MODE	Button A, B and C share the same function, each press of the programmed button will cycle the gate through open, stop, close, stop, and open.
SEPARATE MODE	Press button A to open the gate, press button B to close the gate, press button C to stop the gate (Factory Default Setting).

Enable/Disable Master Gate Quick Opening

- Pressing the "D" button on the programmed remote control will quickly open the master gate after enabling master gate quick opening.
- In the main settings page, press the "UP" or "DOWN" button to select "16.MASTER Q CTRL", then press "SET" button to enter the setting of Master Gate Quick Opening.
- Press the "UP" or "DOWN" button to enable or disable the master gate quick opening function, and then press the "SET" button to save the setting. The LCD will return to the main settings page, indicating the setup is complete.
- If no additional settings are needed, press and hold "SET" button for 4 seconds or select "21.EXIT" to return to standby mode. If there is no operation for over 30 seconds, the system will also return to standby mode automatically.

IMPORTANT NOTE: The master gate can operate independently only when the slave gate is fully closed.

LCD Display	Meaning of the LCD Display
DISABLED	Master Gate Quick Opening Disabled (Factory Default Setting)
ENABLED	Master Gate Quick Opening Enabled

Enable/Disable Pre-alarm Before Opening or Closing

- The built-in alarm will sound intermittently 4 seconds before the gate begins opening or closing.
- In the main settings page, press the "UP" or "DOWN" button to select "17.OP/CL PRE-ALM", then press "SET" button to enter the setting of Pre-alarm Before Opening or Closing.
- Press the "UP" or "DOWN" button to enable or disable the pre-alarm before opening or closing function, and then press the "SET" button to save the setting. The LCD will return to the main settings page, indicating the setup is complete.
- If no additional settings are needed, press and hold "SET" button for 4 seconds or select "21.EXIT" to return to standby mode. If there is no operation for over 30 seconds, the system will also return to standby mode automatically.

LCD Display	Meaning of the LCD Display
DISABLED	The Pre-alarm Function Disabled (Factory Default Setting)
ENABLED	The Pre-alarm Function Enabled

Setting of the Control Board

Set Lock Terminal Working Mode

- In the main settings page, press the "UP" or "DOWN" button to select "18.LOCK SET", then press "SET" button to enter the setting of Lock Terminal Working Mode.
- Press the "UP" or "DOWN" button to choose the lock terminal working mode, and then press the"SET"button to save the setting. The LCD will return to the main settings page, indicating the setup is complete.
- If no additional settings are needed, press and hold "SET" button for 4 seconds or select "21.EXIT" to return to standby mode. If there is no operation for over 30 seconds, the system will also return to standby mode automatically.

LCD Display	Meaning of the LCD Display
SOLENOID	The LOCK terminal provides a 24VDC output only during the first 4 seconds of the gate opener's opening cycle. At all other times, the LOCK terminal has no output (Factory Default Setting).
ELECTROMAGNETIC	The LOCK terminal provides a 0V output only during the first 4 seconds of the gate opener's opening cycle. At all other times, there is an output of 24V from the LOCK terminal.

Select the APP to Configure the Network

- In the main settings page, press the "UP" or "DOWN" button to select "19.APP CHOOSE", then press "SET" button to enter the setting of the APP.
- Press the "UP" or "DOWN" button to choose the APP you want to configure the network, and then press the "SET" button to save the setting. The LCD will return to the main settings page, indicating the setup is complete.
- If no additional settings are needed, press and hold "SET" button for 4 seconds or select "21.EXIT" to return to standby mode. If there is no operation for over 30 seconds, the system will also return to standby mode automatically.

LCD Display	Meaning of the LCD Display
TOPENS	The TOPENS APP allows you to configure all settings of the gate opener. Refer to the section of TOPENS Smart Swing Gate Opener APP User Manual in this manual for details (Factory Default Setting).
TUYA	The TUYA APP only allows control of the gate to open, close, and stop.

Return to Factory Default Setting

- In the main settings page, press the "UP" or "DOWN" button to select "20.DEFAULT SET", then press "SET" button to enter the setting of Return to Factory Default Setting.
- The LCD display will remind you to confirm again. If you select "CONFIRM" and then press the "SET" button, all the data will return to default settings. The LCD will return to the main settings page, indicating the setup is complete.
- If no additional settings are needed, press and hold "SET" button for 4 seconds or select "21.EXIT" to return to standby mode. If there is no operation for over 30 seconds, the system will also return to standby mode automatically.

Setting of the Control Board

Exit the Setting Page

- If all settings are complete and no further adjustments are needed, press the "UP" or "DOWN" button to select the "21.EXIT", and the LCD will switch to standby mode. If there is no operation for over 30 seconds, the system will also return to standby mode, or you can press and hold the "SET" button for at least 4 seconds to exit.

Meaning of the Operating Status and Error Messages on LCD Display

- This first line on the LCD displays "NETWORK UNCONFIG" by default. Once the control board and the APP are successfully configured, it will show the current date and time.
- The second line on the LCD displays the current operating status of the gate opener. If an operation error occurs, alarm information will alternate with the status display.

LCD Display	Meaning of the LCD Display
MOTOR STOP	The gate opener stops on the way (this is the default status displayed after power-on).
FULLY OPENED	The gate opener is fully open.
FULLY CLOSED	The gate opener is fully closed.
OPENING	The gate opener is opening.
CLOSING	The gate opener is closing.
MOTOR1 OVER LOAD	The motor 1 is overloaded.
MOTOR2 OVER LOAD	The motor 2 is overloaded.
CONST. OVERLOAD	Two sequential overloads have been detected.
EDGE ACTIVE!!	The edge sensor has been activated.
OPEN PHOTO ACT	The open photo beam is broken.
CLOSE PHOTO ACT	The close photo beam is broken.
OP&CL PHOTO ACT	The open and close photo beams are broken sequentially.
FIRE D. PORT ACT	Fire D. port is activated.
MT1 TRAVEL FAULT	Motor 1 travel fault.
MT2 TRAVEL FAULT	Motor 2 travel fault.
SLAVE MUST CLSED	Slave gate is not fully closed.
QUICK_Q DISABLED	Master gate quick opening function is disabled.
POWER LOW VOLT.	Input voltage is too low.

Stall Force Adjustment & Obstruction Test

Fine Tune the Stall Force

The stall force should be high enough to ensure the gate reaches both the open and close limits without reversing unnecessarily or causing frequent interruptions, but low enough to prevent injury if an obstruction is encountered. The appropriate stall force will depend on the gate's length and weight, so fine-tuning may be required. Follow these steps to adjust the stall force:

- **Initial Assessment:** Use the remote control to open and close the gate and observe its movement.
- **Adjust the Stall Force:** If the gate reverses or stops before reaching the fully open or close position, increase the stall force as instructed in the section of Setting of the Control Board or TOPENS Smart Swing Gate Opener APP User Manual in this manual.
- **Perform the Obstruction Test:** Run the test after every force setting adjustment (see below).

Obstruction Test

This test ensures that the gate opener's automatic obstruction sensing feature is functioning correctly. The gate should have enough force to reach both the open and close limits, but MUST reverse after contacting with a solid object.

- **Operate the Gate:** Open and close the gate with the remote control, ensuring that the gate stops at the proper open and close limit positions.
- **Setup for the Test:** Place a solid, immovable object in the gate's path to simulate an obstruction.
- **Test Gate Closure and Opening:** Run the gate in the closing direction towards the obstruction and conduct the same test with the gate moving in the opening direction.
- **Adjust Force if Necessary:** The gate should reverse when it encounters the obstruction. If the gate does not reverse, reduce the force as instructed in the section of Setting of the Control Board or TOPENS Smart Swing Gate Opener APP User Manual in this manual.

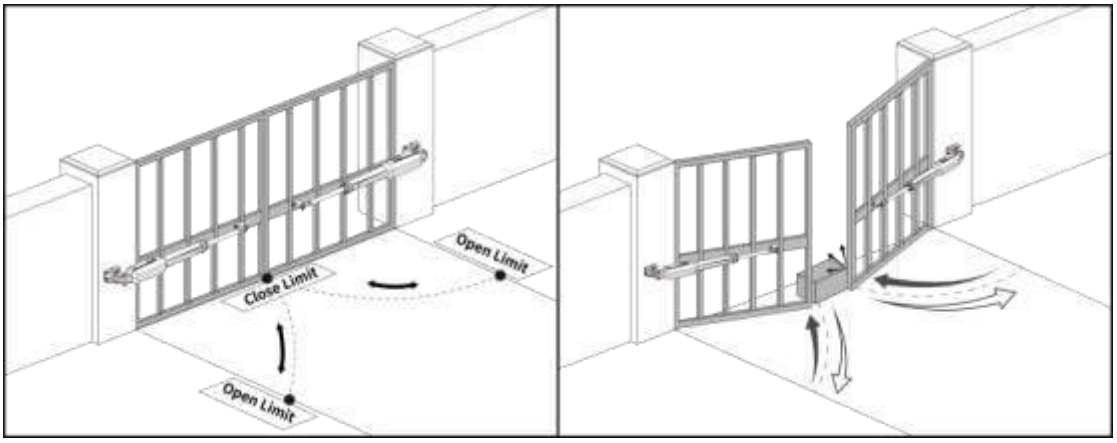

NOTES:

- *If the stall force is set too low (i.e., the sensitivity is too high), the gate may stop or reverse too easily, even with minimal obstruction or resistance, such as strong wind or heavy snow.*
- *Always perform an obstruction test for the gate each time you set up the control board or restart it after a power outage.*
- *The gate opener is designed to reverse the gate when the gate comes in contact with an obstruction. It is highly recommended to install a photocell sensor for additional safety.*

Connection of Accessories

NOTE
◆ *This section covers only the programming and wire connections with the control board. For additional operations, please refer to the corresponding accessory user manual.* ◆ *It is highly recommended to install a photocell sensor in the following situations for safety: if you have children or pets at your property, the gate opener auto close function is set to ON, the gate opener stall force is set to the maximum, a vehicle exit sensor is installed, or other gate control devices are used.*

TC188 Universal Keypad

Operate the gate using a user-defined password. You can use this keypad wirelessly or wire it to the gate opener according to your needs.

Wireless Mode Programming and Operation

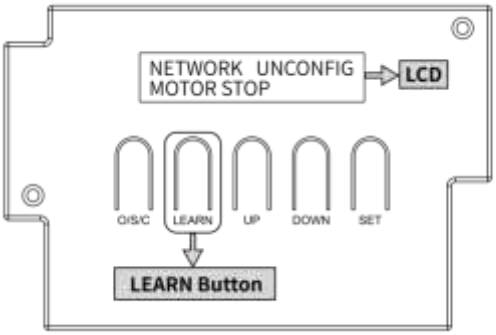

Step 1 Program New Master Code

Factory default master code is 9999, all codes should be 4 digits in length.

SET	4 digits Old Master Code	SET	01	SET	4 digits New Master Code	SET	4 digits New Master Code	SET

Step 2 Add New Permanent Entry Code

SET	Master Code	SET	02	SET	Entry Code	SET	Entry Code	SET

Step 3 Program with the Gate Opener

- ◆ Input the entry code of the keypad.
- ◆ Press and release the LEARN button on the control board. The LCD will show "REMOTE CONTROL LEARNING..." , indicating that the gate opener is now in programming mode.
- ◆ Press button A (or B) once, and the keypad LED backlight will flash quickly. Press it again after the backlight changes from a rapid flash to a slow flash.
- ◆ The LCD will show "LEARNING SUCCESSFUL" then back to standby mode, indicating successful programming.

Step 4 Operate the Gate Opener

Input the entry code and then press the programmed button A (or B) to operate the gate. Within 3 seconds of pressing button A (or B), you can press the button again without re-entering the code to operate the gate.

NOTE: *When the remote control is set to separate mode, the keypad can only be used to open the gate. The gate can only be closed using the remote control or the TOPENS APP.*

Connection of Accessories

Wired Mode Connection and Operation

Step 1 Remove the Battery

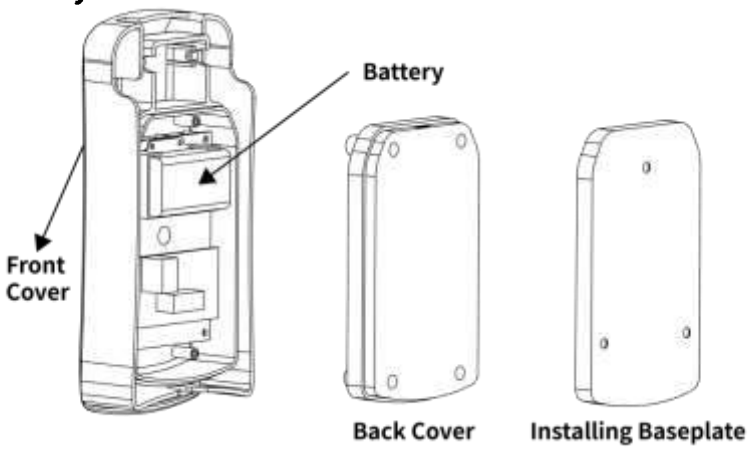

Step 2 Wire Connection

Connect the "COM" and "NO" terminals to the control board terminal ⑩ "CYCLE" and terminal ⑪ "GND". Then connect the "9-24V AC/DC" terminals to the control board terminal ⑪ "GND" and terminal ㊲ "PWRIN+". Polarity does not matter for these connections.

NOTE: *A 4C x 0.3 mm² (22AWG) cable is required for the wire connection, but it is NOT included.*

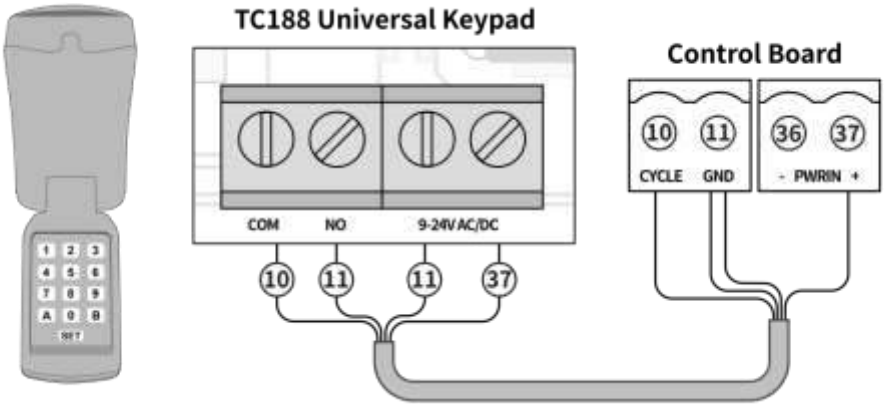

Step 3 Program New Master Code

Factory default master code is 9999, all codes should be 4 digits in length.

SET	4 Digits Old Master Code	SET	01	SET	4 Digits New Master Code	SET	4 Digits New Master Code	SET

Step 4 Add New Permanent Entry Code

SET	Master Code	SET	02	SET	Entry Code	SET	Entry Code	SET

Step 5 Operate the Gate Opener

Input the entry code and then press button A (or B) to operate the gate. Within 3 seconds of pressing button A (or B), you can press the button again without re-entering the code to operate the gate.

NOTE: *If the gate opener is ONLY solar powered, please add more solar panels and upgrade the battery capacity to support the additional power consumption by the wired keypad.*

Connection of Accessories

TKP3 Wireless Keypad

Operate the gate with a user defined password

Programming and Operation

- Press and release the LEARN button on the control board. The LCD will show " REMOTE CONTROL LEARNING..." , indicating that the gate opener is now in programming mode.
- Press the button "OK" on the keypad. The LCD will show "LEARNING SUCCESSFUL" then back to standby mode, indicating successful programming.
- Use the default password "888888" to operate the gate opener. Press "PIN" "8 8 8 8 8 8" and then press the button "OK" to operate the opener. Just one press of the button "OK" , the moving gate will stop for quick passing through.

Change the Password

- Press "PIN" and then input the old six digits password and then press "PIN" again, the LCD will show "CODE CHANGING" .
- Input the new six digits password and then press the "PIN" to confirm the new setting, the LCD will show "CHANGE SUCCESS" which indicates the password has been changed successfully.
- Press "PIN" "new six digits password" and then press the button "OK" to operate the gate opener.

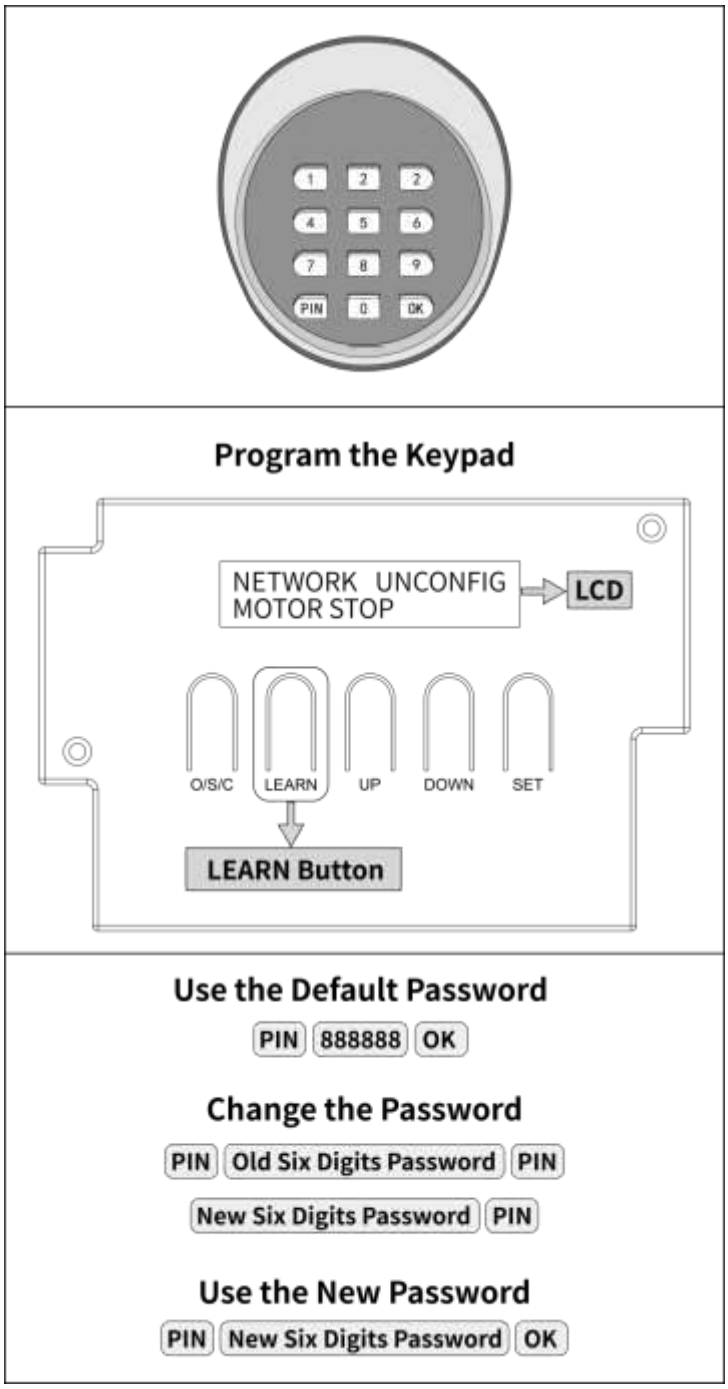

NOTES:

- *Each button press during programming must be completed within 1 second to ensure successful programming.*
- *If you forget the password, you can reset the keypad to restore the default code "888888" by reprogramming it.*

Connection of Accessories

TC173 Wireless Push Button

Open/close gate by pressing the wireless button

Programming and Operation

- Press and release the LEARN button on the control board. The LCD will show " REMOTE CONTROL LEARNING..." , indicating that the gate opener is now in programming mode.
- Press the push button once, then press it again after the LED on the push button turns off. The LCD will show "LEARNING SUCCESSFUL" then back to standby mode, indicating successful programming.
- Each press of the button will cycle the gate through open, stop, close, stop, and open.

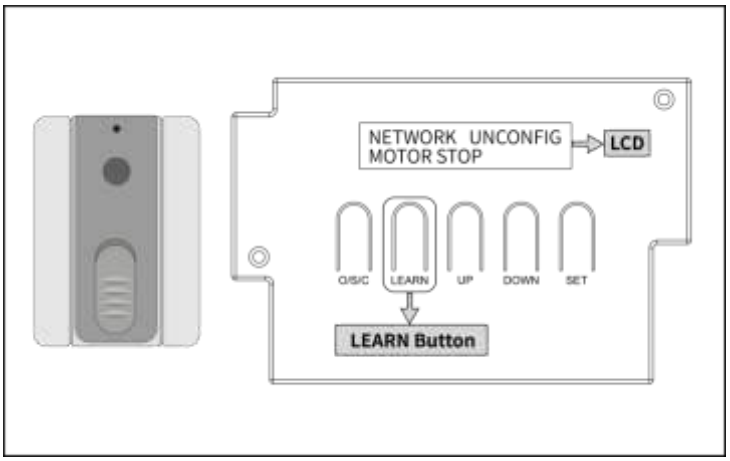

NOTE: *When the remote control is set to separate mode, the push button can only be used to open the gate. The gate can only be closed using the remote control or the TOPENS APP.*

TC196 Tuya WiFi Remote Control

- Control the gate opener with your cellphone anytime and anywhere when the remote controller is connected with WiFi.
- Please see detailed connection steps in TC196 user manual.

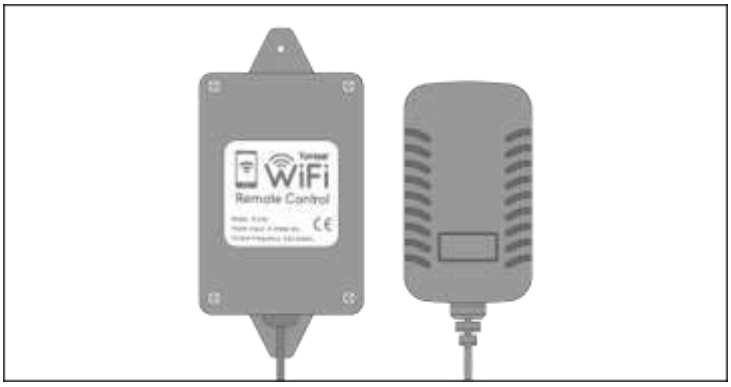

Connection of Accessories

ET24 Electric Gate Lock

Locks and unlocks the gate automatically

Wire Connection

- Connect the electric lock to the control board terminal ㉘ and ㉙ "+LOCK-", regardless of the polarity of the wires.
- Please set Lock Terminal Working Mode as "SOLENOID" as instructed in the section of Setting of the Control Board or TOPENS Smart Swing Gate Opener APP User Manual in this manual.

Key Installation Notes

- For pull to open gate, install the lock on the master gate, and the lock receiver on the slave gate.
- For push to open gate, install the lock on the slave gate, and the lock receiver on the master gate.
- The lock and receiver must fit close. Check it when the gates close firmly.
- Ensure that the lock and receiver are level, aligned with the gate opener arm, and mounted on a tube fence or other solid part of the gate surface.
- A gate block is required but not included.

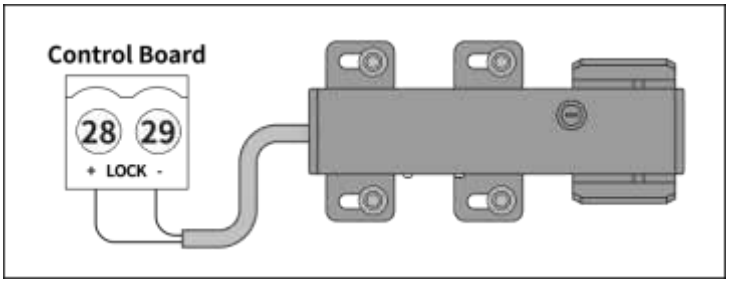

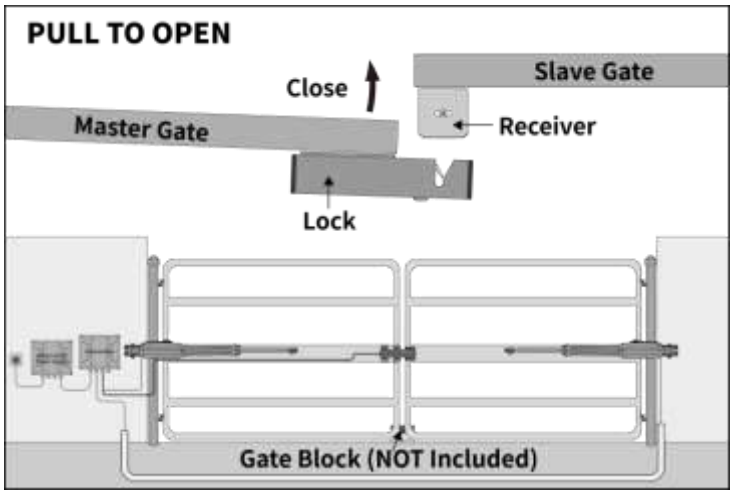

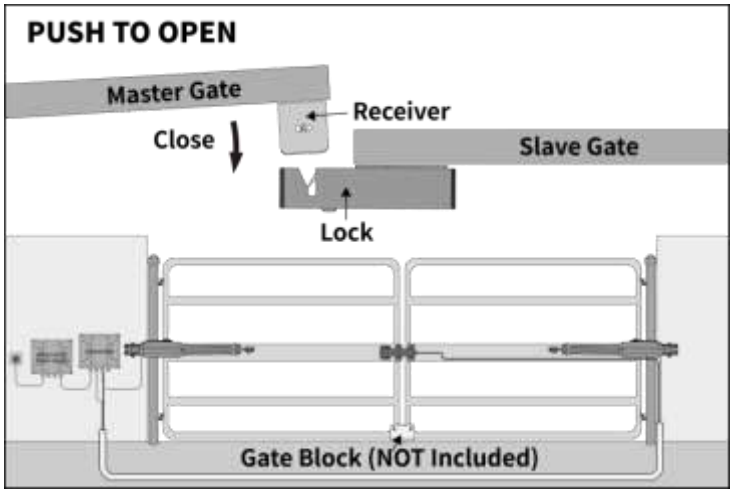

NOTE: *The open & close delay time between the master and slave arm MUST be set to more than 4 seconds.*

Connection of Accessories

TEW3 Vehicle Sensor Exit Wand

Opens the gate automatically when senses an approaching car

Wire Connection

- Connect the BLUE wire to the control board terminal ⑦ “OPN” .
- Connect the BLACK wire to the control board terminal ⑪ “GND” .
- Connect the GREEN wire to the control board terminal ㊱ “-PWRIN” .
- Connect the RED wire to the control board terminal ㊲ “PWRIN+” .
- The sensitivity range adjustment board should be wired to the GREEN wire and the YELLOW wire of the wand, regardless of the polarity of the wires.

Key Installation Notes

- Install the wand 7.5m to 30m (25ft. to 100ft.) away from the gate, and bury it 5cm (2") deep from ground and 20cm (8") from the driveway edge.
- Install the wand away from any power lines to avoid interrupting the detection signal.
- It is strongly recommended to enable the auto close function by referring to the section of Setting of the Control Board or TOPENS Smart Swing Gate Opener APP User Manual in this manual to ensure home security.

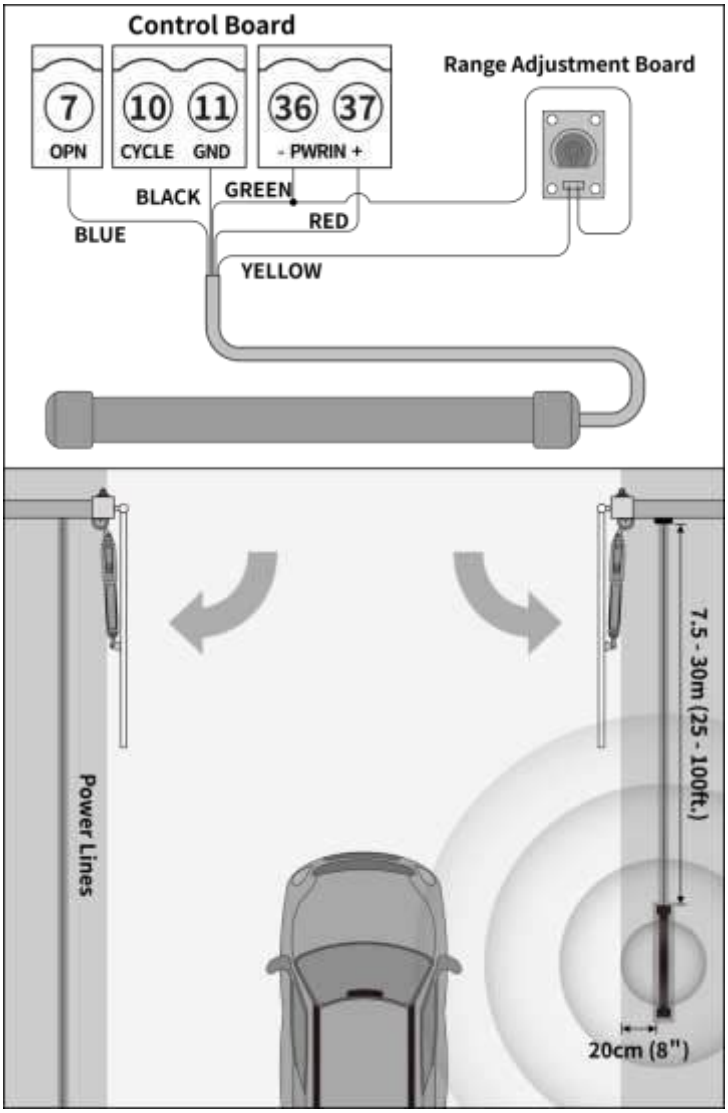

***NOTE:** If the gate opener is ONLY solar powered, please add more solar panels and upgrade the battery capacity to support the additional power consumption by the exit wand.*

Connection of Accessories

TC175P Wired Keypad

Operate the gate with a user defined password / ID card

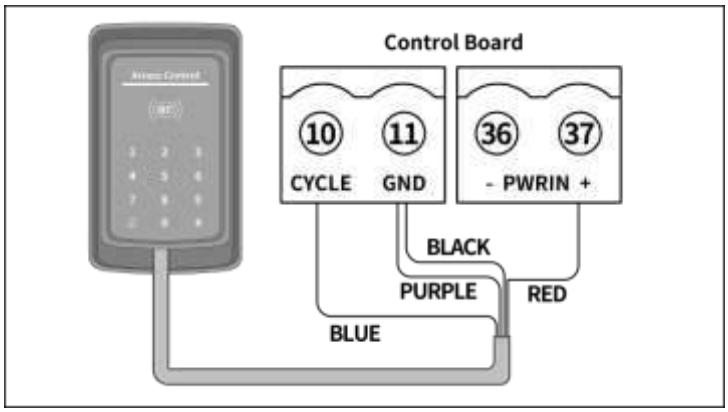

Wire Connection

- Connect the wires from the JP2 terminals of the wired keypad to the control board.
- Connect the BLUE wire to the control board terminal ⑩ "CYCLE".
- Connect the BLACK wire to the control board terminal ⑪ "GND".
- Connect the PURPLE wire to the control board terminal ⑪ "GND".
- Connect the RED wire to the control board terminal ㊲ "PWRIN+".

NOTES:

- *A 4C x 0.3 mm² (22AWG) cable is required for the wire connection, but it is NOT included.*
- *Please see detailed password setting steps in TC175P user manual.*
- *If the gate opener is ONLY solar powered, please add more solar panels and upgrade the battery capacity to support the additional power consumption by the wired keypad.*

HLR01 Homelink Remote Control Kit

Links the gate opener with your car's HomeLink system, allows for easy control of the gate opener through the HomeLink system.

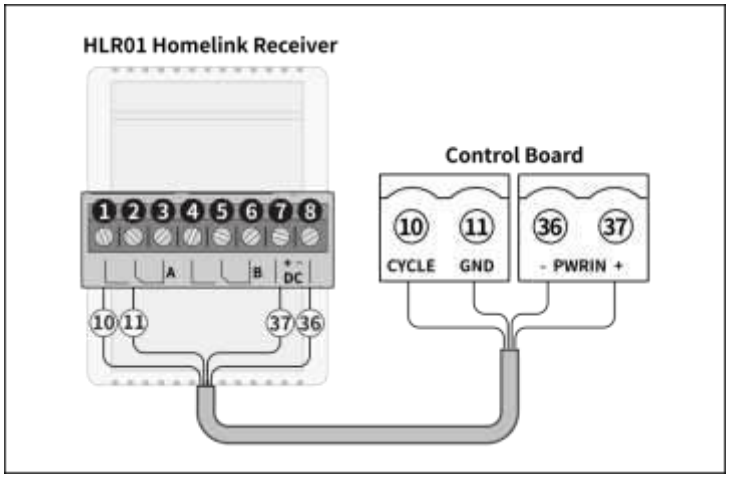

Wire Connection

- Connect terminal ❶ to the control board terminal ⑩ "CYCLE".
- Connect terminal ❷ to the control board terminal ⑪ "GND".
- Connect terminal ❼ "+DC" to the control board terminal ㊲ "PWRIN+".
- Connect terminal ❽ "DC-" to the control board terminal ㊱ "-PWR IN".

NOTES:

- *A 4C x 0.3 mm² (22AWG) cable is required for the wire connection, but it is NOT included.*
- *Please see detailed programming steps with Homelink system in HLR01 user manual.*
- *If the gate opener is ONLY solar powered, please add more solar panels and upgrade the battery capacity to support the additional power consumption by the Homelink receiver.*

Connection of Accessories

TRF3 Reflection Photocell Sensor

Prevents the gate from opening and/or closing when obstructed, adds security with simple wire connection

Wire Connection

- Connect " 10-25VAC/12-30VDC " terminals to the control board terminals ㉜ and ㉝ "+24VOU-", regardless of the polarity of the wires.
- **OPEN PROTECTION:** Connect "NC" terminal to the control board terminal ⑫ "OP_PHO". Connect "COM" terminal to the control board terminal ⑬ "GND".
- **CLOSE PROTECTION:** Connect "NC" terminal to the control board terminal ⑭ "CL_PHO". Connect "COM" terminal to the control board terminal ⑮ "GND".
- Enable the open and/or close photocell sensor function as instructed in the section of Setting of the Control Board or TOPENS Smart Swing Gate Opener APP User Manual in this manual.

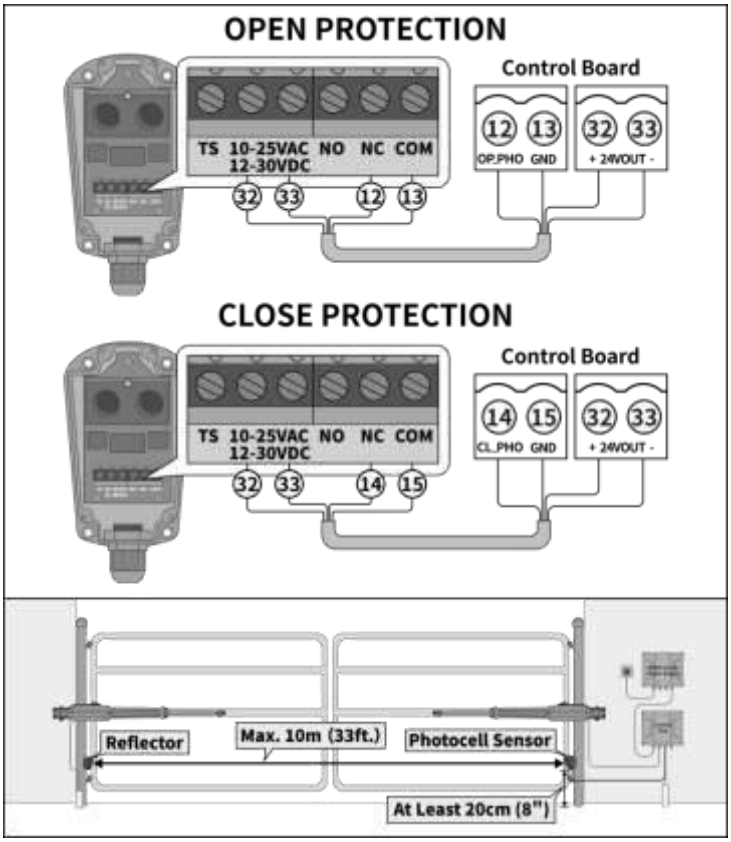

Key Installation Notes

- Mount the photocell sensor at least 20cm (8") above the ground.
- Power on the gate opener. Position the reflector directly opposite the mounted photocell sensor. With a press of the remote control, the photocell sensor working light turns to green, confirming that the reflector is in the correct position.
- The maximum sensing range of the photocell sensor is 10m (33ft.).

NOTES:

- *A 4C x 0.3 mm² (22AWG) cable is required for the wire connection, but it is NOT included.*
- *Two photocell sensors are required to provide protection during both gate opening and closing operations.*

Connection of Accessories

TC102 Infrared Photocell Sensor

Prevents the gate from opening and/or closing when obstructed, adds security

Wire Connection

- For both the emitter and receiver, connect "~ +" terminal to the control board terminal ㉜ "+24VOUT", connect "~ -" terminal to the control board terminal ㉝ "24VOUT-".
- **OPEN PROTECTION:** For the receiver, connect the "NC" terminal to the control board terminal ⑫ "OP_PHO", connect "COM" terminal to the control board terminal ⑬ "GND".
- **CLOSE PROTECTION:** For the receiver, connect the "NC" terminal to the control board terminal ⑭ "CL_PHO", connect "COM" terminal to the control board terminal ⑮ "GND".
- Enable the open and/or close photocell sensor function as instructed in the section of Setting of the Control Board or TOPENS Smart Swing Gate Opener APP User Manual in this manual.

Key Installation Notes

- Mount the photocell sensor at least 20cm (8") above the ground.
- Place the receiver on the control box side of the gate opener, directly facing the emitter.
- Ensure that both the emitter and receiver are aligned with each other. If manual precise alignment is difficult, use a visible laser beam for assistance.
- The maximum sensing range is 20m (65ft.), and the recommended distance between the emitter and receiver is 3m to 14m (10ft. to 46ft.).
- Put the cables into PVC conduit and bury the conduit underground to prevent damage.

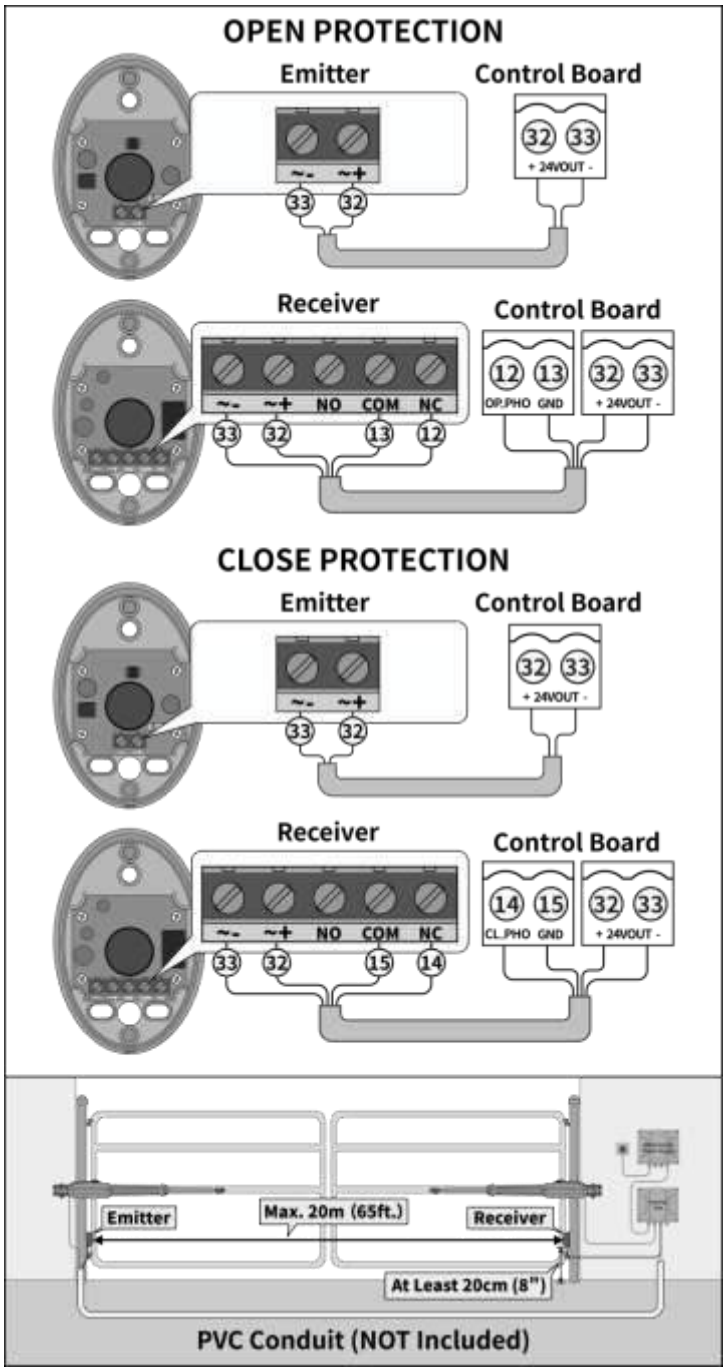

NOTES:

- *Connect the emitter to the gate opener with a 2C x 0.3 mm² (22AWG) cable. Connect the receiver to the gate opener with a 4C x 0.3 mm² (22AWG) cable. Cables are required but NOT included.*
- *Two photocell sensors are required to provide protection during both gate opening and closing operations.*

Connection of Accessories

ERM12 External Receiver

Allows up to 250 remotes to be programmed with the gate opener

Wire Connection

- Connect the BROWN wire to the control board terminal ⑩ "CYCLE" .
- Connect the BLACK wire to the control board terminal ⑪ "GND" .
- Connect the RED wire to the control board terminal ㊲ "PWRIN+" .

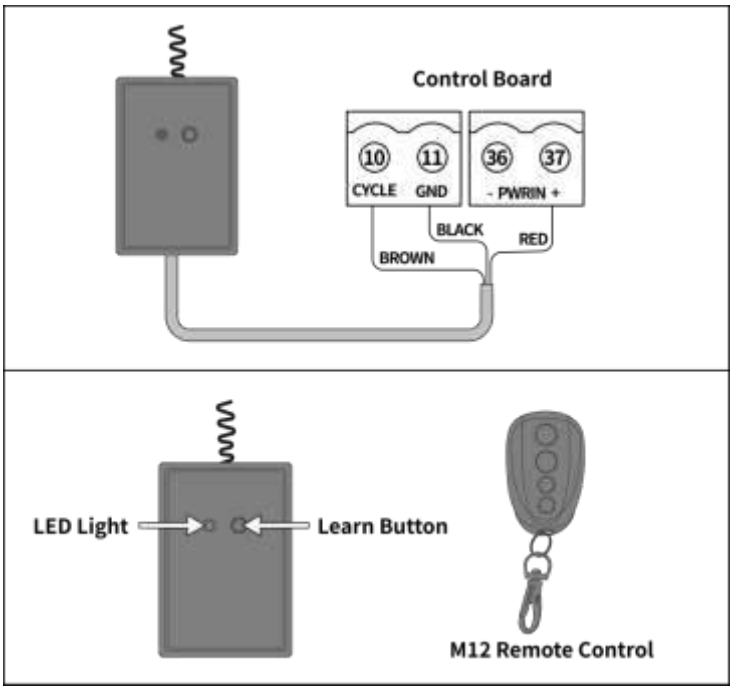

Program the Remote Control with the Receiver

- Before programming, ensure the M12 or TC131 remote control is removed from the control board to avoid conflicts.
- Press and release the Learn Button on the receiver, the LED light will turn ON. Press the remote control button you want to program once, then press it again after the LED on the remote turns off.
- The LED Light on the receiver will flash for 3 seconds and then turn OFF indicating successfully programming.

NOTE: *If the gate opener is ONLY solar powered, please add more solar panels and upgrade the battery capacity to support the additional power consumption by the receiver.*

JD24VY Warning Light

Flashing when the gate is moving, improving your gate safety

Wire Connection

- Connect the RED wire to the control board terminal ㉚ "+LAMP" .
- Connect the BLACK wire to the control board terminal ㉛ "LAMP-" .

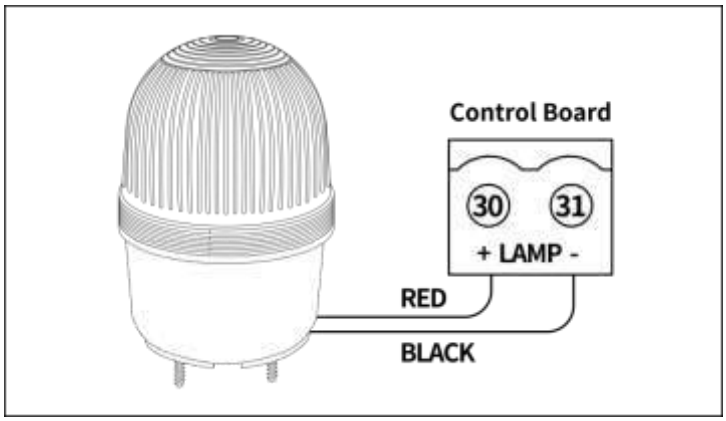

NOTE: *A 2C x 0.3 mm² (22AWG) cable is required for the wire connection, but it is NOT included.*

Connection of Accessories

TC148 Waterproof Wall Push Button & TC147 Wall Push Button

Open/close gate by pressing wired button

Wire Connection

- Connect the push button to the control board terminal ⑩ "CYCLE" and terminal ⑪ "GND" , regardless of the polarity of the wires. Each press of the button will cycle the gate through **OPEN, STOP, CLOSE, STOP, AND OPEN**.
- Connect the push button to the control board terminal ⑦ "OPN" and terminal ⑪ "GND" , regardless of the polarity of the wires. Pressing the button will only **OPEN** the gate.
- Connect the push button to the control board terminal ⑧ "CLS" and terminal ⑪ "GND" , regardless of the polarity of the wires. Pressing the button will only **CLOSE** the gate.
- Connect the push button to the control board terminal ⑨ "STOP" and terminal ⑪ "GND" , regardless of the polarity of the wires. Pressing the button will only **STOP** the gate.
- Connect the push button to the control board terminal ③ "SINGLE" and terminal ④ "GND" , regardless of the polarity of the wires. Each press of the button will cycle the master gate through open, stop, close, stop, and open.

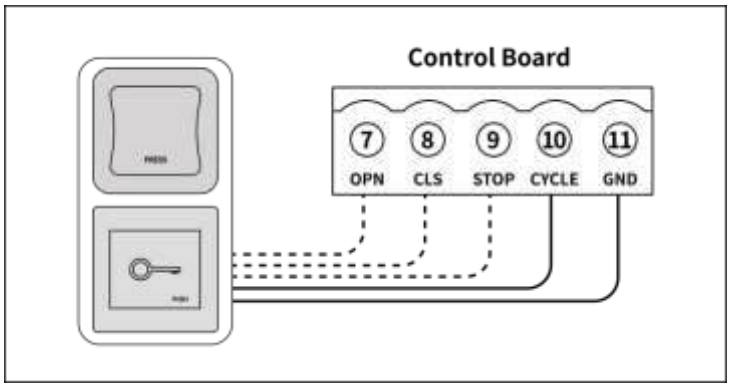

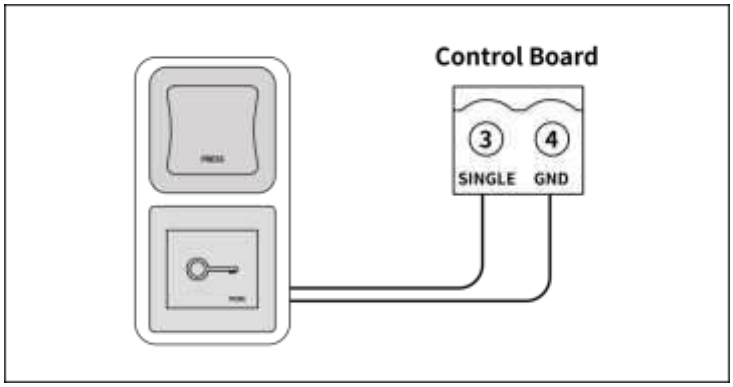

NOTE: *A 2C x 0.3 mm² (22AWG) cable is required for the wire connection, but it is NOT included.*

Maintenance and Replacement Parts

Maintenance

WARNING
Disconnect all power (AC and battery) to the gate opener before routine inspections and lubrication.

Routine Inspections

- **Inspect the Gate:** Check for any signs of damage, rust, or wear on the gate and hinges.
- **Check Gate Opener Arm:** Check that the arm is securely attached to both the gate and post brackets. Tighten any loose bolts and screws.
- **Examine Cables and Wires:** Ensure that all cables and wires are intact, without any cuts or frays.
- **Battery Maintenance:** Regularly check for battery leakage and ensure that its casing is intact. Monitor the battery voltage through the UPS01 power supply or control board. Replace the battery every 2-3 years and recycle old batteries properly.

Cleaning and Lubrication

- Using a clean, dry cloth to wipe the gate opener shaft, and then apply a silicone spray to reduce its friction.
- In cold climates where temperatures drop to 1° C (30° F) or below, apply silicone spray to the gate opener arm every 4-6 weeks to prevent freezing. Ensure the silicone freezing point is lower than the lowest local temperature.

Monthly Obstruction Test

The gate must stop or reverse upon contact with a solid object. If the stall force is adjusted, retest the gate opener by referring to the Stall Force Adjustment & Obstruction Test section in this manual. Failure to properly adjust and retest the gate opener can increase the risk of injury or death.

Replacement Parts

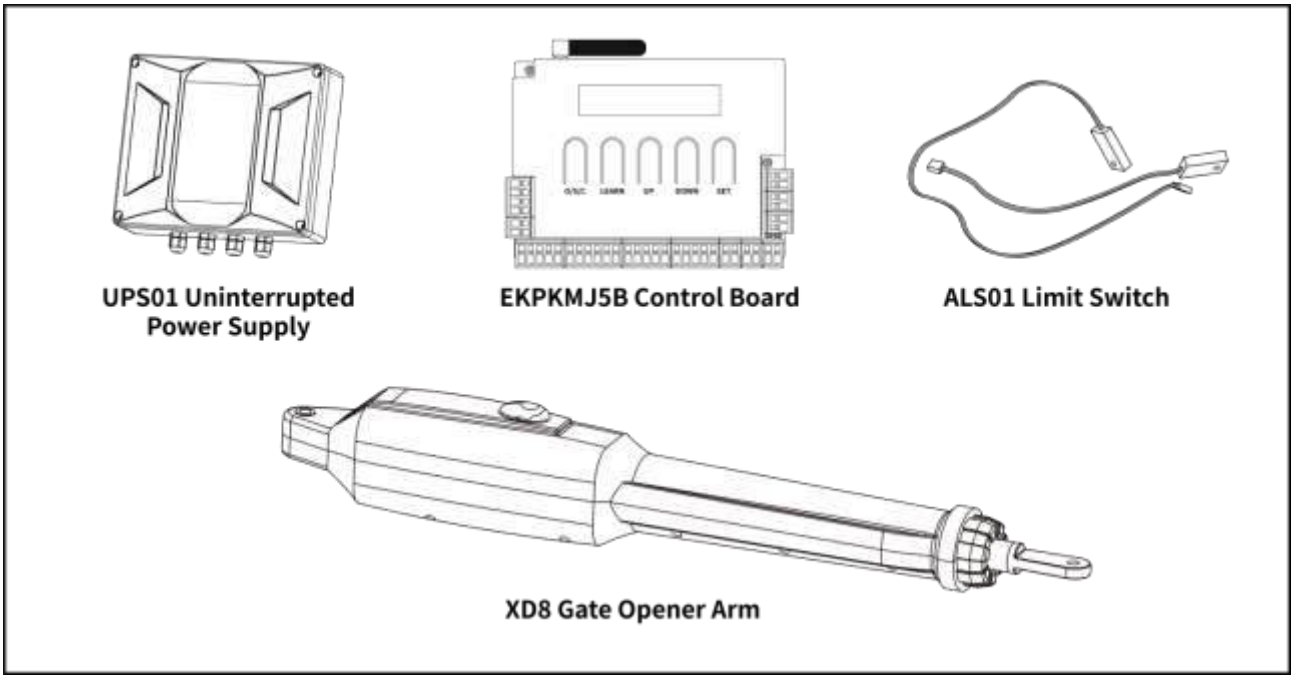

** Available on the TOPENS website (www.topens.com) and Amazon.*

Gate Opener Status Trouble Shooting

If your gate opener does not function properly after installation, please follow the steps below before contacting us for assistance. This guide provides common trouble shooting steps to help resolve issues efficiently. For further assistance, please feel free to contact us through our website at www.topens.com.

Symptom	Possible Solution(s)
Opener does not run. The LCD is not on	**Step 1 Check Connection:** Ensure that the connection between the UPS01 and the control box is correct and secure. **Step 2 Verify Power Supply:** Confirm that the UPS01 power supply is plugged into an AC main socket or that the batteries (two 12V batteries connected in series) are properly connected to the UPS01. **Step 3 Check Battery Voltage:** If only battery is used with the UPS01 to power the gate opener, ensure it is not over-discharged. The voltage should be above 22V for normal operation. Allow the battery to charge until it reaches above 22VDC. **Step 4 Inspect UPS01 Output:** Measure the output voltage of the UPS01. If it is below 21VDC while the battery voltage is above 22VDC, or if the power cord is securely plugged in, the UPS01 may be defective. **Step 5 Examine Control Board Fuse:** Check the fuse in the control board (under the black cover) and replace it with the backup fuse that comes with the gate opener if it burns out. The fuse type is 15 Amp standard automotive blade fuse. 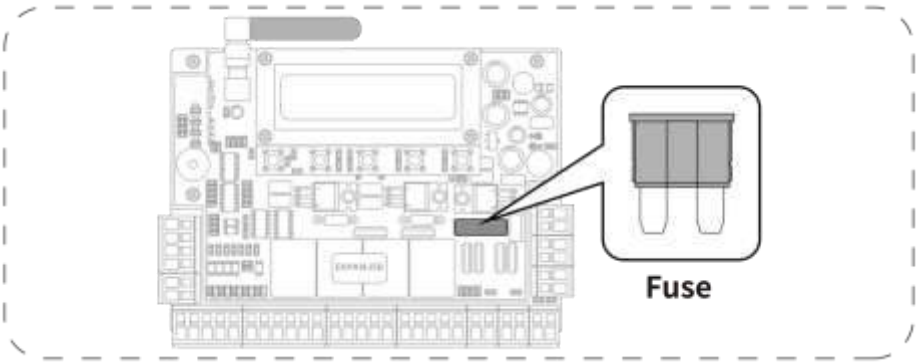 **Step 6 Check Control Board:** Inspect the control board and replace it if needed.

Gate Opener Status Trouble Shooting

Symptom	Possible Solution(s)
Opener powers up but does not run	**Step 1 Check Gate Opener Arm Wire Connection:** Inspect the gate opener arm connection cable to ensure it is not loose. Verify that all wires from the arm are securely connected to the control board terminals. **Step 2 Isolate the Issue with Wired Accessories:** Disconnect all wired accessories from the control board and disable the Safety Photocell Beam System (PBS) function refer to the section of Setting of the Control Board or TOPENS Smart Swing Gate Opener APP User Manual in this manual. Try operating the gate. If the problem disappears, the issue might be with one of the accessories. Connect each accessory one by one to identify which one causes the problem. **Step 3 Check Remote Control Programming:** Ensure that the remote control is correctly programmed to the control board. If not, refer to the Program the Remote Control section in this manual to reprogram the remote. If the remote cannot be programmed with the control board, try replacing the battery or use a new remote. **Step 4 Short the Terminal ⑩ "CYCLE" and Terminal ⑪ "GND" :** Use pliers or an electric wire to short the two terminals on the control board. If the gate can open and close but cannot be operated with the remote, try using other remotes. If none of the remotes can operate the gate opener, the control board may be faulty. Replace it with a new one.
Both gates open but do not close	**Step 1 Check Installation Type Setting:** If the gate opens into the property, set it to PULL TO OPEN (factory default setting). If the gate opens out from the property, set it to PUSH TO OPEN. Please refer to the section of Setting of the Control Board or TOPENS Smart Swing Gate Opener APP User Manual in this manual. **Step 2 Check Safety Photocell Beam System (PBS) Function Setting:** The Safety Photocell Beam System (PBS) function is enabled on control board but no sensor is not installed. Please disable the Safety Photocell Beam System (PBS) function refer to the section of Setting of the Control Board or TOPENS Smart Swing Gate Opener APP User Manual in this manual. **Step 3 Check Photocell Sensor Blockage:** Ensure that the close photocell sensor beam is not obstructed. Clear any objects blocking the photocell sensor. **Step 4 Verify Photocell Sensor Functionality:** Check if the photocell sensor is defective and properly installed.

Gate Opener Status Trouble Shooting

Symptom	Possible Solution(s)
Gate ignores the limit switches	**Step 1 Keep Motor Cable Free from Electrical Interference:** Ensure the motor cable is routed away from sources of electrical interference, such as electric fences, power lines, and similar equipment. **Step 2 Check the Limit Switch Wire Connection:** Ensure that the wires of the limit switch (BLUE, GREEN, and YELLOW wires of the arm) are not shorted. Confirm that each wire is properly inserted into its corresponding terminal and is not twisted with any other wire. **Step 3 Check the Limit Switch:** Disconnect the BLUE, GREEN, and YELLOW wires of the arm from the control board. Use two jumper wires to short the ULT, COM & DLT terminals to which the wires were connected, and then press the remote to see if the arm can extend and retract. During this test, monitor the arm to ensure it doesn't extend too far. Use the remote to reverse the direction if necessary. If the arm can move in both directions, release the COM terminal and check if the arm stops moving immediately. If the arm stops immediately, the limit switch is faulty. 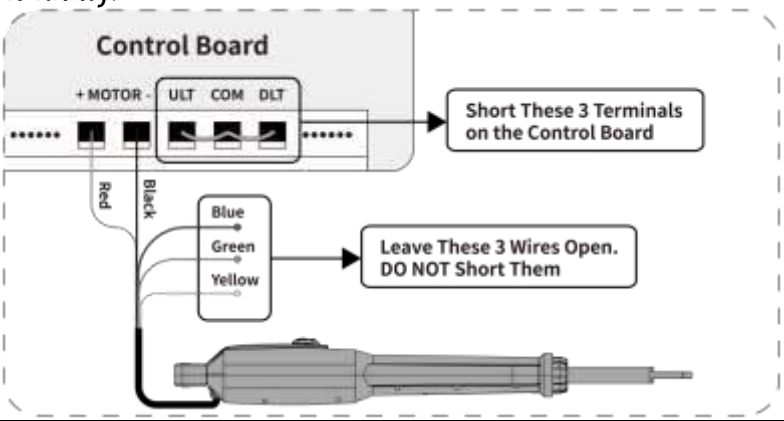
Gate stops immediately after it starts moving	**Step 1 Check for Obstruction:** An obstruction has been detected. Inspect all safety devices and the gate itself for any objects or blockages. **Step 2 Adjust Stall Force:** The stall force is low. Increase the stall force as instructed in the section of Setting of the Control Board or TOPENS Smart Swing Gate Opener APP User Manual in this manual. The stall force should be high enough for the gate to complete a full open/close cycle without stop. The stall force may need additional adjustment in cold weather, as the gate might encounter increased resistance. **Step 3 Adjust Soft Stop Period:** Slightly decrease the soft stop time as instructed in the section of Setting of the Control Board or TOPENS Smart Swing Gate Opener APP User Manual in this manual. After adjusting, use the remote control to open and close the gate through a full cycle. **Step 4 Check the Power Supply.** Incorrect power detected. Ensure that the gate opener motor is powered by 24VDC.

TOPENS Smart Swing Gate Opener APP User Manual

Download on the App Store

GET IT ON Google Play

Download “TOPENS” via App Store or Google Play

NOTE: THE TOPENS APP ONLY SUPPORTS SMARTPHONES.

PART 1 Add the Swing Gate Opener to the APP

Register a User Account

- Open the APP and tick "I agree with the 《User Agreement》 and 《Privacy Policy》" and then click "Register" to create a user account.
- Enter your mobile phone number or email address, then click "Get the verification code." Check your phone or email for the code, enter it in the APP, and set your account password. Registration is now complete.
- Finally, enter your mobile phone number or email address along with the password you set, then click "Log in" to access the APP successfully.

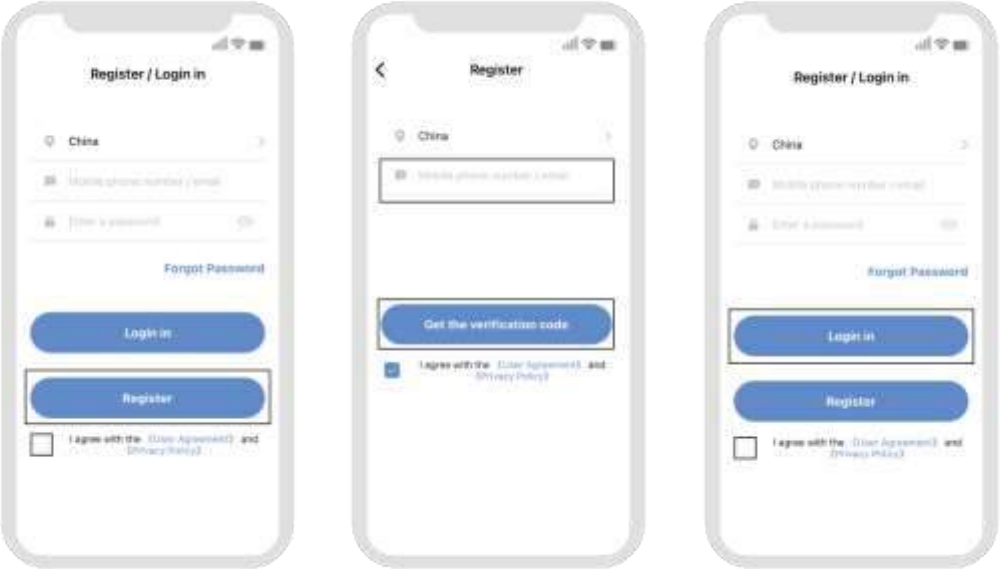

NOTE: *Ensure that location access permission is enabled on your device. The APP will automatically detect the country code from your phone's SIM card, so you do not need to enter the country code during registration.*

Preparation Before Adding to the APP

- Ensure that a Wi-Fi network is available for both your phone and the swing gate opener. Make sure your phone is already connected to the Wi-Fi network before starting the configuration.
- Power on the swing gate opener and the LCD on the control board will display "NETWOTK UNCONFIG", "MOTOR STOP".

NOTES:

- *Please ensure that your Wi-Fi is set to 2.4GHz mode, as 5GHz is not supported.*
- *If there is no Wi-Fi signal or the signal is weak near the gate opener, move your router closer to the gate opener to reduce interference from walls and other objects, or consider using a Wi-Fi range extender.*

PART 1 Add the Swing Gate Opener to the APP

Add the Swing Gate Opener Via Bluetooth and Hotspot

Open the APP and click the "+" or "Add Device" button to add a new swing gate opener. You can configure the swing gate opener to your Wi-Fi network using either Bluetooth or hotspot connection.

NOTE: *If the device has been paired with another mobile phone and you wish to re-pair it, reset the device using the "NETWORK CONFIG" setting on the control board. This will enable the device to enter network configuration mode.*

ADD THE SWING GATE OPENER TO THE APP VIA BLUETOOTH

Only the user who binds the swing gate opener through Bluetooth can still control the gate opener via Bluetooth if the Wi-Fi connection is lost. Other users who are shared cannot control the opener through Bluetooth. Additionally, adding the device through other modes does not provide this function.

STEP 1: Please enable Bluetooth permission and ensure that Bluetooth is turned on.

STEP 2: Enter the Wi-Fi name and password, then click "Next". The APP will automatically detect the swing gate opener.

NOTE: *Please ensure that your Wi-Fi is set to 2.4GHz mode, as 5GHz is not supported.*

PART 1 Add the Swing Gate Opener to the APP

STEP 3: Select the swing gate opener you want to add and click "Next".
STEP 4: The APP will begin adding the device, please wait for a moment. Once the swing gate opener is successfully added, it will appear in the main interface.

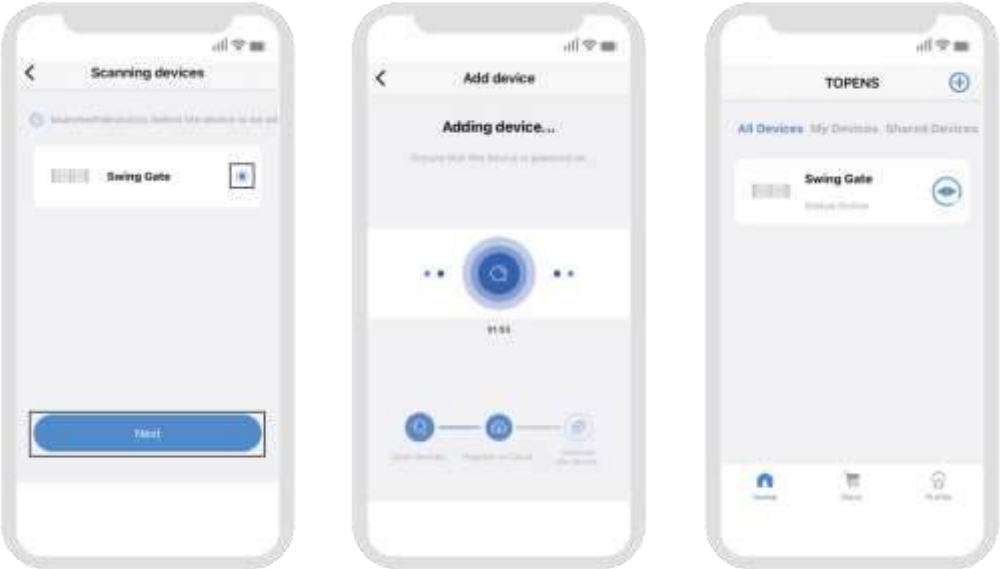

ADD THE SWING GATE OPENER TO THE APP VIA HOTSPOT

STEP 1: Close the popup notification that reminds you to enable Bluetooth and proceed with the following steps.
STEP 2: Input your Wi-Fi network name & password in the provided fields and click "Next".
STEP 3: Select the swing gate opener you need to add and click "Next".

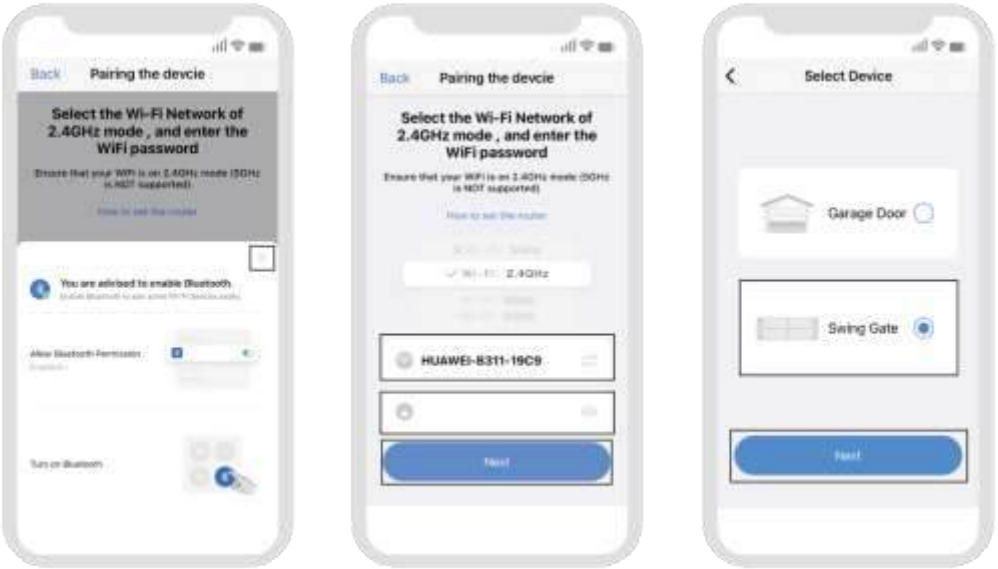

***NOTE:** Please ensure that your Wi-Fi is set to 2.4GHz mode, as 5GHz is not supported.*

PART 1 Add the Swing Gate Opener to the APP

STEP 4: Ensure that the swing gate opener is powered on, press and hold the "SET" button on the control board for 3 seconds until the LCD indicates entering the setting menu. Select "1.NETWORK CONFIG", then press "SET" button to enter network setting. When LCD flashes with "CONFIRM?", press "SET" button to confirm. Select "HOTSPOT MODE", then press "SET" button. The LCD will show "NETWORK IS BEING CONFIG…", indicating that the hotspot mode is being activated.

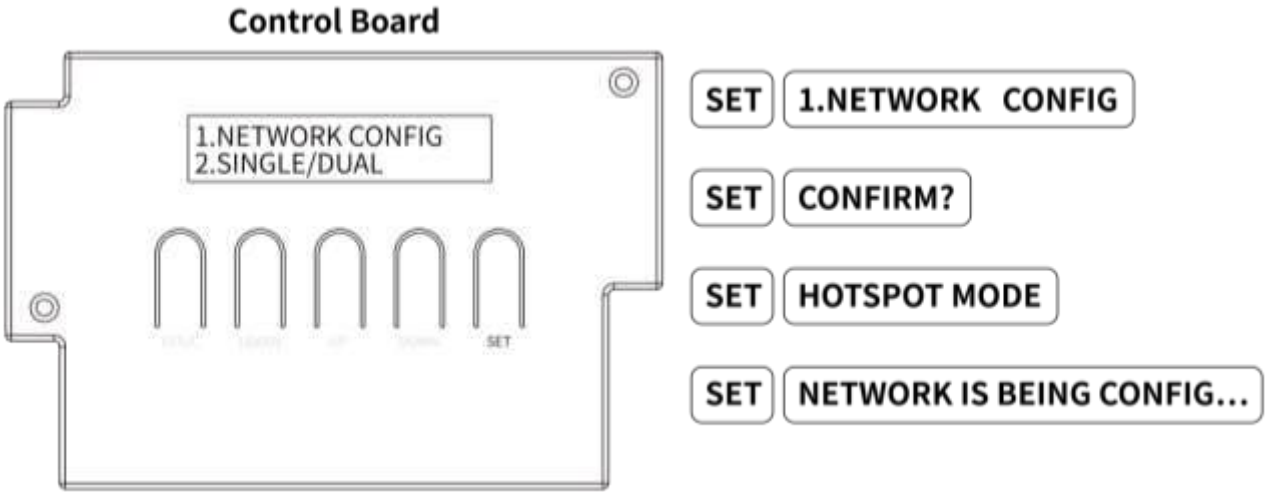

STEP 5: Tick the checkbox labeled "Confirm that the LCD Display indicates "NETWORK IS BEING CONFIG…" " on the APP interface and then click "Next".

STEP 6: Click "Connect" in the APP. This will redirect you to the WLAN network connection interface. Locate the WLAN network named "SmartLife-XXXX" or "SL-XXXX". Select the network and connect to it. This step sends the configuration parameters to the swing gate opener for setup.

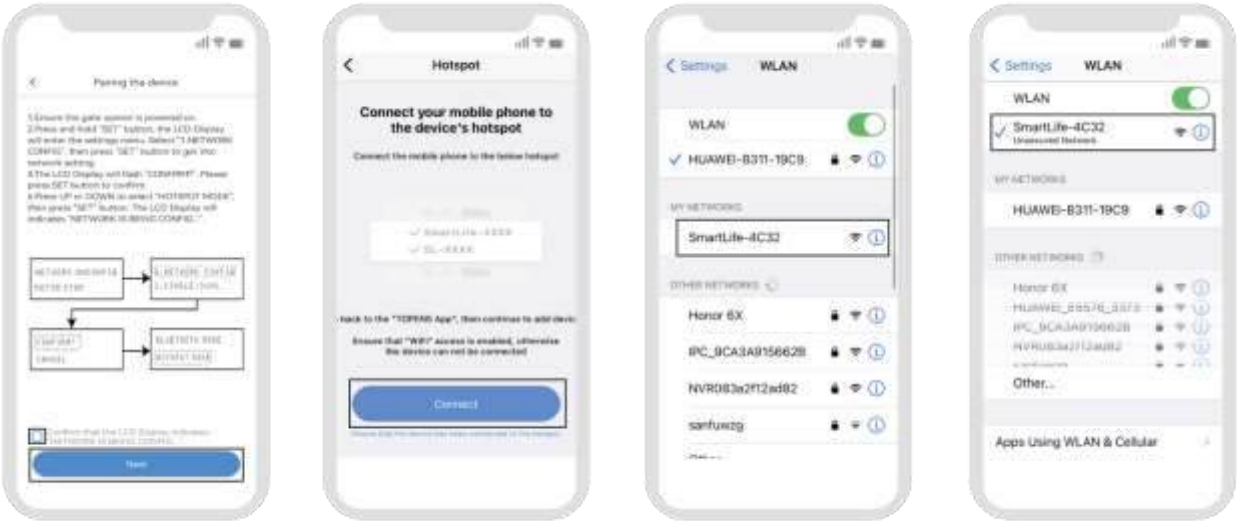

STEP 7: After connecting to the "SmartLife-XXXX" or "SL-XXXX" WLAN network, return to the APP and click "Connect". The APP will start adding the swing gate opener to your account. Please wait for the process to complete. Once the swing gate opener is successfully added, it will appear on the main interface of the APP.

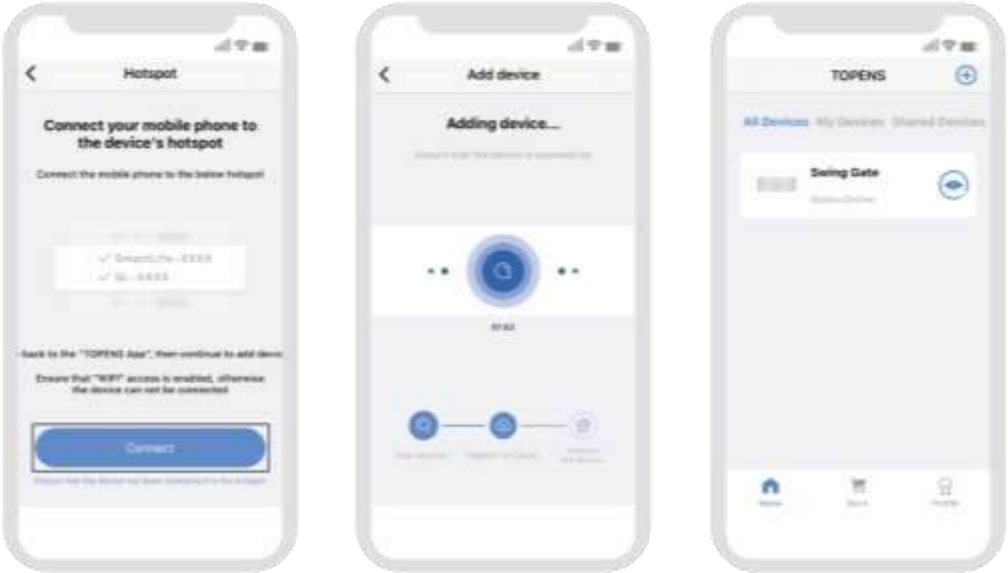

Home Interface

- Open the APP and on the Home interface you can view all the added devices including shared devices.
- On the right side of the device icon, there is a hotkey that allows you to control the swing gate opener. Each press of the hotkey will cycle the gate through open, stop, close, stop, and open.
- Click "+" to add other gate openers. In this interface, "My Devices" refers to the devices added by the users, and "Shared Devices" refers to the devices shared by other users.
- Click on the swing gate opener you have added, you will be directed to the main control interface of the swing gate opener.

Store Interface

- Click "Store" at the bottom, and you will be redirected to TOPENS's Amazon store.

Profile Interface

- Click "Profile" at the bottom, and you will be directed to the profile main interface.

Personal Information Interface

- Click the arrow at the top to enter the personal information interface.
- In this interface, you can modify your personal information, such as profile photo, nickname, contact information, address and more.
- You can also modify the password and log out of the current account from this interface.

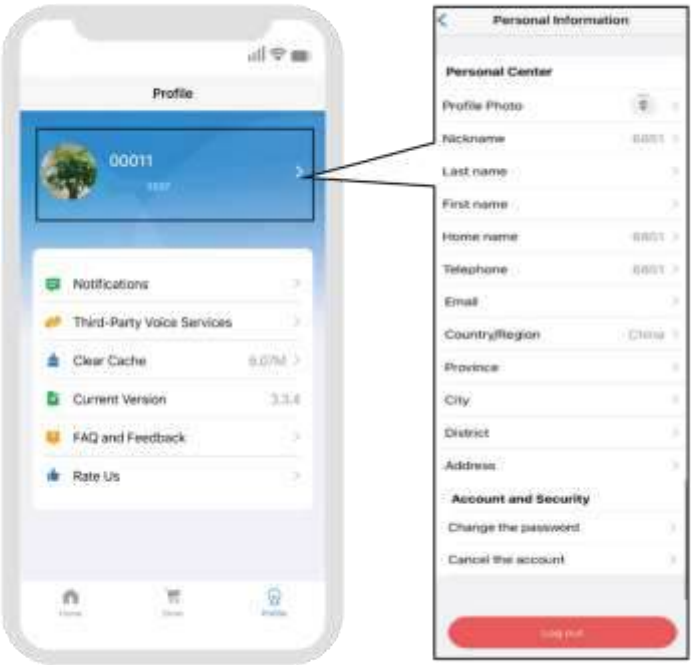

Notification Center

- Click "Notification Center" and the APP will navigate to the Notification Center.
- The Notification Center logs the alarms, device updates, bulletins, and system notifications you have received.
- Click the icon in the upper right corner to enable or disable notifications.

Third-Party Voice Services

- Click "Third-Party Voice Services" and select either "Amazon Alexa" or "Google Assistant" to bind the service to your account.
- After binding, you can control the swing gate opener using voice commands.

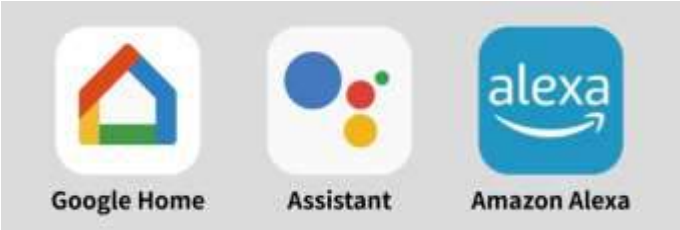

NOTE: *If you're using ALEXA for binding, make sure you've downloaded the "Amazon Alexa" APP. If you're using Google Assistant for binding, ensure you've downloaded the "Google Home" and "Google Assistant" APPs. Additionally, make sure you've registered and logged into your account on the relevant APP.*

BIND WITH AMAZON ALEXA

- Click "Amazon Alexa" and then click "Link with Amazon Alexa". A confirmation window will appear and click "LINK".

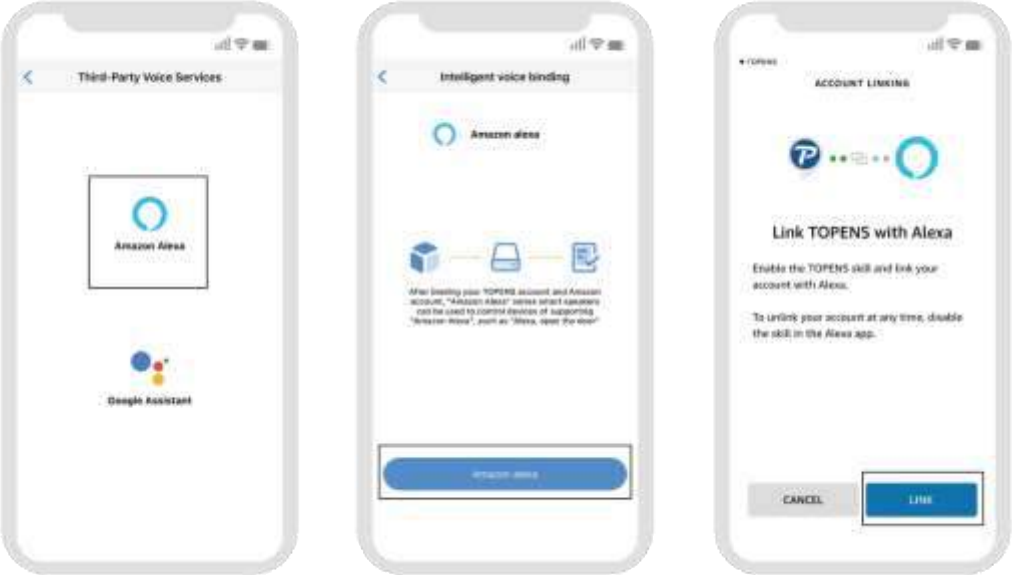

- Click "Agree and link". The APP will show that you have successfully connected with "Amazon Alexa". Open the "Amazon Alexa" APP, and you will find the swing gate opener in the Devices interface.

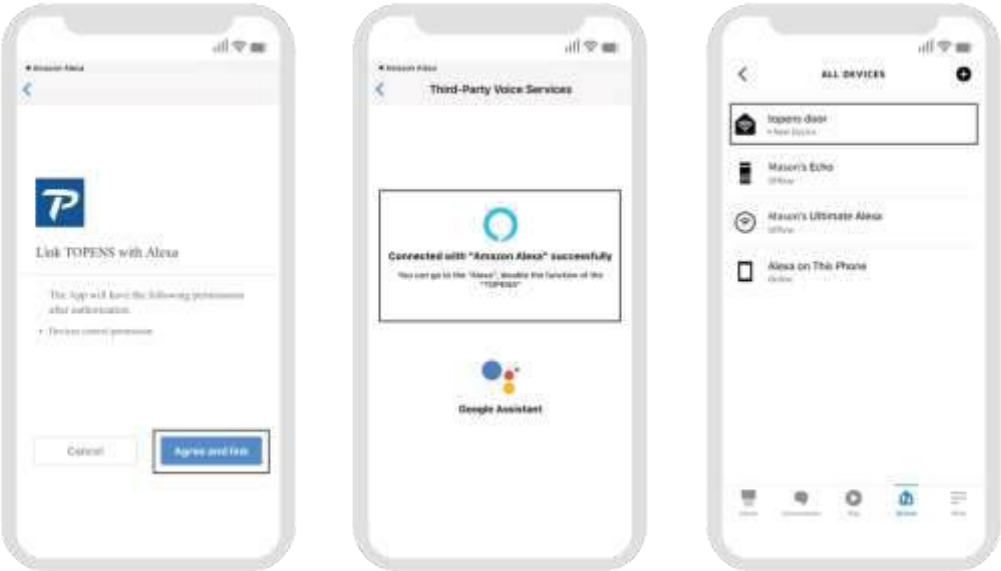

- Then, you can use the Amazon Alexa to control the swing gate opener.
- The following are voice commands to control the swing gate opener.
  Open the swing gate opener: Open "the name of the device" / "The name of the device" open / Set "the name of the device" to open
  Close the swing gate opener: Close "the name of the device" / "The name of the device" close / Set "the name of the device" to close
  Stop the swing gate opener: Set "the name of the device" to pause

BIND WITH GOOGLE ASSISTANT

- Click "Google Assistant" and then click "Link with Google Assistant". The APP will redirect you to the "Google Home" APP.
- A popup will appear to confirm the connection, please click "Agree and link". Then, choose the device you want to connect and click "Next".

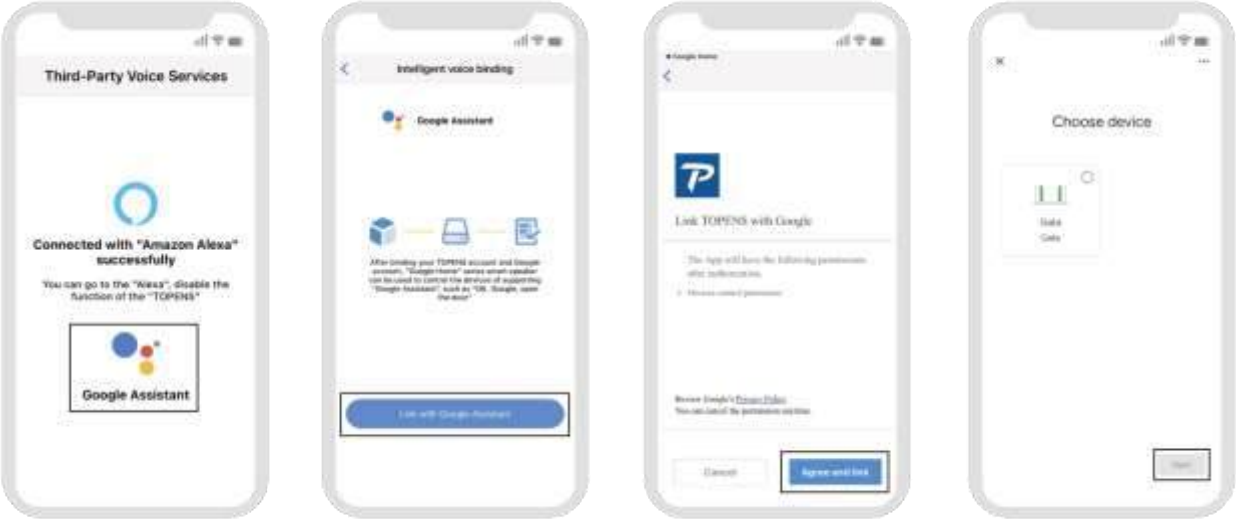

- After the connection is successful, the connected device will appear on the home page. Return to TOPENS APP, where it will display "Connected with "Google Assistant" successfully". Click "Set up security code" to create a security code and then click "Confirm". When using Google Assistant to control the swing gate opener to open, you must say the correct security code to successfully open the gate.

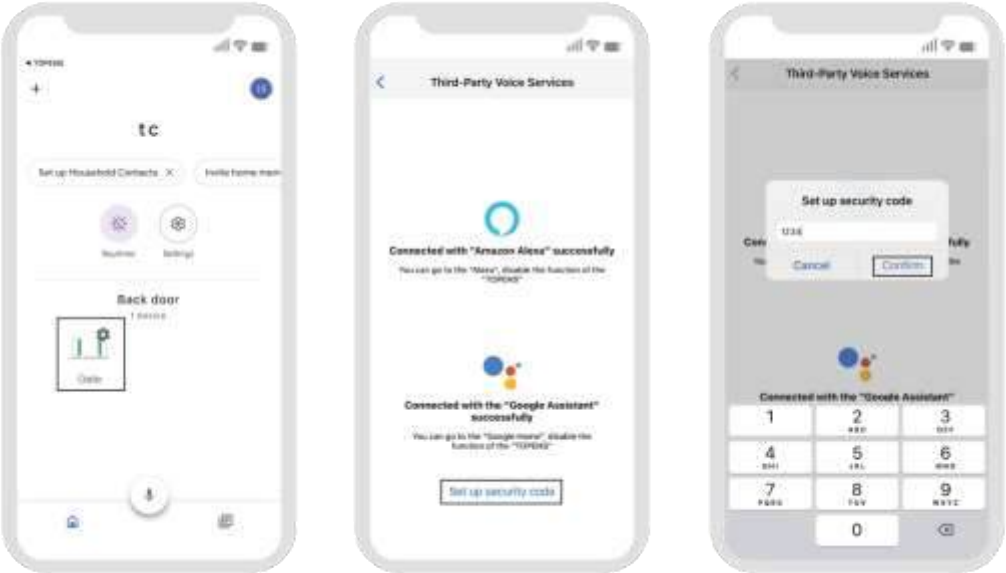

- The following are voice commands to control the swing gate opener.
  Open the swing gate opener: Open "the name of the device"
  Close the swing gate opener: Close "the name of the device"
  Stop the swing gate opener: Set "the name of the device" to pause

Clear Cache

◆ Click "Clear Cache" to remove stored cache data.

Current Version

◆ Display current version information.

FAQ and Feedback

◆ Click "FAQ and Feedback" to access a list of common questions and answers. For additional assistance, click "Contact Tech Support" to reach technical support.

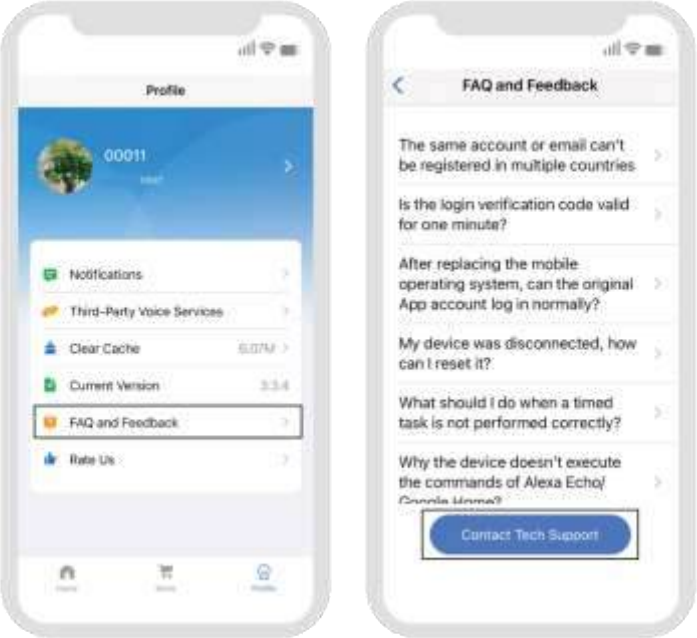

Rate Us

◆ Click "Rate Us", and the APP will redirect you to the App Store, where you can leave a rating and review for the APP.

Open the APP and click the swing gate opener you have added. It will direct to the main control interface of the swing gate opener. At the bottom of the interface, you will see three icons labeled Controller, Settings, and Q&A.

Basic Functions of the Controller Interface

①Change the Device Name and Icon, Check Device Information, Set Offline Notification, Check Device Network, Device Update and Remove Device.

②Display the current status of the swing gate opener and the current location of the swing gate opener as percentage. 100% means the gate is fully open and 0% means the gate is fully closed.

NOTE: *When powering up the swing gate opener for the first time, it is important to allow the gate to complete a full cycle (fully closed, fully opened, and fully closed again). This process is necessary to record the travel data, which helps the system calibrate the gate's movement.*

③To operate the gate opener to a specific position, simply drag the red curved line located below the gate opener animation to the desired position.

④Display the alarm status of the gate opener.

⑤Press the "Open" "Stop" or "Close" buttons to operate the master gate accordingly, allowing it to open, stop, or close as needed.

⑥Press the "Open" "Stop" or "Close" buttons to operate both the master gate and the slave gate, allowing them to open, stop, or close as needed.

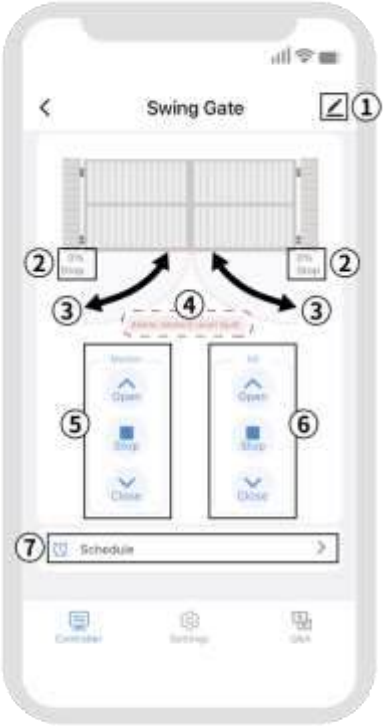

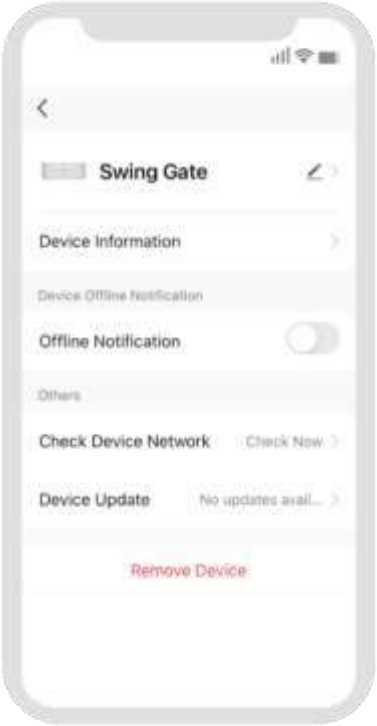

⑦Click to access the schedule configuration page. Click "Add" to set the schedule parameters, and then click "Save". The schedule will appear in the list, where you can quickly enable or disable it as needed.

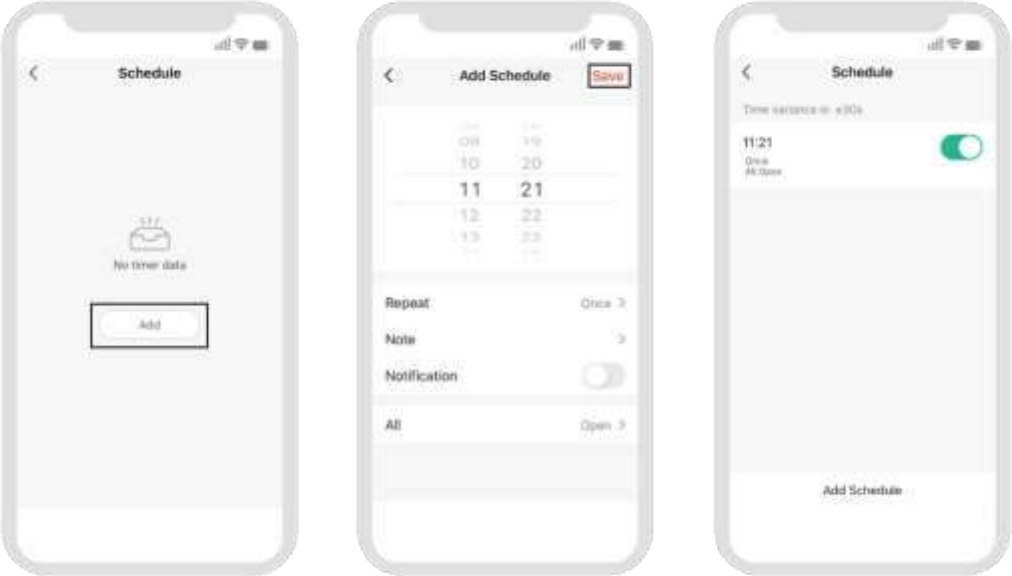

Settings of the Swing Gate Opener

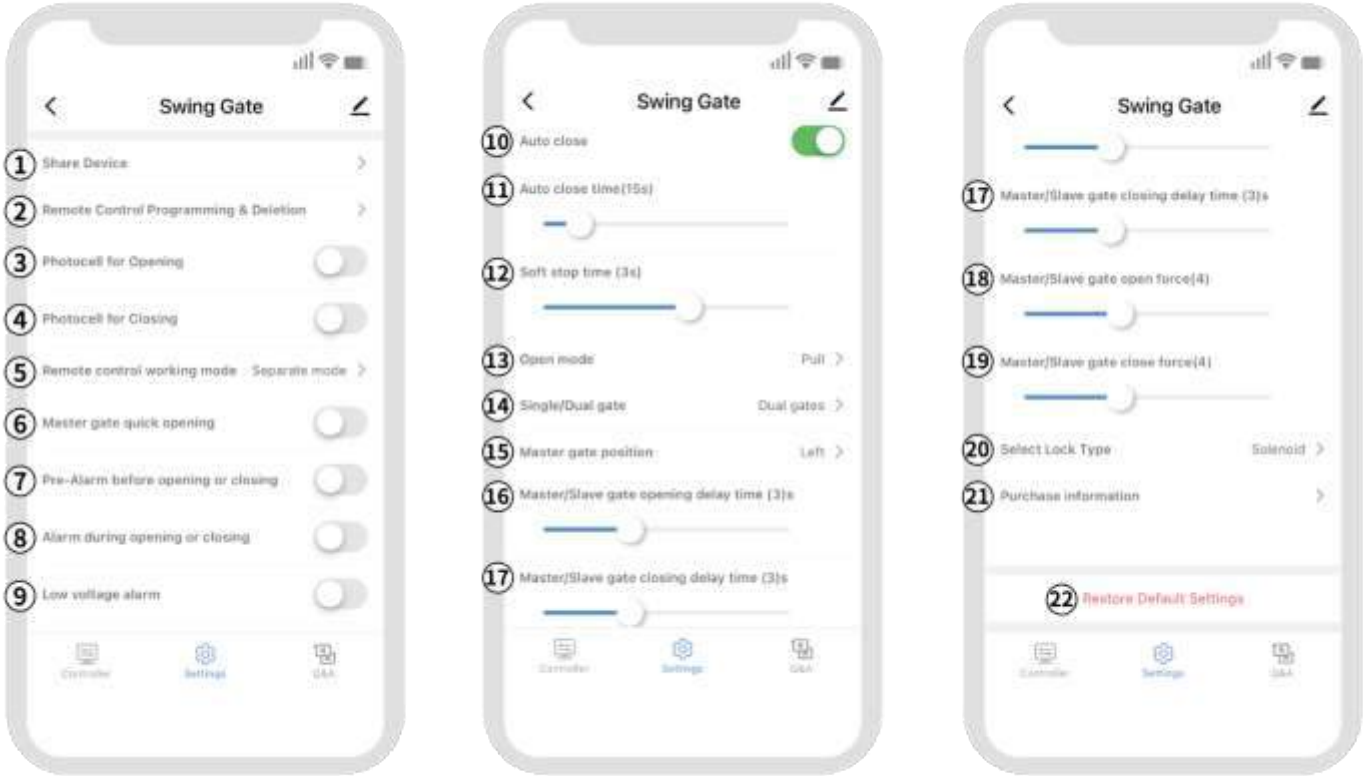

PART 3 Control and Set the Swing Gate Opener

①Share Device

Click "Add sharers" and enter the account details of the person you want to share the device with. Then, click "Search" and the APP will locate the account. Finally, select the account to share the device.

NOTE: *The shared user must download the TOPENS APP and register a user account before being shared.*

②Remote Control Programming & Deletion

Remote Programming

- **STEP 1:** Click "Remote Control Programming & Deletion", then Click "Start programming". Ensure that the distance between the remote control and the gate opener is within 5m (16.5ft.) and there are no obstructions between them. Once ready, click "Next Step" to proceed.
- **STEP 2:** Ensure the LCD shows "REMOTE CONTROL LEARNING...", indicating that the gate opener is now in programming mode. Then click "Next step".
- **STEP 3:** Press the remote control button you want to program once, then press it again after the LED on the remote turns off. The LCD will show "LEARNING SUCCESSFUL" then back to standby mode, indicating successful programming. The APP will display"Learning succeed"and you can click "Finish" to complete the programming.

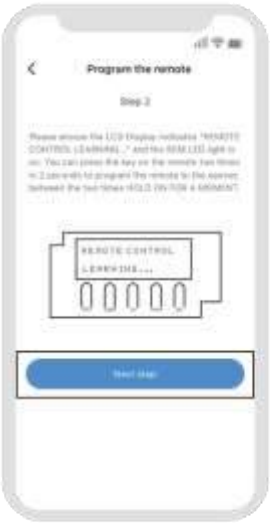

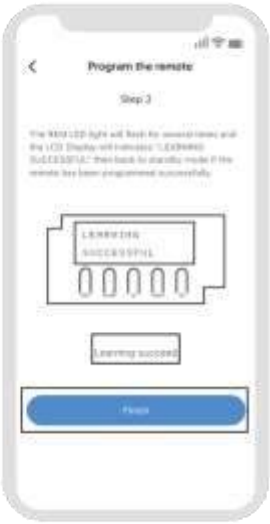

NOTE: *Please ensure that the remote is pressed after you have clicked "Next step" in STEP 2.*

Delete All the Remotes

- **STEP 1:** Click "Delete all the remotes".
- **STEP 2:** Click "Next step", then confirm the operation again.
- **STEP 3:** All the remote controls have been erased successfully if the LCD shows "DELETING SUCCESSFUL" and then back to the standby mode. The APP will display "Erasing succeed" and you can click "Finish" to complete the deletion process.

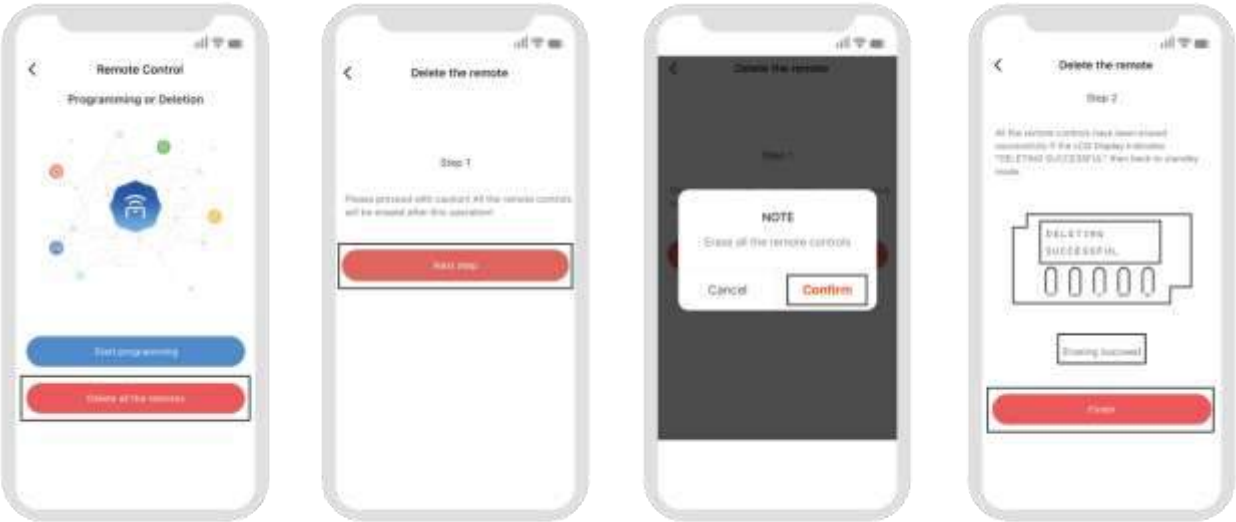

③Enable/Disable Open Safety Photocell Beam System

The gate opener will stop if the OP_PHO terminal is activated (changes from normally closed to normally open).

④Enable/Disable Close Safety Photocell Beam System

The gate opener will return to its open position if the CL_PHO terminal is activated (changes from normally closed to normally open).

⑤Set Remote Control Working Mode

ONE BUTTON MODE: Button A, B and C share the same function. Each press of the programmed button will cycle the gate through open, stop, close, stop, and open.
SEPARATE MODE: After successful programming, press button A to open the gate, press button B to close the gate, press button C to stop the gate.

⑥Enable/Disable Master Gate Quick Opening

Pressing the "D" button on the programmed remote control will quickly open the master gate.

NOTE: *The master gate can operate independently only when the slave gate is fully closed.*

⑦Enable/Disable Pre-alarm Before Opening or Closing

The built-in alarm will sound intermittently 4 seconds before the gate begins opening or closing.

⑧Enable/Disable Running Alarm When Gate Opening or Closing

The built-in alarm will sound intermittently during gate opening or closing to provide an alert of gate movement.

⑨Enable/Disable Low Voltage Alarm

The built-in alarm will sound intermittently when the input voltage drops below 21V.

⑩Enable/Disable Auto Close Function

The auto close function allows the gate to automatically close after a set period.

⑪Set Auto Close Time

Slide the button to set the auto close time. The auto close time can be adjusted from 3 to 120 seconds after enabling the "Auto Close" function.

⑫Set Soft Stop Time

Slide the button to set the soft stop time. The soft stop time can be adjusted from 0 to 5 seconds. Selecting "0" means the gate opener will not perform a soft stop.

⑬Set Open Mode: Pull-to-Open/Push-to-Open

Please set the open mode to match your installation.

⑭Set Single/Dual Gate

Please set it to match your installation.

NOTE: *Single/Dual Gate setting must be consistent with the actual use of the gate opener. Otherwise, the gate opener will report an error when you use it, which affects the normal operation of the gate opener.*

⑮Set Master Gate Position: Left/Right

This operation adjusts the position of the master gate on the main operation page. Please set it to match your installation.

⑯Set Open Delay Time between Master and Slave Gate

Slide the button to set the open delay time. The interval time can be adjusted from 0 to 9 seconds. "0" means the master and slave gates open simultaneously.

⑰Set Close Delay Time between Master and Slave Gate

Slide the button to set the close delay time. The interval time can be adjusted from 0 to 9 seconds. "0" means the master and slave gates close simultaneously.

⑱Set Open Stall Force

Slide the button to set the open stall force. "1" represents the minimum force, while "9" represents the maximum force.

⑲Set Close Stall Force

Slide the button to set the close stall force. “1” represents the minimum force, while “9” represents the maximum force.

⑳Set Lock Terminal Working Mode

Please set it to match your lock type.
SOLENOID: The lock terminal provides a 24VDC output only during the first 4 seconds of the gate opener's opening cycle. At all other times, the lock terminal has no output.
ELECTROMAGNETIC: The lock terminal provides a 0V output only during the first 4 seconds of the gate opener's opening cycle. At all other times, there is an output of 24V from the lock terminal.

㉑Purchase Information

It is recommended to fill in the purchase information if you need technical support.

㉒Restore Default Settings

All the data will return to default settings.

Q&A Interface

Click “Q&A” to download the user manual and find troubleshooting for common issues.
Click “Contact Tech Support” to receive technical support. For first-time users, it will prompt you to fill in the purchase information.

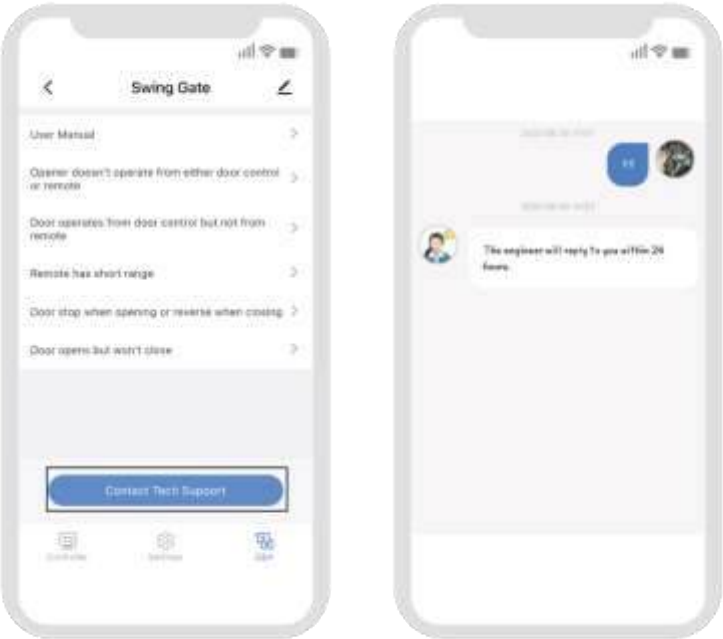

NOTE: *Technical support does not offer real-time responses. Customer service staff typically reply within 24 hours.*

©2024-2027 All Rights Reserved

T: 0086-27-8700 1865
E-mail: agc.wuhan@agc-cert.com
Web: Http://www.agc-cert.com

Room 102, 1st-2nd floor of Building 3, Wuhan Jinneng Windpower Industrial Park, No.9 Zhulin Road, Fozuling Street, Wuhan East Lake High-tech Development Zone, China

Attestation of Conformity

Applicant	Hangzhou Sanford Technology Co., Ltd Room 106, Building 4, 8 Shengdi Road, Yuhang Town, Hangzhou City, Zhejiang Province, China
Product Designation	SWING GATE OPENER
Brand Name	/
Model / Series Models	XD851, XD852
Manufacturer	Hangzhou Sanford Technology Co., Ltd Room 106, Building 4, 8 Shengdi Road, Yuhang Town, Hangzhou City, Zhejiang Province, China

Requirement	Applied Standards	Document Evidence	Result
EMC Directive	EN 55014-1:2017+A11:2020 EN 55014-2:2015 EN IEC 61000-3-2:2019 EN 61000-3-3:2013+A1:2019	Test Report: AGC-WH00066210827EE01	Conform

CE

Attestation of Global Compliance (Wuhan) Co., Ltd.

Bram Wu

Signed by General Manager(Bram Wu)
Issue Date: September 2, 2021

This Attestation of Conformity is recognized by Attestation of Global Compliance (Wuhan) Co., Ltd. and made in accordance with the Electromagnetic Compatibility (EMC) Directive 2014/30/EU. The attestation doesn't imply assessment of the production. The Applicant of the attestation is authorized to use this attestation in connection with EC declaration of conformity to the Directive. The attestation is only applicable to the equipments described above. This attestation shall not be re-produced except in full without the written approval of Attestation of Global Compliance (Wuhan) Co., Ltd.
Note: This attestation is part of the full test report(s) and should be used in conjunction with it.

Version: 1.0

T: 0086-27-8700 1865
E-mail: agc.wuhan@agc-cert.com
Web: Http://www.agc-cert.com

Room 102, 1st-2nd floor of Building 3, Wuhan Jinneng Windpower Industrial Park, No.9 Zhulin Road, Fozuling Street, Wuhan East Lake High-tech Development Zone, China

Attestation of Conformity

Applicant	Hangzhou Sanford Technology Co., Ltd.
	Room 106, Building 4, 8 Shengdi Road, Yuhang Town, Hangzhou City, Zhejiang Province, China
Product Designation	SWING GATE OPENER
Brand Name	/
Model / Series Models	XD851, XD852
Manufacturer	Hangzhou Sanford Technology Co., Ltd.
	Room 106, Building 4, 8 Shengdi Road, Yuhang Town, Hangzhou City, Zhejiang Province, China

Requirement	Applied Standards	Document Evidence	Result
LVD Directive	EN 60335-2-103:2015, EN 60335-1:2012 +A11:2014+A13:2017+A1:2019+A2:2019+A14:2019, EN 62233:2008	Test Report: AGC-WH00066210827ES01	Conform

CE

Signed by General Manager (Bram Wu)
Issue Date: September 2, 2021

Attestation of Global Compliance (Wuhan) Co., Ltd.

This Attestation of Conformity is recognized by Attestation of Global Compliance (Wuhan) Co., Ltd. and made in accordance with the Low Voltage Directive 2014/35/EU. The attestation doesn't imply assessment of the production. The Applicant of the attestation is authorized to use this attestation in connection with EC declaration of conformity to the Directive. The attestation is only applicable to the equipments described above. This attestation shall not be re-produced except in full without the written approval of Attestation of Global Compliance (Wuhan) Co., Ltd.
Note: This attestation is part of the full test report(s) and should be used in conjunction with it.

Version: 1.0

T: 0086-27-8700 1865
E-mail: agc.wuhan@agc-cert.com
Web: Http://www.agc-cert.com

Room 102, 1st-2nd floor of Building 3, Wuhan Jinneng Windpower Industrial Park, No.9 Zhulin Road, Fozuling Street, Wuhan East Lake High-tech Development Zone, China

Attestation of Conformity

Applicant	Hangzhou Sanford Technology Co., Ltd Room 106, Building 4, 8 Shengdi Road, Yuhang Town, Hangzhou City, Zhejiang Province, China
Product Designation	SWING GATE OPENER
Brand Name	/
Model / Series Models	XD851, XD852
Manufacturer	Hangzhou Sanford Technology Co., Ltd Room 106, Building 4, 8 Shengdi Road, Yuhang Town, Hangzhou City, Zhejiang Province, China

Requirement	Applied Standards	Document Evidence	Result
Electromagnetic Compatibility Regulations 2016	BS EN 55014-1:2017+A11:2020 BS EN 55014-2:2015 BS EN IEC 61000-3-2:2019 BS EN 61000-3-3:2013+A1:2019	Test Report: AGC-WH00066210827BE02	Conform

UK CA

Attestation of Global Compliance (Wuhan) Co., Ltd.

Bram Wu

Signed by General Manager(Bram Wu)
Issue Date: September 2, 2021

Recognized by Attestation of Global Compliance (Wuhan) Co., Ltd. in accordance with the Electromagnetic Compatibility Regulations 2016. The attestation doesn't imply assessment of the production. The applicant of the attestation is authorized to use this attestation in connection with UK declaration of conformity to the regulation. The attestation is only applicable to the equipment described above. This attestation shall not be re-produced without the written approval of Attestation of Global Compliance (Wuhan) Co., Ltd.
Note: This attestation is part of the full test report(s) and should be used in conjunction with it.

Version: 1.0

T: 0086-27-8700 1865
E-mail: agc.wuhan@agc-cert.com
Web: Http://www.agc-cert.com

Room 102, 1st-2nd floor of Building 3, Wuhan Jinneng Windpower Industrial Park, No.9 Zhulin Road, Fozuling Street, Wuhan East Lake High-tech Development Zone, China

Attestation of Conformity

Applicant	Hangzhou Sanford Technology Co., Ltd.
	Room 106, Building 4, 8 Shengdi Road, Yuhang Town, Hangzhou City, Zhejiang Province, China
Product Designation	SWING GATE OPENER
Brand Name	/
Model / Series Models	XD851, XD852
Manufacturer	Hangzhou Sanford Technology Co., Ltd.
	Room 106, Building 4, 8 Shengdi Road, Yuhang Town, Hangzhou City, Zhejiang Province, China

Requirement	Applied Standards	Document Evidence	Result
Electrical Equipment (Safety) Regulations 2016	BS EN 60335-2-103:2015, BS EN 60335-1:2012+ A11:2014+A13:2017+A1:2019+A2:2019+A14:2019, BS EN 62233:2008	Test Report: AGC-WH00066210827BS02	Conform

UK CA

Signed by General Manager(Bram Wu)
Issue Date: September 2, 2021

Attestation of Global Compliance (Wuhan) Co., Ltd.

Recognized by Attestation of Global Compliance (Wuhan) Co., Ltd. in accordance with the Electrical Equipment (Safety) Regulations 2016. The attestation doesn't imply assessment of the production. The applicant of the attestation is authorized to use this attestation in connection with UK declaration of conformity to the regulation. The attestation is only applicable to the equipment described above. This attestation shall not be re-produced without the written approval of Attestation of Global Compliance (Wuhan) Co., Ltd.
Note: This attestation is part of the full test report(s) and should be used in conjunction with it. Version: 1.0

FCC Statement

This equipment has been tested and found to comply with the limits for a Class B digital device, pursuant to Part 15 of the FCC Rules. These limits are designed to provide reasonable protection against harmful interference in a residential installation. This equipment generates uses and can radiate radio frequency energy and, if not installed and used in accordance with the instructions, may cause harmful interference to radio communications. However, there is no guarantee that interference will not occur in a particular installation. If this equipment does cause harmful interference to radio or television reception, which can be determined by turning the equipment off and on, the user is encouraged to try to correct the interference by one or more of the following measures:

-- Reorient or relocate the receiving antenna.

-- Increase the separation between the equipment and receiver.

-- Connect the equipment into an outlet on a circuit different from that to which the receiver is connected.

-- Consult the dealer or an experienced radio/TV technician for help.

This device complies with part 15 of the FCC Rules. Operation is subject to the following two conditions: (1) This device may not cause harmful interference, and (2) this device must accept any interference received, including interference that may cause undesired operation.

Changes or modifications not expressly approved by the party responsible for compliance could void the user's authority to operate the equipment.

This equipment complies with FCC radiation exposure limits set forth for an uncontrolled environment.

This equipment should be installed and operated with minimum distance 20cm between the radiator & your body.

According to Waste of Electrical and Electronic Equipment (WEEE) directive, WEEE should be separately collected and treated. If at any time in future you need to dispose of this product, please do NOT dispose of this product with household waste. Please send this product to WEEE collecting points where available.

Feedback & Review

Your comments and suggestions are important to us as they help us provide the best possible service. Should you have any need to contact us, the info below will help you get in touch:

TOPENS Website

www.topens.com

Contact Us:
E-mail: support@topens.com
Kindly include your purchase channel, order #, gate information, issue description and your contact information. All your concerns will be replied within 24 hours.
Tel: +1 (888) 750 9899 (Toll Free USA & Canada)