MOUNTING

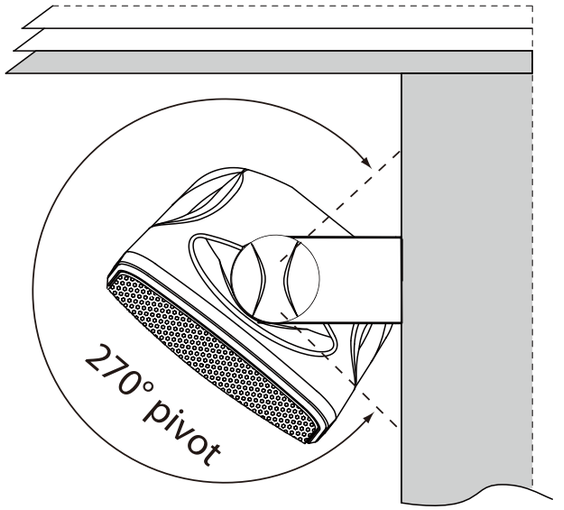

MOUNTING THE BRACKET:

(1) Remove the bracket knobs and the bracket from the speaker.
(2) Hold the bracket up to the mounting surface. The speaker can be mounted either horizontally or vertically. Hold the bracket so that the speaker wire fits through the large, circular wire hole in the bracket. Align the bracket to be square with the surroundings (use a level for accuracy).
(3) Mark the locations of the three shaped screw holes. Use all of the holes.
(4) Drill pilot holes into the mounting surface.
(5) Gently pull the speaker wire through the wire hole in the center of the mounting bracket. Align the bracket so that the holes all line up.
(6) Use your hardware to attach the bracket to the mounting surface.

FINAL ADJUSTMENTS:

(1) After checking that the speaker is in-phase and works correctly, angle the speaker for the best sound.
(2) Hand tighten the bracket knobs only. Power tools may over-tighten the knob, and strip the threads of the insert.
(3) Check that the entire installation is safe and secure.

PYLE®
HYDRA

PDWR54BTB/PDWR54BTW

Waterproof & BT 5.25" Indoor / Outdoor Speaker System, 600 Watt

PDWR64BTB/PDWR64BTW

Waterproof & BT 6.5" Indoor / Outdoor Speaker System, 800 Watt

OWNER'S MANUAL

Wall Mount Speaker Models:

Model	Color	Speaker Size	Built-in BT	Marine Grade	MAX Power	RMS Power
PDWR54BTB	Black	5.25”	✓	✓	600	300
PDWR54BTW	White	5.25”	✓	✓	600	300
PDWR64BTB	Black	6.5”	✓	✓	800	400
PDWR64BTW	White	6.5”	✓	✓	800	400

PDWR54BTB-Black

- System Includes (2) Speakers
- Active & Passive Speaker System
- Built-in 2 Channel Amplifier
- BT Wireless Music Streaming
- Marine Grade waterproof Construction
- 2-Way Full Range Stereo Sound
- Custom Tooled Design for High Power and Deep Bass Response
- Removable & Rust Proof Aluminum Speaker Grills
- Gold Plated Speaker Plug Terminals
- RCA(L/R) Audio Input Connector Jacks
- Single RCA Speaker Output Connector Jack
- Rotary Volume Control
- Spring Loaded Mounting Bracket Included
- Heavy Duty Engineered Plastic Cabinet
- Built-in Capacitor Speaker Protection
- Ability to Daisy-Chain Active Speaker to Passive Speaker as Stereo System
- Excellent for Monitor or Surround Sound Applications
- Great by the Pool, on the Patio or in the Boat
- For Indoor / Outdoor Use

Technical Specs:

- Marine Grade IP44 Rating
- 5.25'' Long Throw Woofers
- 1.0'' Polymer Dome Tweeters
- Magnet Size: 10oz.
- Cone Material: PP Mica + Rubber Surround
- 600 Watt Rated Peak Power
- 300 Watt Rates RMS Power
- Frequency Response: 90Hz-20kHz
- 4 Ohm Impedance
- Dimensions (L x W x H): 5.75'' x 7.09'' x 9.88''
- Weight : 9.5 lbs.
- Sold as: Pair

PDWR54BTW-White

- System Includes (2) Speakers
- Active & Passive Speaker System
- Built-in 2 Channel Amplifier
- BT Wireless Music Streaming
- Marine Grade waterproof Construction
- 2-Way Full Range Stereo Sound
- Custom Tooled Design for High Power and Deep Bass Response
- Removable & Rust Proof Aluminum Speaker Grills
- Gold Plated Speaker Plug Terminals
- RCA(L/R) Audio Input Connector Jacks
- Single RCA Speaker Output Connector Jack
- Rotary Volume Control
- Spring Loaded Mounting Bracket Included
- Heavy Duty Engineered Plastic Cabinet
- Built-in Capacitor Speaker Protection
- Ability to Daisy-Chain Active Speaker to Passive Speaker as Stereo System
- Excellent for Monitor or Surround Sound Applications
- Great by the Pool, on the Patio or in the Boat
- For Indoor / Outdoor Use

Technical Specs:

- Marine Grade IP44 Rating
- 5.25'' Long Throw Woofers
- 1.0'' Polymer Dome Tweeters
- Magnet Size: 10oz.
- Cone Material: PP Mica + Rubber Surround
- 600 Watt Rated Peak Power
- 300 Watt Rates RMS Power
- Frequency Response: 90Hz-20kHz
- 4 Ohm Impedance
- Dimensions (L x W x H): 5.75'' x 7.09'' x 9.88''
- Weight : 9.5 lbs.
- Sold as: Pair

PDWR64BTB-Black

- System Includes (2) Speakers
- Active & Passive Speaker System
- Built-in 2 Channel Amplifier
- BT Wireless Music Streaming
- Marine Grade waterproof Construction
- 2-Way Full Range Stereo Sound
- Custom Tooled Design for High Power and Deep Bass Response
- Removable & Rust Proof Aluminum Speaker Grills
- Gold Plated Speaker Plug Terminals
- RCA(L/R) Audio Input Connector Jacks
- Single RCA Speaker Output Connector Jack
- Rotary Volume Control
- Spring Loaded Mounting Bracket Included
- Heavy Duty Engineered Plastic Cabinet
- Built-in Capacitor Speaker Protection
- Ability to Daisy-Chain Active Speaker to Passive Speaker as Stereo System
- Excellent for Monitor or Surround Sound Applications
- Great by the Pool, on the Patio or in the Boat
- For Indoor / Outdoor Use

Technical Specs:

- Marine Grade IP44 Rating
- 6.5'' Long Throw Woofers
- 1.0'' Polymer Dome Tweeters
- Magnet Size: 14.5 oz.
- Cone Material: PP Mica + Rubber Surround
- 800 Watt Rated Peak Power
- 400 Watt Rates RMS Power
- Frequency Response: 45Hz-20kHz
- 4 Ohm Impedance
- Dimensions (L x W x H): 7.28'' x 9.25'' x 13.0''
- Weight : 13.2 lbs.
- Sold as: Pair

PDWR64BTW-White

- System Includes (2) Speakers
- Active & Passive Speaker System
- Built-in 2 Channel Amplifier
- BT Wireless Music Streaming
- Marine Grade waterproof Construction
- 2-Way Full Range Stereo Sound
- Custom Tooled Design for High Power and Deep Bass Response
- Removable & Rust Proof Aluminum Speaker Grills
- Gold Plated Speaker Plug Terminals
- RCA(L/R) Audio Input Connector Jacks
- Single RCA Speaker Output Connector Jack
- Rotary Volume Control
- Spring Loaded Mounting Bracket Included
- Heavy Duty Engineered Plastic Cabinet
- Built-in Capacitor Speaker Protection
- Ability to Daisy-Chain Active Speaker to Passive Speaker as Stereo System
- Excellent for Monitor or Surround Sound Applications
- Great by the Pool, on the Patio or in the Boat
- For Indoor / Outdoor Use

Technical Specs:

- Marine Grade IP44 Rating
- 6.5'' Long Throw Woofers
- 1.0'' Polymer Dome Tweeters
- Magnet Size: 14.5 oz.
- Cone Material: PP Mica + Rubber Surround
- 800 Watt Rated Peak Power
- 400 Watt Rates RMS Power
- Frequency Response: 45Hz-20kHz
- 4 Ohm Impedance
- Dimensions (L x W x H): 7.28'' x 9.25'' x 13.0''
- Weight : 13.2 lbs.
- Sold as: Pair

Overall Dimensions

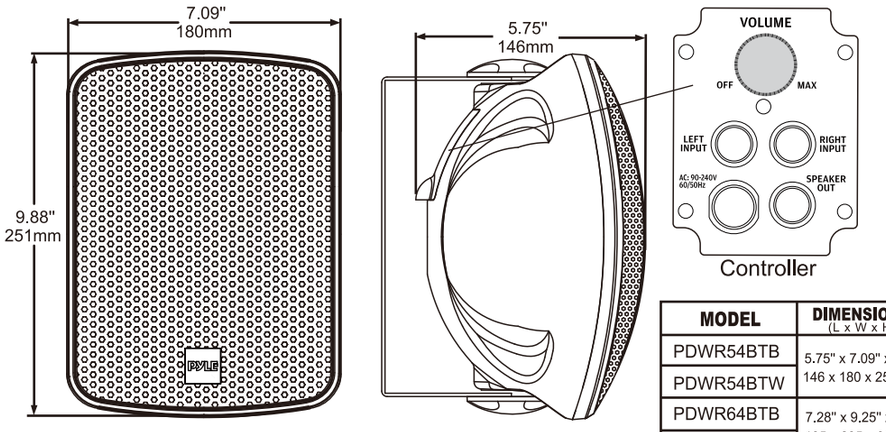

MODEL	DIMENSIONS (L x W x H)
PDWR54BTB	5.75" x 7.09" x 9.88" 146 x 180 x 251mm
PDWR54BTW	
PDWR64BTB	7.28" x 9.25" x 13.0" 185 x 235 x 330mm
PDWR64BTW	

Packaging contents

1. 2 Loudspeakers
2. 2 Brackets
3. 4 Bracket Bolts
4. 4 Screws
5. 1 Connetion Wire
6. 1 RCA Wire

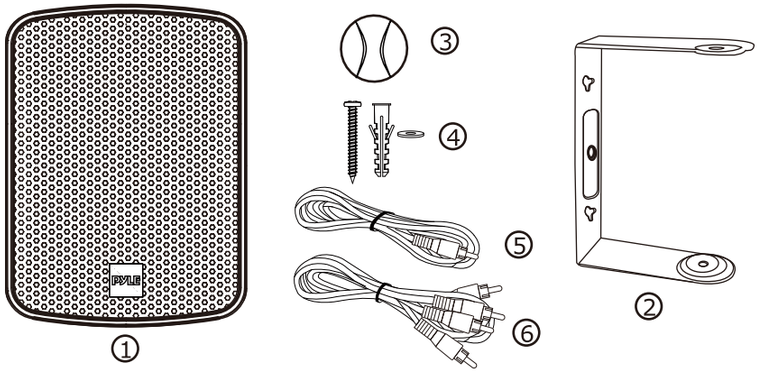

BT connection

Please be sure the BT is turned on at your device. When the device is in BT range, it will connect BT automatically and will be diconectted automatically when it is out of BT range.

FCC Warning

This device complies with part 15 of the FCC Rules. Operation is subject to the following two conditions: (1) This device may not cause harmful interference, and (2) this device must accept any interference received, including interference that may cause undesired operation.

Any Changes or modifications not expressly approved by the party responsible for compliance could void the user's authority to operate the equipment.

Note: This equipment has been tested and found to comply with the limits for a Class B digital device, pursuant to part 15 of the FCC Rules. These limits are designed to provide reasonable protection against harmful interference in a residential installation. This equipment generates uses and can radiate radio frequency energy and, if not installed and used in accordance with the instructions, may cause harmful interference to radio communications. However, there is no guarantee that interference will not occur in a particular installation. If this equipment does cause harmful interference to radio or television reception, which can be determined by turning the equipment off and on, the user is encouraged to try to correct the interference by one or more of the following measures:

-Reorient or relocate the receiving antenna.

-Increase the separation between the equipment and receiver.

-Connect the equipment into an outlet on a circuit different from that to which the receiver is connected.

-Consult the dealer or an experienced radio/TV technician for help.

This equipment complies with FCC radiation exposure limits set forth for an uncontrolled environment. This equipment should be installed and operated with minimum distance 20cm between the radiator & your body.