PYLE®

www.PyleUSA.com

PLMR90UW
PLMR91UB
PLMR91US
PLMR94W

USER MANUAL

Waterproof Bluetooth Marine Digital Media Receivers

The round-style headunit receiver radio features Bluetooth technology allowing music to wirelessly stream from your compatible Bluetooth-enabled device. Control the audio from a distance -- all from your handheld device. Marine grade waterproof construction makes this unit perfect for upgrading your marine audio system. The input and output connectors allow you to connect external devices and speaker systems for a more convenient and selective listening experience.

Warning:
It is recommended you seek the assistance of a professional upon installation.
Be sure to provide adequate clearance behind the receiver where mounting. Be sure as to avoid obstruction of any existing wires, fuel lines, electronic circuitry or vehicle safety features prior to installation. Make sure to safely and securely prepare the area of installation as to avoid any disruption of your vehicle's mechanical, electrical or safety systems.

Choose a mounting location with a flat surface to ensure a flush and water-tight fit.

To prevent any interference, distortion or accidental operation -- due to radio frequency waves or extreme temperature, choose a mounting and installation location farthest from the engine compartment.

Disconnect the battery to ensure there will be no shorted wires during the installation procedure.

Do not submerge the unit in water.

Installation of Marine audio components requires experience and expertise with a variety of mechanical and electrical knowledges and practices. This user manual provides basic and general installation and operation instructions for your new marine receiver, it may not show the exact installation methods which may be required for your particular installation. Always consult a professional prior to installation and mounting.

Care and Maintenance:
Clean the player with a slightly damp, soft cloth using a mild household cleaner. Do not use solvents such as benzene, thinner, or other commercially hazardous chemical cleaners. Be sure to regularly inspect the connections on the rear of the unit for corrosion and correct as needed.

Mounting:
Choose a mounting location on the dash / instrument panel that will allow room for proper connecting to the power source. Take into consideration how you will use the input connectors, output connectors, USB connector and the antenna jack if necessary. Prepare the area for installation by carefully removing any interior trim panels and obtrusive materials as necessary. Route wire harnesses away from sharp edges, and ensure that no harnesses wire/connector will be pinched or pierced during reassembly.
Once a suitable location has been determined, drill the hole and secure the stereo using the included screws and metal mounting U-shape bracket.

Cut a hole in the designated area with a diameter of 3.0'' and depth of at least 3.9'' (to accommodate for the bracket mounting hardware and cables/wiring.) Make sure the receiver fits snug into the drilled opening.

Insert the screw bolts into the back of the receiver. The "U" bracket then slides over the screw bolts and secures the receiver to the dash opening, using hex nuts to tighten the fit. The hex nuts can continue to be tightened against the bracket for secure and stable fitting against your dash / console panel.

Before cutting any panel, ALWAYS ensure that there is sufficient clearance behind the panel, and that no wire harnesses, fuel lines, moving linkages, or any other critical components are exposed to damage by your choice of location. NEVER risk damage to the hull while cutting your opening.

Installation / Mounting:

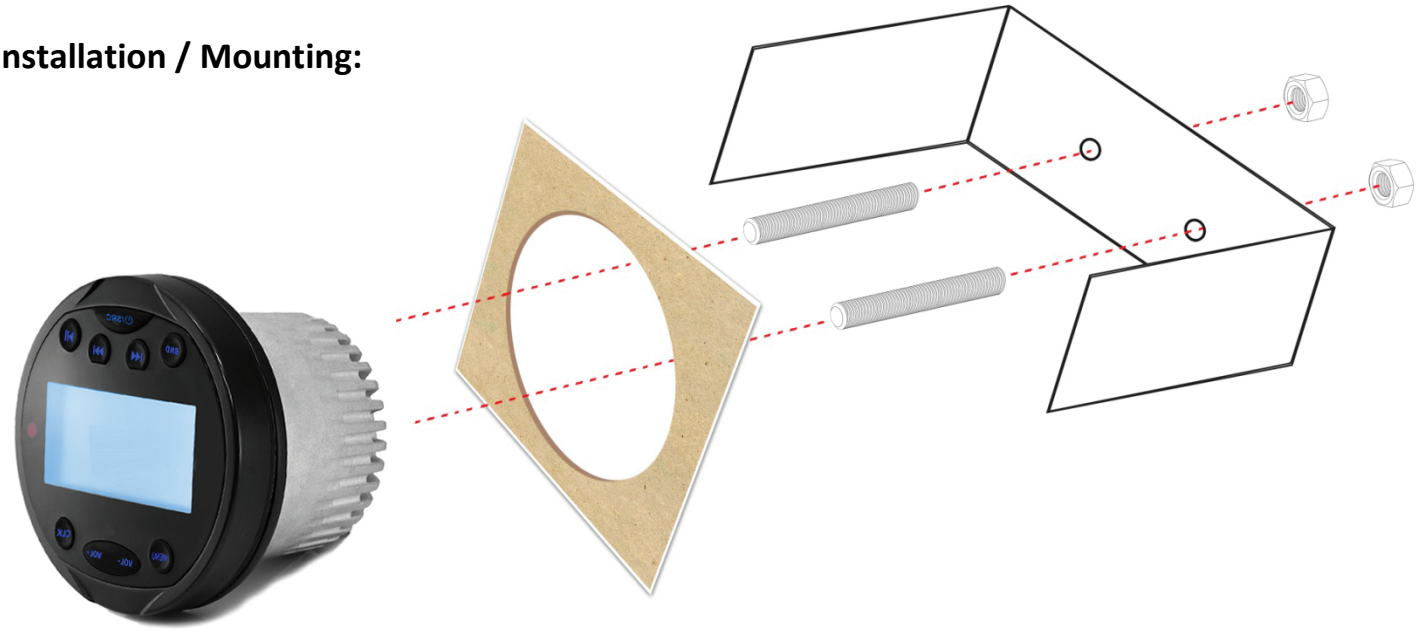

Be sure to install the U-shaped bracket so it fits flush to the interior of the mounting wall. The receiver face should sit flush on your dash / console panel.

The two threaded bolts screw into the rear of the receiver housing. The bolts then slide through the U-shaped bracket and are tightened from the other ends by nuts. Be sure as to avoid pinching any cables/wiring, and not too over-tighten the nuts.

Ensure a water tight seal is created between your receiver and the dash / console panel, as to not allow moisture into the opening compartment.

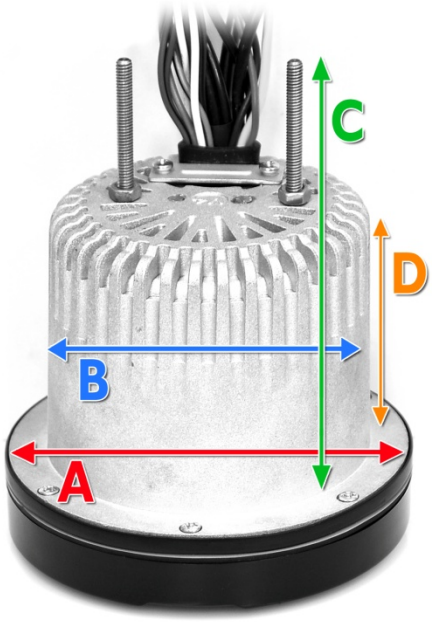

A. Overall Diameter: **4.0”**

B. Cut-Out Diameter: **3.0”**

C. Total Depth: **3.9”**

D. Cut-Out Depth: **2.5”**

*Please Note: The yellow RCA Video Connectors can only be found on model ***PLMR94W.***

Wiring:

Colored Wires		
A	White / Black Stripe	Front Left SPK -
B	White	Front Right SPK +
C	Gray / Black Stripe	Front Right SPK -
D	Gray	Front Right SPK +
E	Green / Black Stripe	Rear Left SPK -
F	Green	Rear Left SPK +
G	Purple / Black Stripe	Rear Right SPK -
H	Purple	Rear Right SPK +
I	Blue	Auto Antenna
J	Black	GND

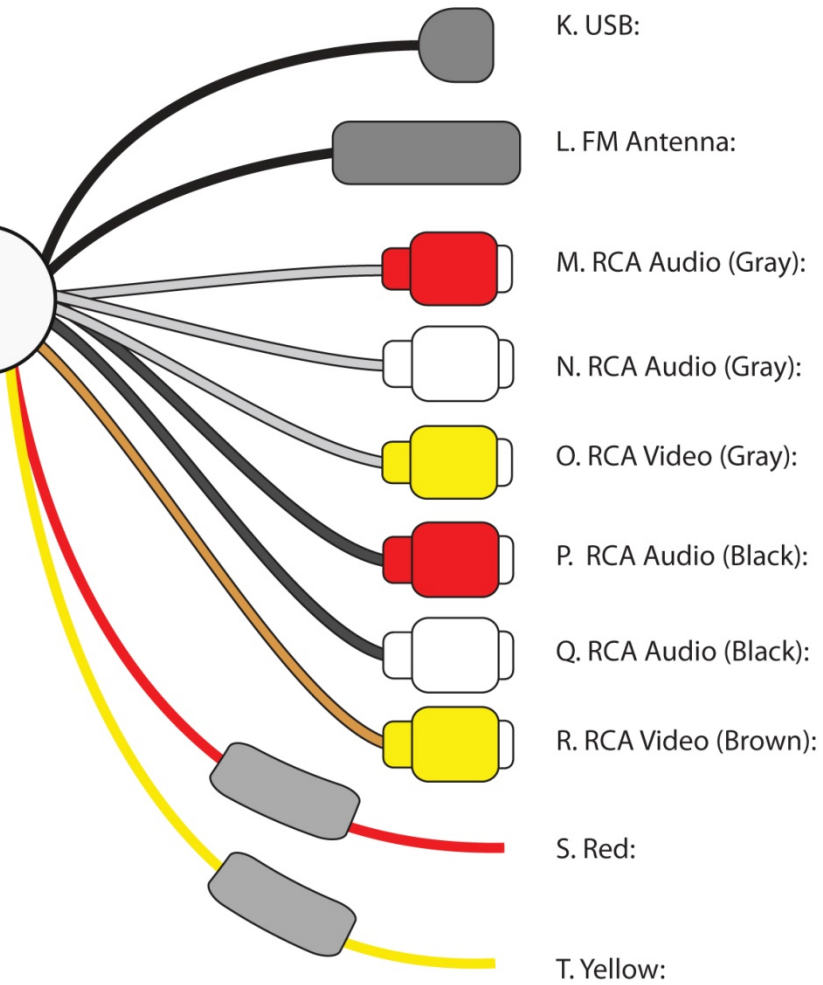

Wires / Connectors		
K	USB	USB Flash
L	Antenna	Radio Antenna
M	RCA (Gray)	R Ch. Output
N	RCA (Gray)	L Ch. Output
*O	RCA Video (Gray)	Video Output
P	RCA (Black)	R Ch. Input
Q	RCA (Black)	L Ch. Input
*R	RCA Video (Brown)	Video Input
S	Red	Acc
T	Yellow	B+ 12V

*Please Note: The yellow RCA Video Connectors ('O' and 'R') can only be found on model ***PLMR94W.***

Visit *www.Pyle¦{A.com* for more detailed product-specific information

Control:

Button Layout	
A	Band
B	Previous
C	Power/Source
D	Next
E	Play / Pause
F	Menu
G	Volume - / +
H	Clock

A	Band	Press the button to jump between radio bands (AM 1, AM 2, FM 1, FM 2, FM 3). You can save up to a total of 30 radio stations (12 AM, 18 FM). To set a station, tune to your desired station, then press and hold the Play / Pause button. The screen will then display 'SAVE CH 1' - you can press the Play / Pause button to assign a different save channel. Pressing the Play / Pause button again, will ask you to save to: 'SAVE CH 1', 'SAVE CH 2', 'SAVE CH 3', etc. Please note: the station will save the channel in the designated 'band' you are currently in.
B	Previous	Scan to the previous radio station or, when in USB or Bluetooth mode, jump to the previous track.
C	Power/Source	Long Press: Power ON / OFF - The unit is powered ON once the LCD backlight display is blue. Short Press: Change source.
D	Next	Scan to the next radio station or, when in USB or Bluetooth mode, jump to the next track.
E	Play / Pause	Play or pause your streaming audio (USB - Bluetooth)
F	Menu	Short Press: Preset or save station. Long Press: BAS-TRE-BAL-FAD-EQ-LOUD-CT(INDEP/SYNC)-BEEP-CLOCK(12/24)-P_VOL-DX-ST
G	Volume - / +	Minimum volume: 0, Maximum volume: 43
H	Clock	Press the button to display the time. Hold in the button until the digits begin to blink. Once the digits are blinking you can set the time, use the previous and next buttons to adjust the numbers, then press the clock button again, while blinking, to move between hours and minutes.

Bluetooth Pairing:

1. Power on your receiver radio

When your unit is ON, it is ready to be 'paired' with your compatible Bluetooth-enabled device

2. From your smartphone or tablet, search for Bluetooth networks can select 'PyleUSA'

The pairing process may take up to 1 minute and your device must be within range of the receiver to connect

3. Once successfully paired, the 'B' icon will appear on the receiver's LCD display.

You can then press the 'MOD' button on the receiver to change between audio modes

Audio modes: AUX, Radio, 'BT' - Bluetooth

Troubleshooting

Problem	Possible Cause	Possible Solution
No power	1. Incorrect wiring 2. Blown fuse 3. Low battery voltage	1. Double-check wiring connections 2. Replace fuse 3. Check the voltage of the vehicle battery with a multimeter. Voltage must be at least 11V
No Sound	1. Loose speaker connection 2. Bad speaker 3. Output blown 4. Volume too low on the connected external device	1. Double check connections 2. Replace bad speaker with known good speaker and connect 3. Send unit in for repair 4. Increase volume of media device *Be sure to check all connections and make sure the unit is properly ground
No Reception	1. Antenna not firmly connected	1. Insert antenna firmly
USB Memory Not Being 'Read'	1. File types must be compatible	1. Convert the file types to an appropriate and compatible format
No Bluetooth Connection	1. You are not paired to the receiver from your device 2. Out of range 3. The connection is already in use	1. Choose the correct Bluetooth network from your device 2. Bring your compatible Bluetooth device closer to the receiver 3. The receiver may be paired to another device. Be sure to disconnect the Bluetooth pairing connection from all other devices, and attempt Bluetooth pairing again.

Visit *www.Pyle¦{!.com* for more detailed product-specific information

PyleUSA.com

PLMR94W (White)
Waterproof Bluetooth Marine Digital Media Receiver

Marine Stereo Receiver Radio System
Bluetooth Wireless Music Streaming
Digital Media Audio File Playback
USB Flash Drive Reader
Marine Grade Waterproof Construction
AM/FM Radio with Station Preset Memory
RCA (L/R) Audio Input Connector Jacks
Ability to Connect Additional Audio Devices
RCA (L/R) Audio Output Connector Jacks
Ability to Connect to External Speaker Systems
RCA Video Input / Output Connector Jacks
Built-in Pre-Amplifier for Subwoofer / Amplifier Connection
LCD Digital Display, Button Illumination
ID3 Tag Song Information Readout
Digital Audio Media File Support
Front Panel Touch Button Controls
Audio Input Source Selectable
Audio, Video and Image Digital File Support
For Marine/Boat In-Console Dashboard Panels
Includes Remote Control, Mounting Bracket, Power/Wiring Harness

Bluetooth Streaming
Built-in Bluetooth for Wireless Audio Ability
Works with All of Your Favorite Devices
(iPhone, Android, Smartphone, iPad, Tablet, etc.)
Bluetooth Version: 2.1
Bluetooth Wireless Range: 10' Feet

Technical Specs:
Peak Power Output: 4 x 40 Watt
RMS Power Output: 4 x 20 Watt
Frequency Response: 20Hz-20kHz (+/-3dB)
Marine Grade Rating: IPX5
Impedance: 4 Ohm
S/N Ratio: 55dB
Stereo Separation: >30dB, @ 1kHz
AM/FM-MPX PPL Tuning
Radio Tuner Presets: 18FM, 12AM
AM Frequency Range: 530-1710MHz
FM Frequency Range: 87.5-107.9MHz
Maximum USB Flash Support: 32GB
Digital Media File Support: MP3, MP4, WMV, WAV, MOV & More
Zero Current Draw

Dimensions:
Receiver Diameter: 4.0''
Cut-Out Diameter: 3.5''
Mounting Depth: 2.5''

PLMR90UW (White)
PLMR91UB (Black)
PLMR91US (Silver)
Waterproof Bluetooth Marine Digital Media Receiver

Marine Stereo Receiver Radio System
Bluetooth Wireless Music Streaming
Digital Media Audio File Playback
USB Flash Drive Reader
Marine Grade Waterproof Construction
AM/FM Radio with Station Preset Memory
RCA (L/R) Audio Input Connector Jacks
Ability to Connect Additional Audio Devices
RCA (L/R) Audio Output Connector Jacks
Ability to Connect to External Speaker Systems
Built-in Pre-Amplifier for Subwoofer / Amplifier Connection
LCD Digital Display, Button Illumination
ID3 Tag Song Information Readout
Digital Audio Media File Support
Front Panel Touch Button Controls
Audio Input Source Selectable
For Marine/Boat In-Console Dashboard Panels
Includes Mounting Bracket, Power/Wiring Harness

Bluetooth Streaming
Built-in Bluetooth for Wireless Audio Ability
Works with All of Your Favorite Devices
(iPhone, Android, Smartphone, iPad, Tablet, etc.)
Bluetooth Version: 2.1
Bluetooth Wireless Range: 10' Feet

Technical Specs:
Peak Power Output: 4 x 40 Watt
RMS Power Output: 4 x 20 Watt
Frequency Response: 20Hz-20kHz (+/-3dB)
Marine Grade Rating: IPX5
Impedance: 4 Ohm
S/N Ratio: 55dB
Stereo Separation: >30dB, @ 1kHz
AM/FM-MPX PPL Tuning
Radio Tuner Presets: 18FM, 12AM
AM Frequency Range: 530-1710MHz
FM Frequency Range: 87.5-107.9MHz
Maximum USB Flash Support: 32GB
Digital Media File Support: MP3, WMA
Zero Current Draw

Dimensions:
Receiver Diameter: 4.0''
Cut-Out Diameter: 3.5''
Mounting Depth: 2.5''

FCC Statement:

This device complies with part 15 of the FCC Rules. Operation is subject to the following two conditions: (1) This device may not cause harmful interference, and (2) this device must accept any interference received, including interference that may cause undesired operation.

This equipment has been tested and found to comply with the limits for a Class B digital device, pursuant to part 15 of the FCC Rules. These limits are designed to provide reasonable protection against harmful interference in a residential installation. This equipment generates, uses and can radiate radio frequency energy and, if not installed and used in accordance with the instructions, may cause harmful interference to radio communications. However, there is no guarantee that interference will not occur in a particular installation. If this equipment does cause harmful interference to radio or television reception, which can be determined by turning the equipment off and on, the user is encouraged to try to correct the interference by one or more of the following measures:

—Reorient or relocate the receiving antenna.

—Increase the separation between the equipment and receiver.

—Connect the equipment into an outlet on a circuit different from that to which the receiver is connected.

—Consult the dealer or an experienced radio/TV technician for help.

Caution: Any changes or modifications not expressly approved by the party responsible for compliance could void the user's authority to operate the equipment.

This equipment complies with FCC radiation exposure limits set forth for an uncontrolled environment. This transmitter must not be co-located or operating in conjunction with any other antenna or transmitter.

This equipment should be installed and operated with minimum distance 20cm between the radiator&your body.