vyvo

BioSense

health smartband

QUICK
START
GUIDE

vyvo

BioSense

health smartband

1

Packing List

The box contains the following items

BioSense
smartband

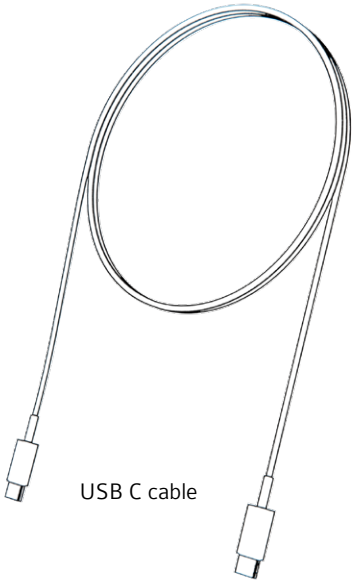

USB C cable

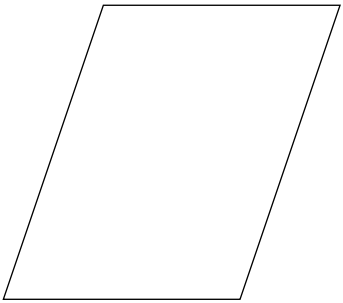

Card info

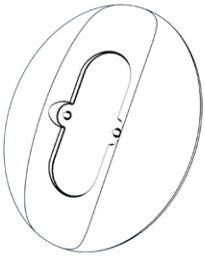

Charging Base

vyvo

BioSense

health smartband

2

How to operate

1. Insert the USB C cable into the charger base socket.

2. Put the **BioSense** onto the charging base and align the metal contacts on the back of the smartband with the gold pins on the charging base while placing. the device and the charger will line up with magnets in the right direction.

3. Place the charger on the deck with the BioSense sideways

1

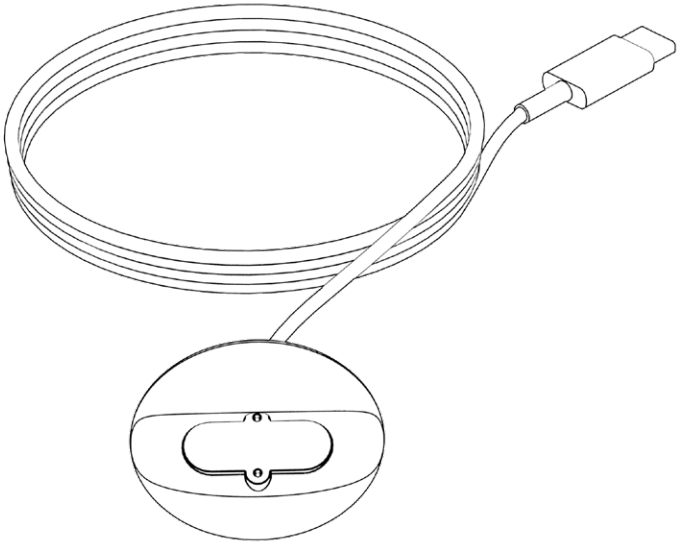

Input voltage: 5V DC.
Charging time: about 2 hours.

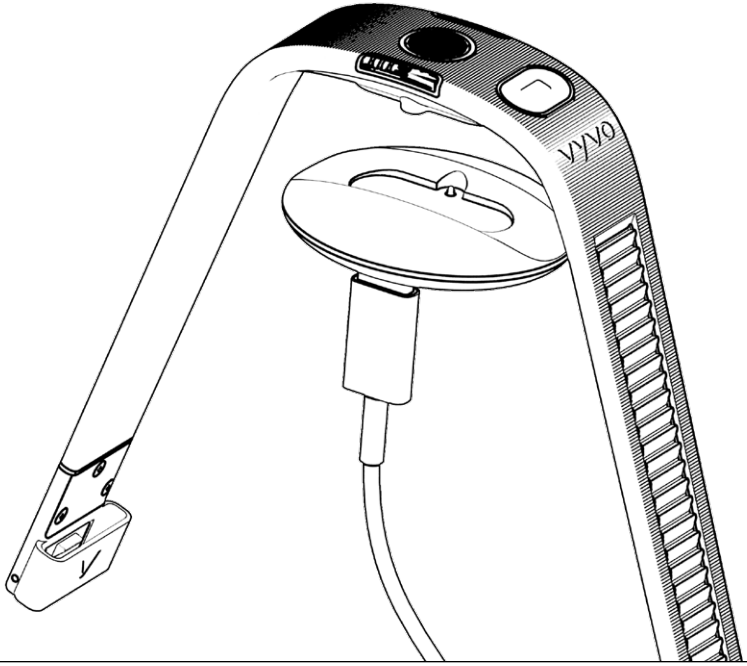

2

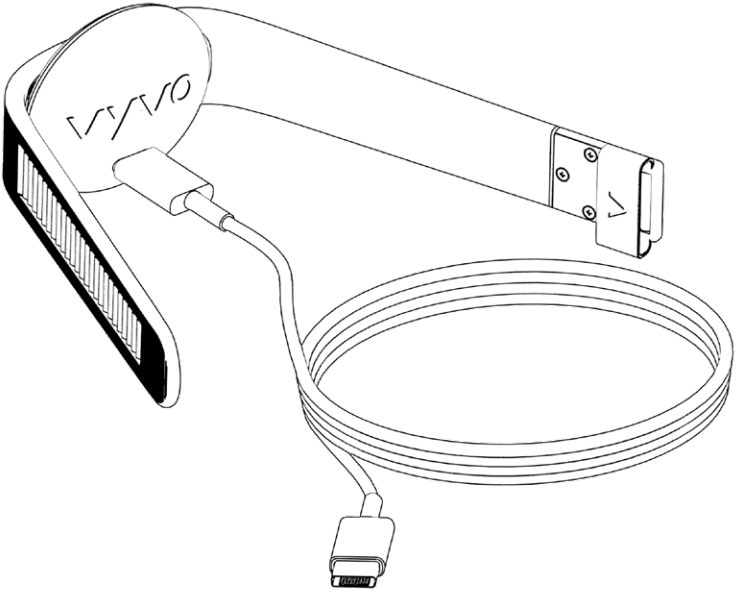

3

VYVO

BioSense

health smartband

2

How to operate

4. Power On
Press and hold on the button to power on

5. Power Off
It will be functional only through the App

6. APP Download
Download the VYVO Smart App from the App Store, Google Play Store or VYVO App STO.
Note: To use "VYVO Smart App" on an iPad, you need to select "iPhone only" when downloading it from the App Store

7. Compatibility & Support
Support Android 5.0 or above, iOS 10.0 or above

8. Connection
After finishing the download, open the App and register an account, then complete the connection process according to the operating instructions on the App

NOTE
In order to successfully connect a phone to the smartband, you need to turn on the Bluetooth on the phone and connect to your device through the App

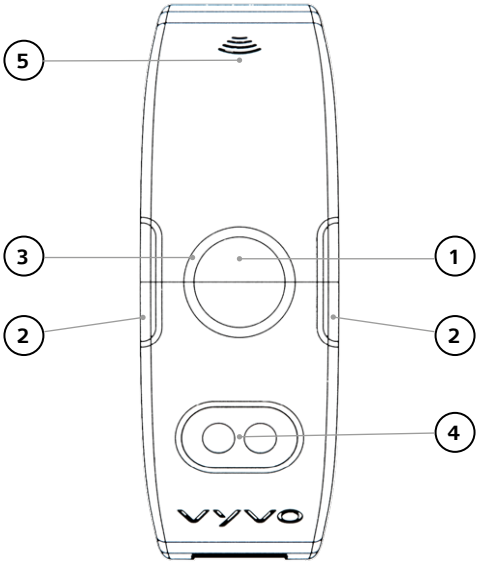

1. Power ON button
2. ECG & BIA electrodes
3. LED light
4. BP, SpO2, APG sensor
5. VYVO Pay chip inside

vyvo

BioSense

health smartband

3

Introduction for important features

Heart rate monitoring

In order to monitor heart rate more accurately, please wear the smartband approximately one finger away from the wrist bone.

NOTE

BioSense is only lor swimming. If you wear BioSense lor diving, it may cause damage to the device. Such damage is not within the scope of the warranty.

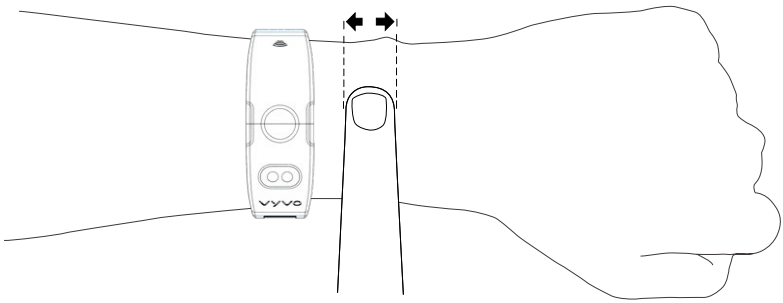

VYVO

BioSense

health smartband

4

More information

Waterproofing instructions
The waterproof level of BioSense is IP68 (50m).

NOTE

1. Swim, shower and washing hands only under cold water.

2. BioSense does not have a waterproofing effect on seawater, acid and alkaline solution, chemical reagents and other corrosive liquids. If inadvertently encounter or contact with corrosive liquid, please clean with clear water and dry the device. The damage caused due to improper use or abuse of the devi ce is not within the scope of the warranty.

vyvo

BioSense

health smartband

5

Tech Sheet

HARDWARE and SOFTWARE specification

Process description	1. Wristband material: liquid silica gel + PA two-color coating, surface drying pattern + UV modification, built-in magnet adsorption 2. Heart electrode: stainless steel 316L + pvd gold 3. Bottom shell: PA embedded 2 pieces of 316L stainless steel + PVD + 2PCS POGO pin

Basic specification	size	---
	weight	---
	color	black/white
Hardware specification	built-in storage	RAM: 256KB, ROM: 1Mbit, external 8MB
	APP	iOS 10.0 or above, Android 5.0 or above
	display	---
	resolution	---
	button	touch button
Connection	bluetoth	BLE 5.0
	WIFI	---
	NFC	support

Battery	**Category**	Lithium polymer
	Standard Voltage	3.8 V
	capacity	45 mAh
	size	19.5*11*2.5 mm.
App	VYVO Smart	Health Features: Heart Rate, Respiratory Rate, Energy, Stress, ECG, BIA, APG, Blood Pressure, Blood Oxygen, Arrhythmia Detection, Temperature, Sleep
		Activity data: steps, calories, standing
		Guardian, heart rate, respiratory rate, blood pressure, blood oxygen, temperature, atrial fibrillation
Other data	**waterproof level**	IP68
	charging time	2 hours
	strap size	140-200 mm. (prototype length plus or minus 5 mm.)
	strap material	liquid silicone

FUNCTIONS

Healthy	HR	Support to turn on/off 24-hour automatic measurement, the automatic measurement interval is measured once every 10 minutes (the whole point: 00, 10...)
		Support manual measurement, app initiated
	BR	Support turning on/off 24-hour automatic measurement (determined by whether the heart rate is turned on/off), and the automatic measurement interval is measured once every 10 minutes (the whole point: 00, 10...)
		Support manual measurement, app initiated
	ECG	Initiate the measurement from the APP, and touch the left and right electrode pads with your fingers
		Data results are uploaded to the app for AI analysis
	BIA	Initiate the measurement from the APP, and touch the left and right electrode pads with your fingers
		The data is uploaded by the app to the server for calculation and returned
	Energy	Support 24-hour automatic measurement, the automatic measurement interval is 1 hour, and the measurement is on the whole point
		Support manual measurement, app initiated
	Stress	Support 24-hour automatic measurement, the automatic measurement interval is 1 hour, and the measurement is on the whole point
		Support manual measurement, app initiated
	BP	Connect APP for blood pressure calibration
		Support 24-hour automatic measurement, the automatic measurement interval is 1 hour, and the measurement is on the whole point. Support manual measurement, app initiated
	APG	The data is uploaded by the app to the server for calculation and returned
		Support manual measurement: 1. APP launch
	SpO2	Support 24-hour automatic measurement, the automatic measurement interval is 1 hour, and the measurement is on the whole point. Support manual measurement, app initiated
	AFib	Control the switch from the app. After turning it on, the detection is turned on immediately, and the green light on the back of the bracelet is always on.
	Sleep	It will collect, during the whole night, all values coming from the PPG sensor to estimate the sleep quality and connected to the gyro sensor will complete the estimation
	Body Temp.	Support 24-hour automatic measurement
		Get from temperature sensor

Guardian	**HR**		APP settings, show alert by led light, send email
	BR		
	BP		
	SpO2		
	Afib		
	Body temperature		
Activity data	**Steps**		APP display
	Calories		
	Stand		
Electrode	**Distribute the left and right sides of the bracelet host, used for ECG/BIA measurement**	ECG	The index finger and thumb are attached to the electrode pads on both sides respectively (write the measurement precautions on the APP and attach the operation gesture diagram)
		BIA	Pinch the electrodes on both sides with the index finger and thumb respectively, and the left and right hands cannot touch each other (the measurement precautions are written on the APP and the operation gesture diagram is attached)
Touch button	**Long Press**	10 seconds	ON › Soft fast transition between all spectre colors (1/4 second per color) until at the switch on
		3 seconds	Broadcast › The bracelet enters the broadcasting state (red and blue lights flash alternately)
	Click	Click 3 times in a row	Start SpO2/BP measurement (simultaneous measurement) Within 10 seconds of starting, blue light is flicking for 1 second, if the finger does not touch the fingertip LED light, it will automatically cancel

LED LIGHT STATUS

Fingertip LED Light	When manually starting SpO2/BP/APG/ECG measurement, the red light will light up after touching your finger				
LED lights	Orange	R:255 - G:160 - B:0	Flicker	Low battery ≤20%, flash once every 5 minutes	
	Green	R:90 G:190 B:50	Flicker	Bracelet charging, flicker once every 1 second	
			Always bright	Fully charged bracelet	
				Remove the charger light off	
	Light blue	R:0 G:160 B:220	Flicker	When requesting a measurement (via smartphone), flicker once every 1 second	
			Flicker	During blood oxygen/blood pressure/APG measurement: 1 - When the measurement is initiated, it flashes once every 1 second; 2 - When the fingertip covers the detection window, stop flashing (no light) to avoid affecting the data	
			Always bright	When the health measurement is completed, it is always on for 2 seconds	
	Red	R:230 G:0 B:0	Flicker	When the health measurement fails: Red Flicker (2 times for second)	
			Flicker	Guardian Alert: Flicker 10 seconds (2 times for second), then fix for 2 seconds	
	Multicolor	RGB	Flicker	Power On: Soft fast transition between all spectre colors (1/4 second per color) until at the switch on	
				Power Off: Soft slowly transition between all spectre colors (1 second per color) until shutdown	
	White	R:255 G:255 B:255	Always bright	To verify if the device is on. Click once the button and a white light be on for 2 seconds.	

Device Manteinance

Device care

1. Do not use any sharp objects to clean the device.

2. Avoid using chemical cleaners, solvent solutions or insect repellents that might damage plastic components of the device.

3. Thoroughly rinse the device with clean water after exposure to chiarine, salt water, sunscreen, alcohol, cosmetics or any other harsh chemicals. Prolonged exposure to these substances may damage the device.

4. Avoid pressing the keys while under water.

5. Avoid extreme shock and harsh treatment of the device, as it may reduce device product life.

6. Do not expose the device to extreme temperatures that are either too cold or too hot, for an extended period of time, which may cause permanent damage.

7. After each training session, please rinse the smartband with clean water.

Cleaning the device

Even the laintest prolonged exposure to sweat or moisture may cause corrosion of the charging terminal when charging the device, which will also hinder the transmission of data and affect the charging.

1. Gently wipe the device by using a cotton cloth with a mild neutral detergent;

2. Please allow the device to dry completely after cleaning.

Important safety and product information

- If you have a pacemaker or other internal electronic device, consult with your physician before using a heart rate monitor.
- The BioSense optical wrist heart rate monitor will occasionally emit green light and flashes. Consult with your physician if you have epilepsy or are sensitive to flashes of light.
- Always consult your physician before beginning or modifying any routine or exercise program.
- The device, accessories, heart rate monitor and related data are intended to be used only for recreational purposes, not medical purposes, and not intended to diagnose, monitor, treat, cure or prevent disease.
- The heart rate readings are for reference only, and no liability is accepted for the consequences of anywrong interpretation.
- Although the optical wrist heart rate monitor technology typically provides an accurate data for user's heart rate, there are inherent limitations with the technology that may cause some of the heart rate readings to be inaccurate under certain circumstances, including the user's physical characteristics, installation of the device and type & intensity of activity.
- The activity trackers rely on sensors to track your movement and other metrics. The data and information provided by the device are intended to assess your activity and metrics closely, but may not be completely accurate, including the data for steps, sleep, distance, heart rate, and calories.
- Do not immerse or expose batteries to water or other liquids.
- Do not expose the device to a heat source or in a high-temperature location, for example, in an unattended vehicle in the sun. To avoid the possibility of damage, remove the device from the vehicle or store it out of direct sunlight, such as the glove box.
- Do not operate the device outside of the temperature ranges specified in the printed manual, which are included in the product's packaging.
- When storing the device for an extended time period, please store within the temperature ranges specified in the printed manual which included within the product's packaging.
- Do not use a power and/or USB cable that is not Approved or supplied by the manufacturer. Please use within the temperature ranges specified in the printed manual which included in the produci packaging.

VYVO

BioSense

health smartband

Legal disclaimler

Some measurements require the installation of VYVO Smart App available for Android OS 5.0 or later and for Appie OS version 10.0 or later.

1. VYVO BioSense has a water resistance rating of 50 meters according to ISO standard 22810:2010. The devi ce can be used for shallow-water activities like swimming in a pool or ocean. However, VYVO BioSense should not be used for scuba diving, waterskiing, or other activities involving high-velocity water or submersion below shallow depth.

2. Unless otherwise specified, VYVO BioSense and relateci services are not medical devices and are not intended to diagnose, treat, cure, or prevent any disease. With regard to accuracy, VYVO has developed products and services to track certain wellness information as accurately as reasonably possible. The accuracy of VYVO's products and services is not intended to be equivalent to medicai devices or scientific measurement devices.

3. Consult your doctor before use if you have any pre-existing conditions that might be affected by your use of any VYVO product or service.

4. Certain functions may be limited in some countries.

vyvo

Thank you!

FCC Requirement

Any changes or modifications not expressly approved by the party responsible for compliance could void the user's authority to operate the equipment.

This device complies with Part 15 of the FCC Rules. Operation is subject to the following two conditions:

(1) this device may not cause harmful interference, and

(2) this device must accept any interference received, including interference that may cause undesired operation.

Note: This equipment has been tested and found to comply with the limits for a Class B digital device, pursuant to Part 15 of the FCC Rules. These limits are designed to provide reasonable protection against harmful interference in a residential installation. This equipment generates, uses, and can radiate radio frequency energy, and if not installed and used in accordance with the instructions, may cause harmful interference to radio communications. However, there is no guarantee that interference will not occur in a particular installation. If this equipment does cause harmful interference to radio or television reception, which can be determined by turning the equipment off and on, the user is encouraged to try to correct the interference by one or more of the following measures:

– Reorient or relocate the receiving antenna.

– Increase the separation between the equipment and receiver.

– Connect the equipment into an outlet on a circuit different from that to which the receiver is connected.

– Consult the dealer or an experienced radio/TV technician for help.