Mintion

• Make it Simple •

BEAGLE CAMERA

Quick Guide Manual

PACKING LIST

Beagle camera

Power
Plug x1

Type C Cable
1.5M x1
(For power)

USB-Micro-B
Cable 1M x1
(Connect to printer)

Micro SD
Card x1
(Insert in camera)

Reset
Needle x1

Quick Guide
Manual x1

SPECIFICATION

Part Number	Beagle
Night Version	Yes
Frame Rate	Up to 25fps
Upload Printable File	Yes, Only gcode files
Compatibility of 3D Printers	Marlin firmware
Videos/Printable Files Storage	Micro SD Card
Connect to Printer	USB Cable
Video Compress	H.264/H.265
Camera Resolution	Up to 1080P
Auto Time-lapse Video	Yes
Temperature Monitor	Yes, for Hot End & Hot Bed
WiFi Connectivity	Supports 2.4 GHz 802.11g/n
Power Source	Plug-in
Weight	150g

CAMERA INTRODUCTION

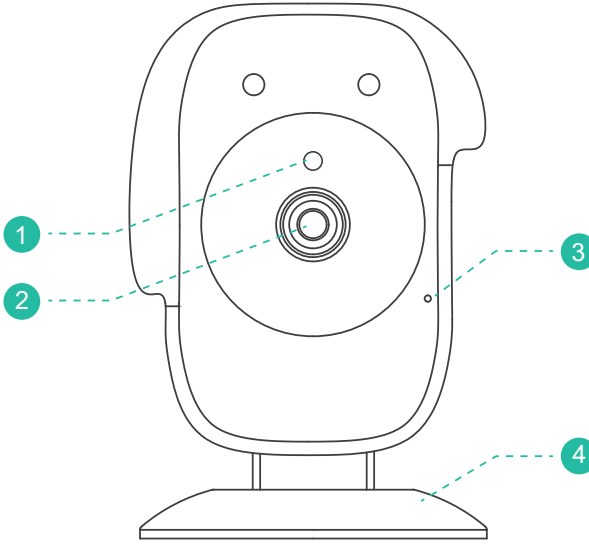

1 IR-Cut Sensor

2 Lens

3 Microphone

4 Camera Base

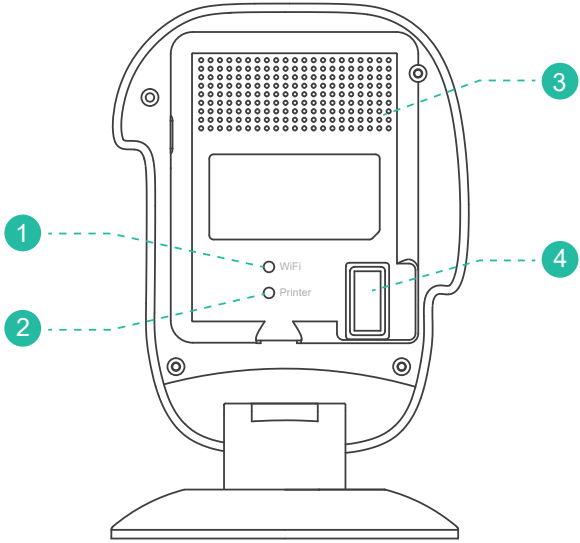

1 WiFi Indicator

Solid Green:
WiFi connected
Flashing Green:
WiFi disconnected

2 Printer Indicator

Solid Red:
Printer connected
Flashing Red:
Printed disconnected

3 Speaker

4 USB Socket

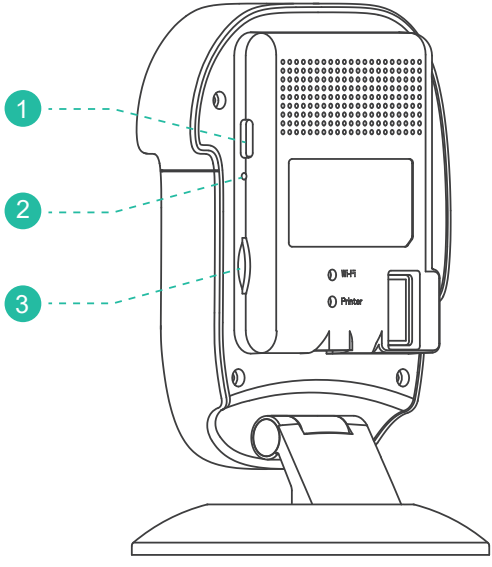

1 Type-C Socket (Power)

2 Plug and hold for 5 seconds, and you will hear the voice of "Successfully resetting the camera", then the camera will be reset and restart.

3 Micro SD Slot

CONNECTION

Connecting Cables

Plug the power cable into the camera and the power adaptor, then into a power outlet, plug the USB-Micro-B Cable into the camera and the 3d printer, as shown in the figure below.

(The camera will take 1-2 minutes when power-up, don't cutoff the power during this period.)

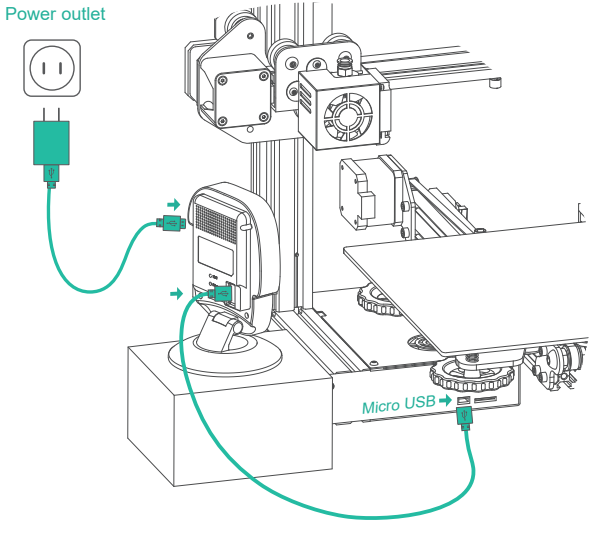

Connect to Printer

Plug the USB-Micro USB cable into the camera and the printer, as shown in the figure above.

Put on Camera

You could put the camera onto the box on the printer's front side, as shown below.

*You need to purchase a USB 2.0 Hi-Speed cable if your printer is with Hi-Speed 2.0 slot.

APP DOWNLOAD & REGISTRATION

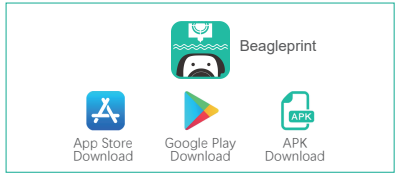

Please scan the QR Code to reach the App download page, then download from App Store, Google Play or download the APK directly. After download,Click to run the app and make the registration.

USE THE APP

Use your phone to connect to the camera hotspot

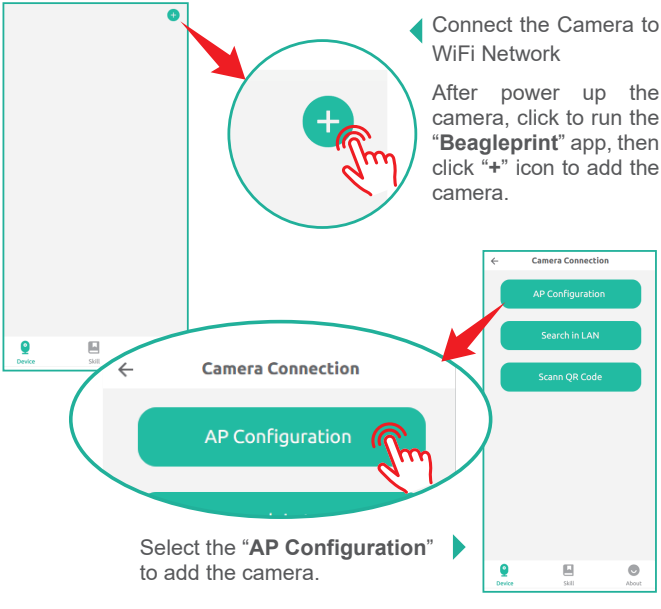

Connect the Camera to WiFi Network

After power up the camera, click to run the "**Beagleprint**" app, then click "**+**" icon to add the camera.

Select the "**AP Configuration**" to add the camera.

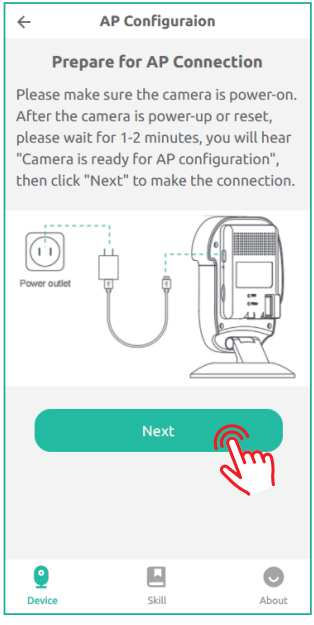

Make sure the power is not being cut off during the configuration.

Select your WiFi and then input the password to save the WiFi information in the app.

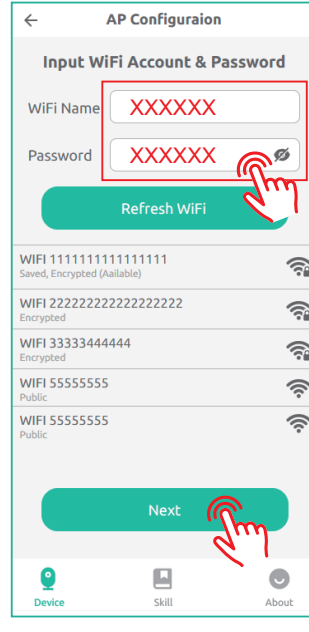

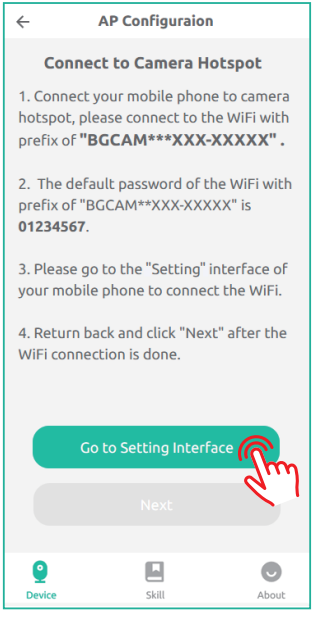

Go to the "**Setting**" interface of your mobile phone to connect the camera hotspot.

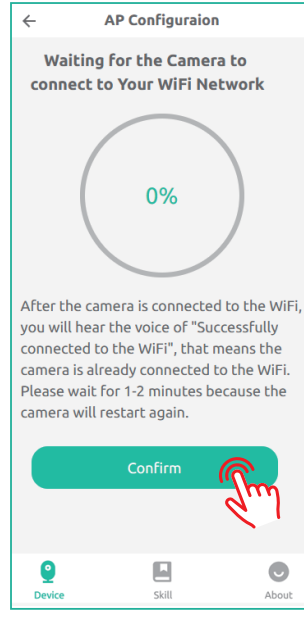

The camera will automatically connect to the WiFi network. Please wait for 1-2 minutes.

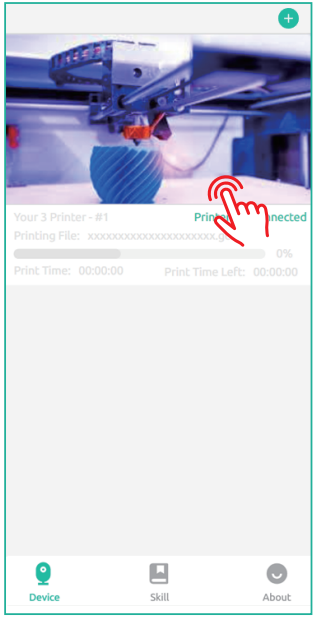

Click the camera image to log in and then connect the camera to your printer.

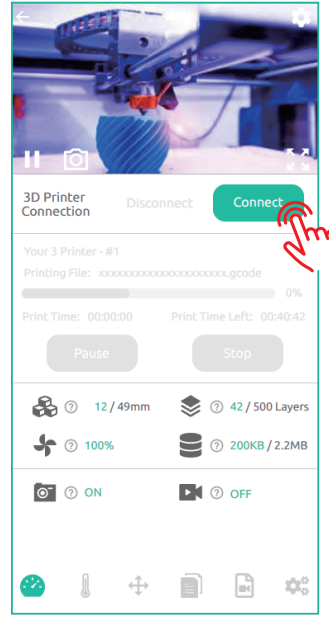

Click the “**Connect**” button to connect the camera to the printer, then you can control the printer through the camera.

ATTENTION

Please **DO NOT** cut off the power of the Beagle camera when it's working; **DO NOT** disconnect the camera from the printer when it is connected to the printer and transmit printable files through the camera for 3d printing. Otherwise, it will cause printing failure and damage the camera's firmware. In this case, the camera cannot work typically; this problem is the user problem, not a quality problem. Hence, please ensure that you cannot disconnect the camera from the power supply and the USB cable connected to the printer when the camera is working, and the 3d printer is printing.

The Beagle camera only supports one printer connection for control, allowing four users to simultaneously log in and access the camera (including mobile phone and computer users). Therefore, please make sure it's securely accessing the device to prevent bad guys from accessing the camera or printer and the environment to cause damage.

At the same time, we recommend that you do not let the 3d printer perform the 3d printing work completely unattended. Please come to the printer and watch the real printing progress of the printer regularly to prevent further deterioration of the situation when an abnormal condition occurs.

This camera shortens the distance between the user and the printer. The user is obliged to ensure the reasonableness and legality of the use of the product and avoid infringement of third-party rights, including but not limited to publicity rights, intellectual property rights, data rights, or privacy rights. At the same time, since the customers' use and storage of this camera are beyond our control, we are not responsible for possible personal injury or property loss.

This manual is for reference only. In any case, we have the right to modify and improve it without notifying users. If you want to know the latest instruction manual, you can go to the official website for more information.

FCC WARNING STATEMENT

Changes or modifications not expressly approved by the party responsible for compliance could void the user's authority to operate the equipment. This equipment has been tested and found to comply with the limits for a Class B digital device, pursuant to Part 15 of the FCC Rules. These limits are designed to provide reasonable protection against harmful interference in a residential installation. This equipment generates uses and can radiate radio frequency energy and, if not installed and used in accordance with the instructions, may cause harmful interference to radio communications. However, there is no guarantee that interference will not occur in a particular installation. If this equipment does cause harmful interference to radio or television reception, which can be determined by turning the equipment off and on, the user is encouraged to try to correct the interference by one or more of the following measures:ealer or an experienced radio/TV technician for help.

- Reorient or relocate the receiving antenna.
- Increase the separation between the equipment and receiver.
- Connect the equipment into an outlet on a circuit different from that to which the receiver is connected.
- Consult the dealer or an experienced radio/TV technician for help.

FCC RADIATION EXPOSURE STATEMENT

The antennas used for this transmitter must be installed to provide a separation distance of at least 20 cm from all persons and must not be co‑located for operating in conjunction with any other antenna or transmitter.

GUIDELINES OF BEAGLE CAMERA

Unboxing and Setup

Setup for Time-lapse Video

IP Address on PC

Firmwave Ungrade

3D Printers of compatibility

FAQ

Mintion

SHENZHEN MINTION TECHNOLOGY CO., LTD

Webside: www.mintion.net
Distribution: sales@mintion.net
Support: support@mintion.net
FB Group: Mintion Official Group (Beagleprint)