LaserPecker

LaserPecker 4 User Manual

APP/PC Software Download

1. Scan the QR code to Download the Android or iOS APP

NOTE: After installing the APP, please read all warnings and instructions carefully to ensure safety and the correct operation of the product

Scan QR code to download APP

Google Play

Apple App

2. Download the Windows/Mac software from the Official LaserPecker website.

After-Sales Services

- Technical support for this product is available globally. Please contact us if you encounter any problems with your LP4 and we will get back to you as soon as possible.
- Email：support@laserpecker.com
- Tel: +86 0755-28913864

Online User Community

- LaserPecker's huge online global community connects our diverse group of dedicated users and offers support, inspiration, and a showcase for sharing creativity.
- Facebook：LaserPecker 4

LaserPecker 4
VIP Group

Contents

Contents & List of Included Parts 01
Component Overview & Instructions 03
Electric Stand Assembly 05
Attaching the Laser Safety Shield 06
Connecting Components 07
Control Interface Options 08
Focal Ranging Methods 09
Touch Screen Function 10
Oblique Positioning 12
Attaching Alignment Fixtures 13
Machine Maintenance 14
Product Specifications 15
User Safety Guide 16
Precautions & Disclaimer 17
Warning 18
Warranty Terms 19
FCC Requirement 20
Copyright 21

List of Included Parts

Laser Unit *1

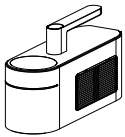

Electric Stand *1

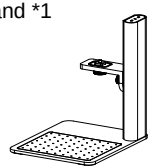

Field Lens *1 & Cover *1

Safety Cover *1

Safety Goggles *1

AC Cord *1
& Power Adapter *1

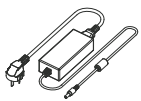

Wrench M2.5 *1 &
Screw M4X10 *4

1.5m Cable *1
& 0.6m Cable *1

Alignment Fixtures
& Screw *4

Ruler *1

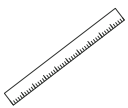

List of Included Parts

Double-step Jaw * 3

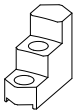

Single-step Jaw * 3

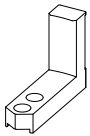

Stud Component * 3

Slide Axis *1

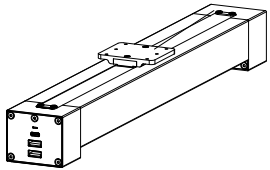

Cutting Pads *2

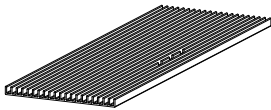

Rotary Headstock Head

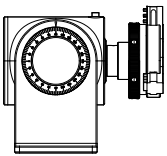

Rotary Headstock Baseplate

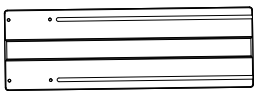

M3X6 Screw *6

1m USB-C Cable *1

Riser Add-on*1

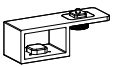

Support Module

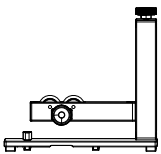

Elevation Pad * 1

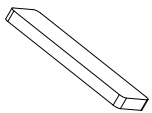

Riser Add-on *1

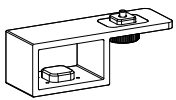

Wrench * 1

M3x6 Screw *6

M3x10 Screw *4

Hex Key

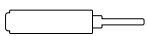

Component Overview & Instructions

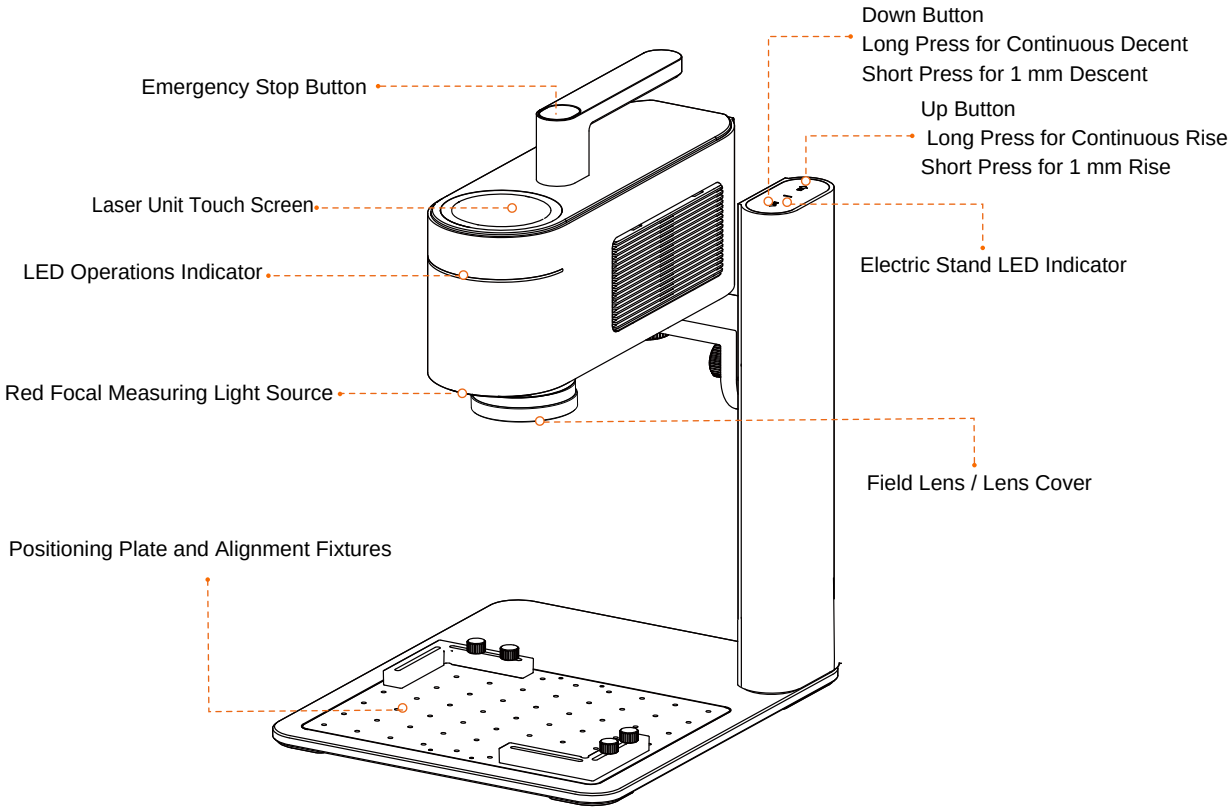

Component Overview & Instructions

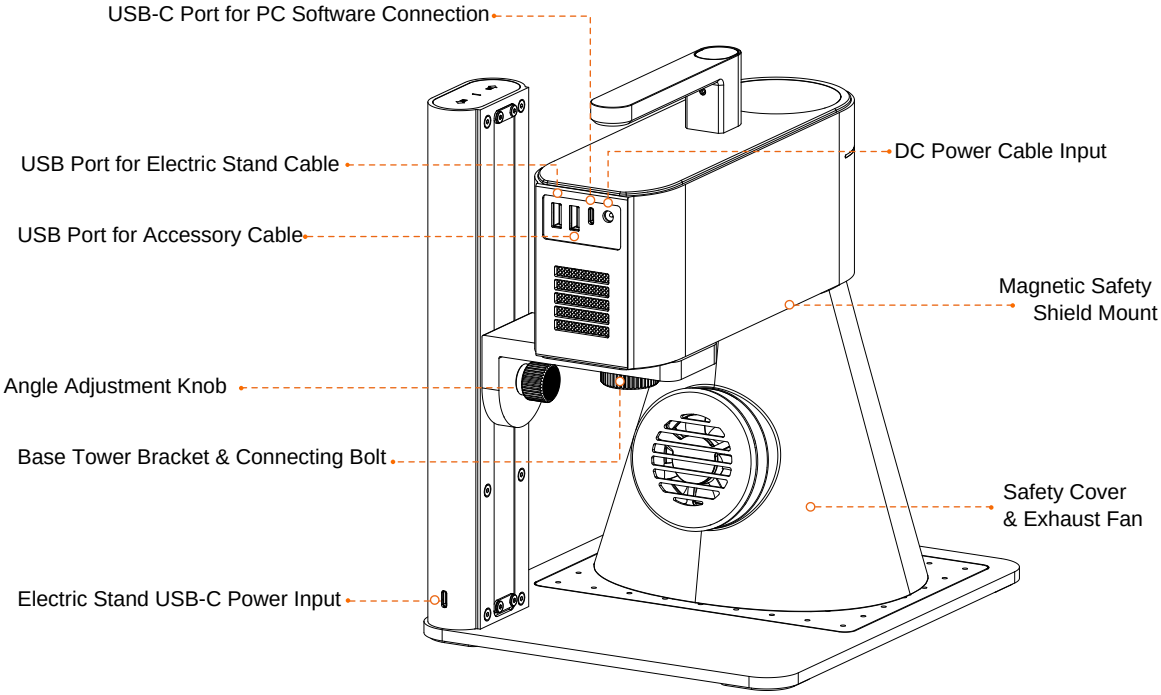

Electric Stand Assembly

1. Attach the tower to the base unit using the wrench and 4 screws.

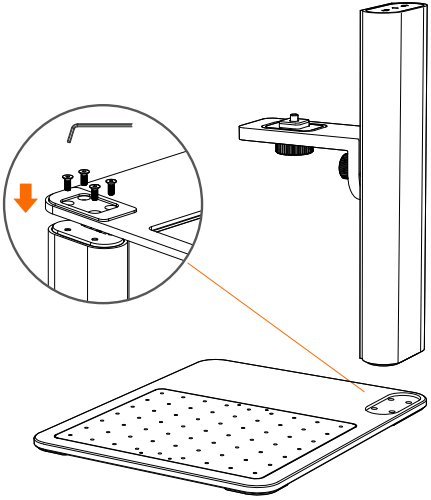

2. Attach the Laser Unit to the Electric Stand by aligning the underside threads with the bracket and securely tightening the knob.

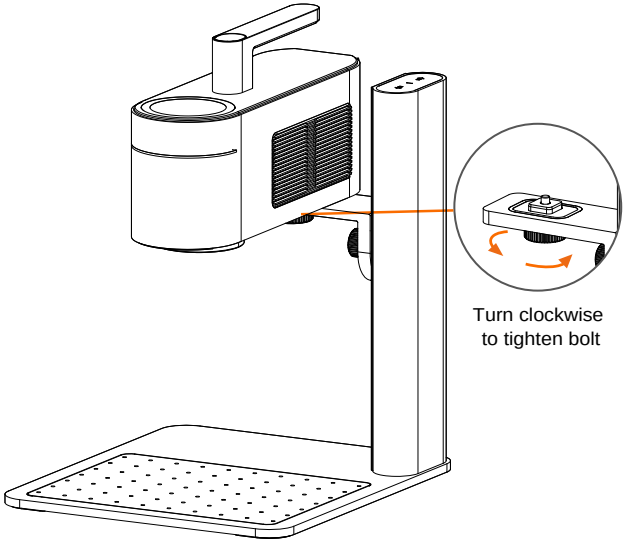

Attaching the Laser Safety Cover

1. Place the Laser Cover under the Field Lens and gently guide it upwards until it attaches magnetically to the Laser Unit.

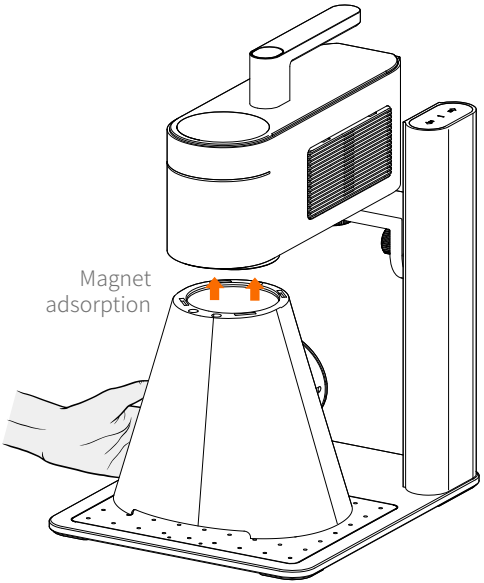

2. Safety Cover in position.

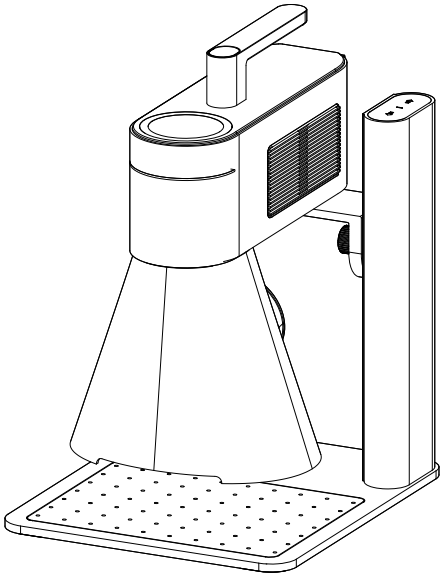

Connecting Components

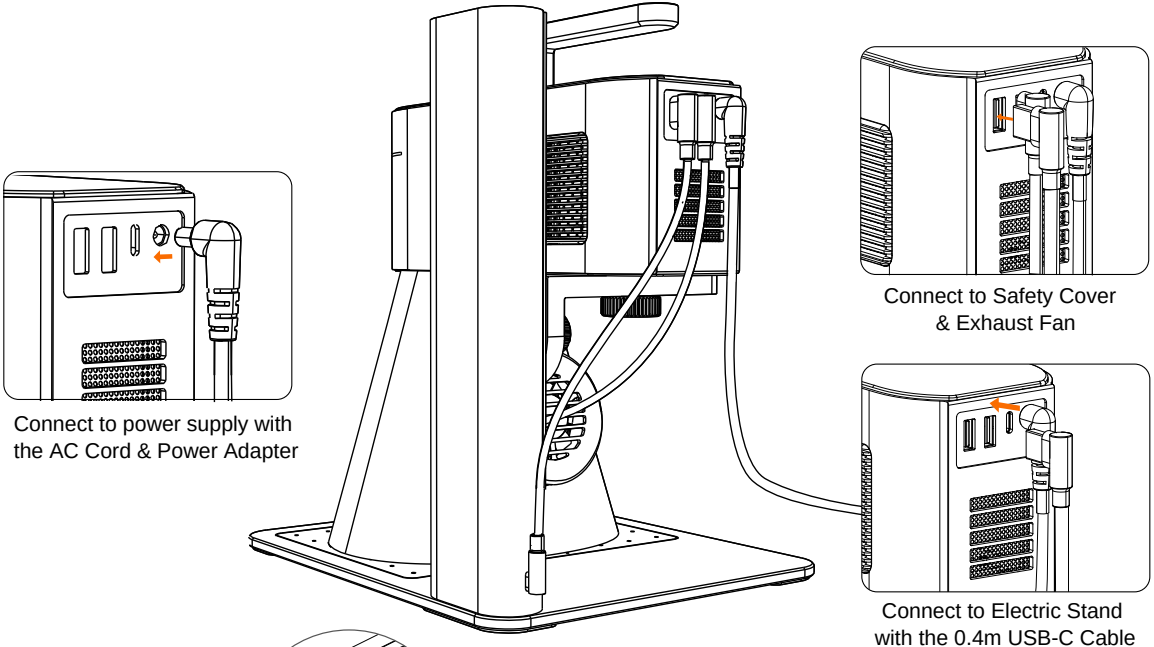

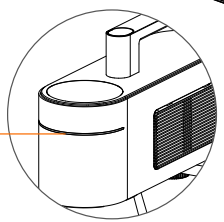

- Blinking Blue: Waiting for Bluetooth Connection
- Solid Blue: Bluetooth is Connected
- Streaming Green: Data is Transmitting
- Multi Color: Job in Progress

Control Interface Options

• Bluetooth Connection

Download the LaserPecker APP and follow the onscreen instructions for registration and the optional guided tutorial. If you do not receive a registration confirmation email, check your junk/spam folder. Next, with your device's Bluetooth enabled, search for and connect the APP to your LP4.

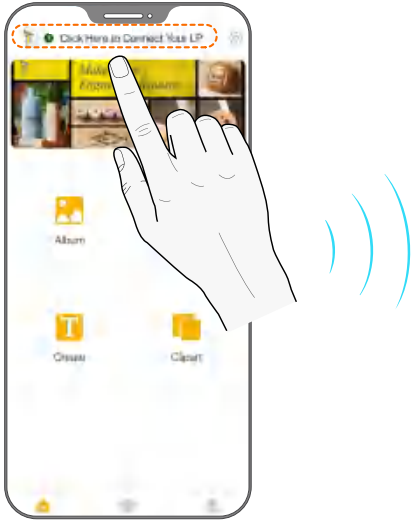

• USB & LP Bluetooth Dongle Connection

Download and install the WINDOWS or Mac LaserPecker Software onto your computer. Use a USB-C cable or an LP Bluetooth Dongle to connect it to your LP4. Click the red "Device not connected" button and choose the right port to get connected.

Focal Ranging Methods

• Measurement Focusing

To set the focal range by distance, raise or lower the Laser Unit with the Electric Stand controls until the underside measures 150 mm from the top of the material to be worked on.

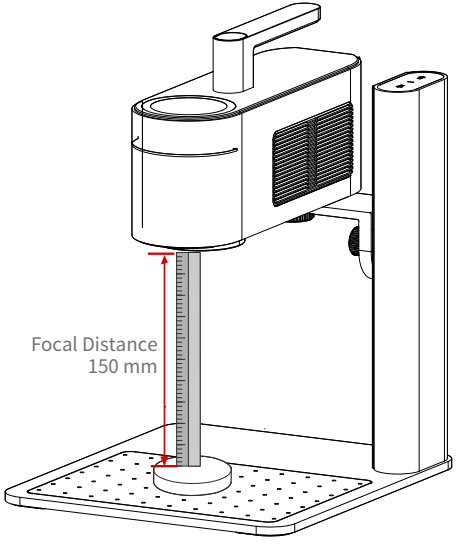

• Red Dot Focusing

While in Preview Mode on the Mobile App or PC Software, set the focal range by adjusting the height of the Laser Unit until the 2 red dots align into 1 or touch each other on the surface of the material to be worked on.

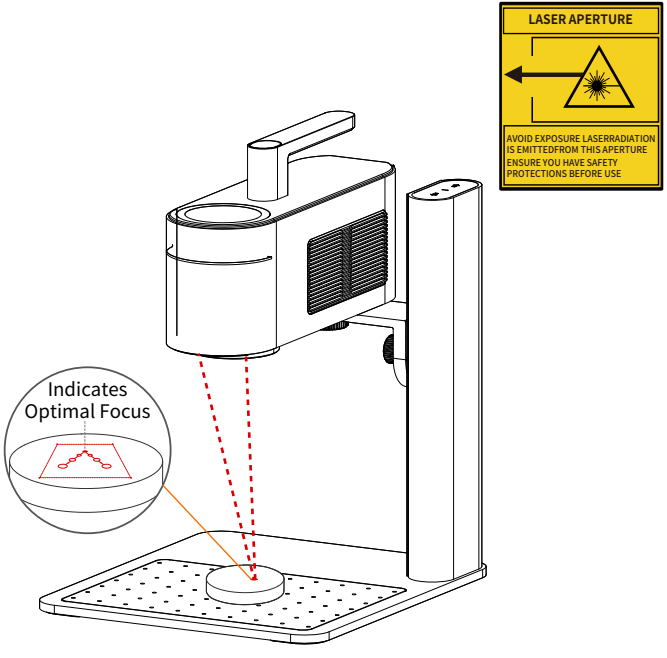

Touch Screen Functions

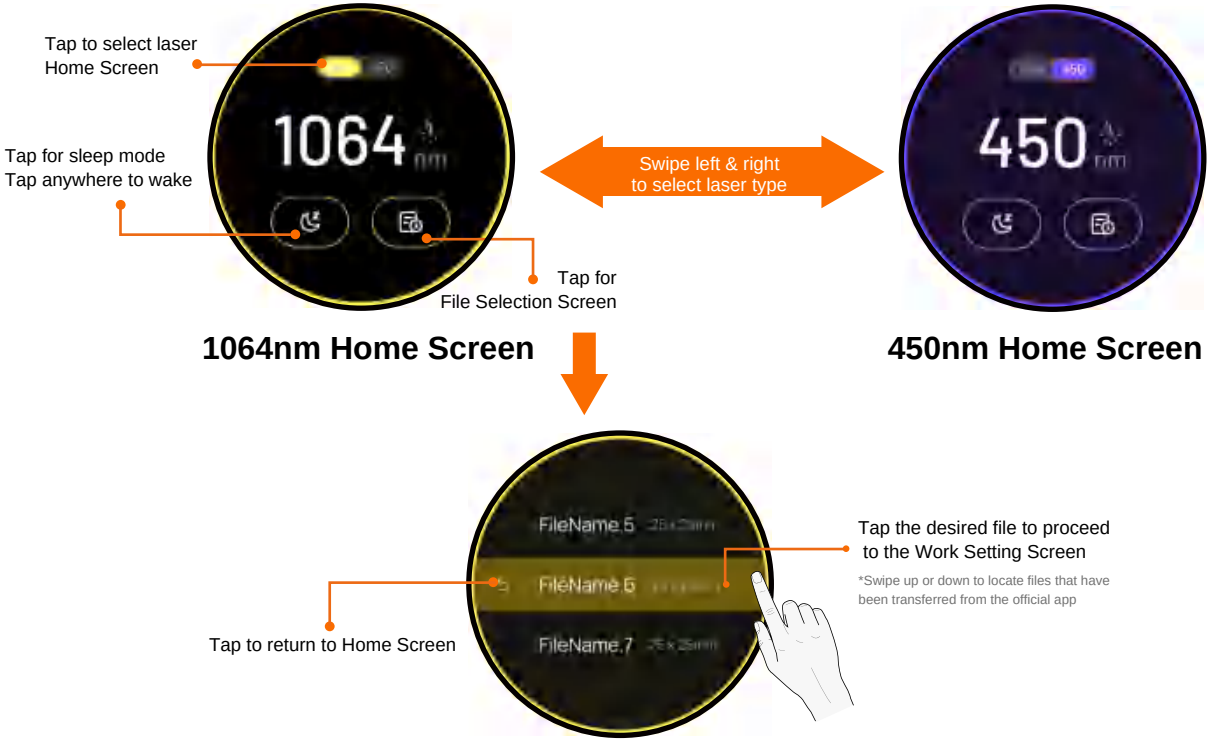

Touch Screen Functions Continued

Tap for
Work Preview Screen

Tap for Working Screen

Work Settings Screen

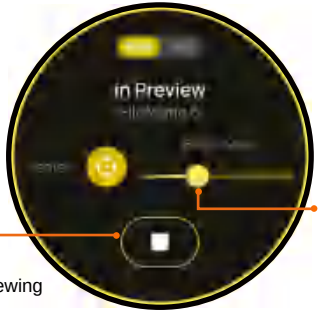

Slide to adjust
the brightness
of preview laser beam

Tap to stop previewing

Work Preview Screen

Pause engraving

Tap to stop working

Working Screen

Oblique Angle Positioning

Use the Angle Adjustment Knob to position the Laser Unit for working on an angle.

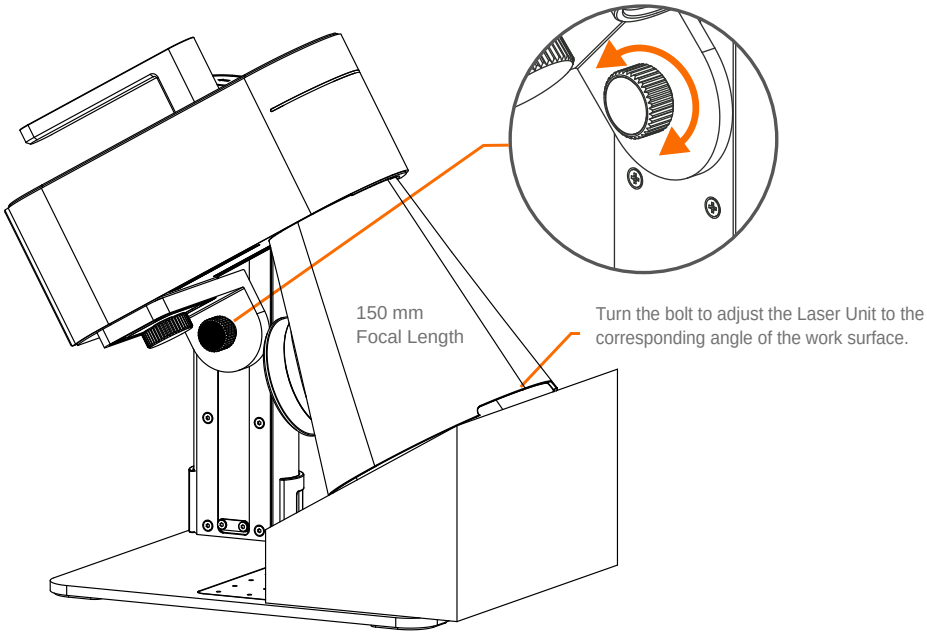

Attaching Alignment Fixtures

1. To secure materials during engraving and for accurate repeat placement, position the Alignment Fixtures to the desired location on the base plate and attach them by tightening the screws.

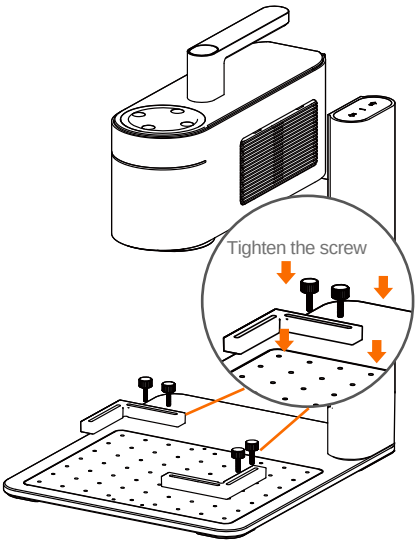

2. Example of attached Alignment Fixtures

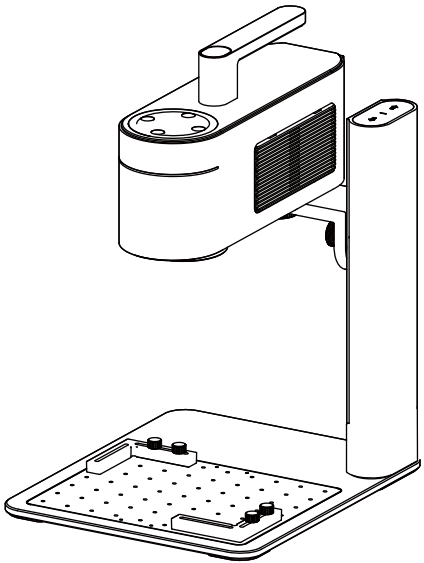

Machine Maintenance

- **The Laser Unit's dust screen is attached magnetically for easy cleaning.**

Original status of the Magnetic Dust Screen. Power off the Laser Unit before you clean the screen.

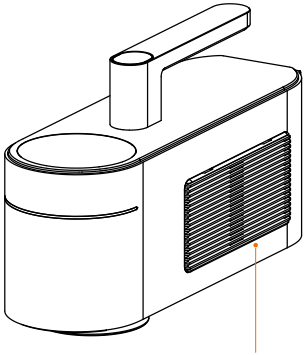

Remove and clean the screen frequently to help maintain the optimal operating condition.

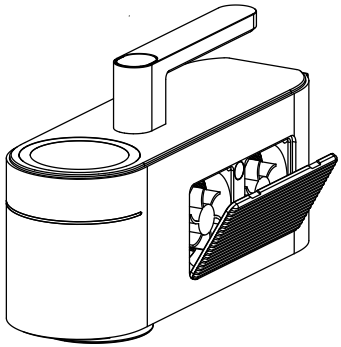

Take care to ensure that moisture or foreignobjects do not get inside the Laser Unit while the screen is removed.

Product Specifications

Size	Laser Unite: 241*82.1*139.7mm Electric stand: 260.5*218*283.5mm protective cover size：176*145*155.7mm
Weight	Laser Unite: 2.2kg Electric stand: 1.8kg Total weight: 4kg
Laser source	1064nm Pulsed Laser 450nm Diode Laser
Laser source output power	2W 1064nm +10W 450nmr
Engraving area	160*120mm (ellipse) 100* 100mmmm (square);
Appearance	Anodic oxidation of aluminum alloy
Document transmission	USB cable and Bluetooth wireless transmission
Supported document format	PC Software: BMP/ JPG/ PNG/ SVG/ G-code Mobile APP: JPG/PNG/G-code/SVG
APP & software connection	Bluetooth connection, USB connection (2402MHz~2480MHz)
APP operating system	Support iOS 9.0+, Android 6.0+, MacOS 10+, Windows 10+
Power input	DC(24V,5A),AC(100-240V,50-60Hz)
Operating temperature range	0℃-65℃
Operating humidity range	5%~80%RH
Safety certification	IEC 60825-1, CE, ROHS, FCC, FDA,CDRH registration , NCC, KC, UKCA, TECLEC

Use Safety Guide

- Before starting the installation of LaserPecker 4, please first check that the equipment is intact and the laser mirror is clean.
- Installation specifications: Before operating LaserPecker 4, please secure the host referring to the Operation Manual (use the accessories with fixing function (protective cover, electric support and third shaft) to support the objects) to avoid falling due to unstable placement.
- Please power the equipment with the power and type (adapter with 24V5A) as indicated in the operation manual.
- Before starting the laser carving, please make sure to take safety protection measures, such as adding protective covers, wearing goggles to prevent eye or skin injury, removing irrelevant items to prevent unnecessary damage caused by laser irradiation, and especially removing flammable and explosive items to prevent fire.
- After starting the laser carving, do not move the equipment, so as not to cause the equipment to stop working due to self-protection, or even affect the final effect of the carving work because the carving objects are removed. To move the equipment or carved objects, please operate before the carving or after the carving is done. Do not move the equipment or items during the laser work.
- Because of the risks of laser, do not bring minors, children, and people with close to the equipment at work.
- Before carving objects using this product, please check that the carved object will not release toxic or harmful gas during the laser burning process to avoid poisoning accidents.
- If odor or smoke is found during the carving, please use the fan to blow away or place it in a spacious and ventilated place.
- Before carving objects using this product, review whether the carved objects have total reflection or diffuse properties. Special attention should be paid to the safety protection of such objects (it is suggested to carving after blackening the carved area with the whiteboard pen).
- Do not use LaserPecker 4 to directly illuminate the human body or pet skin and eyes, so as not to cause irreversible damage.

Precautions

- Please carefully read the [Use Safety Guide] and keep in mind for standard operation.
- This product does not contain any user-replaceable components. Do not attempt to remove LaserPecker 4 or exclude the problem by yourself, regardless of the scenario.
- The working LaserPecker 4 will emit laser. The beam is at risk of burns to the human skin; The damage is extremely serious for the eye parts of the human body or animal (pet). In addition, the screen damage to mobile phones and Pads is also extremely serious. The proper use and maintenance of this product are very important for the safe operation of this product. Please strictly follow the instructions in this manual for the operation and maintenance specifications of this product.
- Be sure to wear protective goggles throughout the operation of LaserPecker 4.
- LaserPecker 4 adopts special laser module, integrating 2nd and 3rd generation. All the materials that can be engraved by 2nd and 3rd generation engraving machines, LaserPecker4 can also engrave, so that users don't have to worry about whether the material can be engraved or not, or whether the engraving effect is satisfactory.

Disclaimer

hank you for purchasing LaserPecker 4. What mentioned in this article refers to your security and legal interests and responsibilities. Before using this product, please carefully read this article to ensure the correct setting of the product. Failure to operate following the instructions and warnings described herein may cause injury to you and people around or cause damage to LaserPecker 4 or other surrounding items. Operating this product means that you have carefully read the disclaimer and warning information, understood, recognized and accepted all terms and contents of this statement. You promise to be fully responsible for the use of the product and possible consequences. You commit to use this product only for a normal purpose, and agree to this clause and any relevant regulations, policies and guidelines developed by Hingin. LaserPecker 4 is not liable for damage, injury, and any legal liability arising from the direct or indirect use of the product. Users shall follow all safety guidelines referred to herein.

Warning

- Before operating LaserPecker 4 equipment, please carefully read the operation contents and strictly observe the operating procedures.
- This equipment uses four types of lasers (intense laser radiation), However, it has gained laser Class 1 Certification when eqipped with a LaserPercker square laser safety cover. which may cause the following accidents: 1) Light up the surrounding flammable materials; 2) During the laser operation, other radiation, harmful gases, toxic gases or smelly gases may be produced due to different laser radiation objects; 3) Direct exposure to laser emission may hurt human body. Therefore, the operator must keep a distance from the equipment, and wear protective equipment (such as goggles, protective covers, protective clothing or firefighting equipment, etc.). It is strictly prohibited to pile up flammable and explosive items around the workbench and equipment. The working environment must be kept well ventilated.
- There may be risks during the laser working process. The users should carefully consider whether the material of the carved object is suitable for laser operation.
- The working voltage of the equipment is 24V 5A. It should be powered using the adapter of suitable specification. Operation during overload or voltage instability is strictly prohibited. Under the premise that the power supply (such as the patch board) used by the power plug of this product does not work effectively, the power supply cannot be connected, otherwise there will be a dangerous risk of electric shock.
- This product is internally equipped with precise and dangerous laser source components. The equipment is strictly prohibited to work near appliances with strong electromagnetic interference because this may cause electromagnetic interference. When the laser source is turned on, there will be laser emitted at the speed of light. The user must avoid direct exposure to the laser beam.
- It's strictly prohibited to place any irrelevant object of total reflection or diffuse reflection in the equipment, in case the laser may be reflected to human body or inflammables.
- Before carving objects using this product, please ensure that the emissions resulting from laser exposure to the carved objects meet the local laws and regulations.

Warranty Terms

- To the extent permitted by law, this warranty is exclusive and supersedes all other express or implied or legal warranty conditions (including in any case for a particular purpose, provided by the statute or any other circumstance), including, but not limited to, any liability derived the commodity suitable for a particular use. In addition, Hingin will not be responsible for any unexpected, special, indirect, or derivative damage (it may originate from use, misuse, nonuse, or product defects).

- When consumers apply for warranty service, they have the obligation to back up all the important data in advance. The data will disappear during the maintenance process, such as the replacement of parts or the updated product software version, and Hingin will not provide data backup or the complete data and set value.

- The product is entitled to free shipping and free maintenance warranty within 15 days of the shipping date. Express fee will be paid after 15 days in the warranty period.

- For any products following the replacement or maintenance, Hingin will give a longer warranty of the remaining warranty period of the original product or the 30-day warranty following the replacement.

- When consumers apply Hingin for warranty services for the products sold in non-Chinese mainland areas, due to the laws and regulations, safety regulations, tariffs, maintenance technology and parts inventory, parts sold in countries and regions cannot be sent back to Hingin for warranty services, for which Hingin can only provide limited warranty services. Therefore, consumers not in mainland China, whether they are within the warranty scope, need to seek warranty services through the path authorized by the original country, and will charge the inspection and labor processing fees. If the country for the recipient levies additional tariff, it will be borne by the consumer itself; Consumers who apply for warranty service directly to Hingin may take the similar measures.

- Distributors may sell Hingin products to consumers in non-Chinese mainland areas. If they provide value-added services different from this warranty, the services are valid only for the area sold by distributors and unrelated to this warranty service.

- Processing quality is highly related to user operation, processing material and processing environment, not within the warranty scope.

FCC Requirement

- Any changes or modifications not expressly approved by the party responsible for compliance could void the user's authority to operate the equipment.
  This device complies with Part 15 of the FCC Rules. Operation is subject to the following two conditions:
- (1) this device may not cause harmful interference, and
  (2) this device must accept any interference received, including interference that may cause undesired operation.
  Note: This equipment has been tested and found to comply with the limits for a Class B digital device, pursuant to Part 15 of the FCC
- Rules. These limits are designed to provide reasonable protection against harmful interference in a residential installation. This equipment generates, uses, and can radiate radio frequency energy, and if not installed and used in accordance with the instructions, may cause harmful interference to radio communications. However, there is no guarantee that interference will not occur in a particular installation. If this equipment does cause harmful interference to radio or television reception, which can be determined by turning the equipment off and on, the user is encouraged to try to correct the interference by one or more of the following measures:
  – Reorient or relocate the receiving antenna.
  – Increase the separation between the equipment and receiver.
  – Connect the equipment into an outlet on a circuit different from that to which the receiver is connected.
  – Consult the dealer or an experienced radio/TV technician for help.

  This equipment complies with FCC radiation exposure limits set forth for an uncontrolled environment. This equipment should be installed and operated with a minimum distance of 20cmbetween the radiator & your body. This transmitter must not be co-located or operating in conjunction with any other antenna or transmitter.

  " CAUTION: Any changes or modifications not expressly approved could void the user's authority to operate the equipment."

  This device contains licence-exempt transmitter(s)/receiver(s) that comply with Innovation, Science and Economic Development Canada's licence-exempt RSS(s). Operation is subject to the following two conditions:
  (1) This device may not cause interference.
  (2) This device must accept any interference, including interference that may cause undesired operation of the device.

  L'émetteur/récepteur exempt de licence contenu dans le présent appareil est conforme aux
  CNR d'Innovation, Sciences et Développement économique Canada applicables aux appareils radio exempts de licence. L'exploitation est autorisée aux deux conditions suivantes :
  1) L'appareil ne doit pas produire de brouillage;
  2) L'appareil doit accepter tout brouillage radioélectrique subi, même si le brouillage est susceptible d'en compromettre le fonctionnement.

LaserPecker

Copyright

- The copyright of this manual is the right of the software and hardware involved in the product, which belongs to Shenzhen Hingin Co., Ltd. (hereinafter referred to as "Hingin"). LaserPecker is the registered trademark of Hingin.
- The information in this manual may be changed without notice; The information in this manual does not constitute a commitment of the Company. Please learn about the latest update from https://www.laserpecker.net.
- The contents of this manual shall not be rewritten or forwarded in any form or for any purpose without the written permission of the Company.

Shenzhen Hingin Co., Ltd.

We support global online technical support services for this product. If you have any problems during your use, please contact us.

Email:support@laserpecker.net | Tel: +86 0755-28913864