Cradlewise

USER GUIDE

All-in-One Smart Bassinet,
Crib & Baby Monitor

Birth to 24 Months

Read all instructions BEFORE assembly of the product. Keep this guide for future use.

Welcome

Congratulations! Thank you for choosing Cradlewise to be a part of your parenting journey—we're thrilled to welcome you to our community.

Sleep plays a salient role in a baby's development, especially during the first two years. It has an overarching impact on everything from nutrition and brain development to your child's mood and milestones. And when babies don't sleep well, it affects parents too—their energy levels, relationships, and mental health.

We set out to make the crib we wished we would have had as parents. Cradlewise isn't just a piece of furniture but a helpful pair of hands. It allows babies to sleep better and longer. And in turn, it gives parents some peace of mind.

We built a crib with the ability to detect your baby's earliest wake-up signs and respond before they cry, creating a soothing environment where your little one can get a more continuous stretch of sleep.

The beauty of Cradlewise is that it will be learning your baby's schedule right along with you, and forecasting sleep and wake-up times. Customize the motion and sound settings to find the perfect sleep recipe that works for your little one.

Inspired by the instinctual, calming way that a parent bounces their baby in their arms as they settle down to sleep, Cradlewise is the solution to giving natural care when you need a rest yourself.

Because when babies get higher-quality sleep, it allows us to be well-rested and parent better.

Sleep well!

Radhika

Co-Founder & CEO

What's in This Guide?

3 Welcome

4 What's in This Guide?

5 What Makes Cradlewise the World's Smartest Crib?

6 What's in the Box?

10 Assembling Cradlewise

25 Instructions for First-Time Setup

26 Connected App for Monitoring

28 GREENGUARD Gold Certified

29 Winning With Cradlewise

30 Customize Cradlewise for Your Baby

31 Personalize Sleep Tracks

32 Graduating From Using Bounce

33 How To Convert From Bassinet to Crib Mode

36 How To Convert From Crib to Bassinet Mode

40 Caring for Cradlewise

41 Official Warnings

46 FCC Compliance

48 Caution

50 100-Night Trial

51 Support

What Makes Cradlewise the World's Smartest Crib?

24-Month Sleep Companion

Cradlewise is a bassinet, crib, baby monitor, sound machine, and a sleep tracker, all rolled into one. It's a complete sleep solution for newborns to toddlers.

Noiseless Bouncing

The whisper-quiet patented bouncing mechanism ensures you and your little one sleep peacefully without being disturbed.

Built-In Smart Monitor

Keep a close eye on your little one using the connected app's live video stream. Track your baby's sleep and get insights for maintaining a consistent sleep routine.

Self-Learning Crib

The monitor senses early wake-up signs and starts bouncing automatically to soothe your baby back to sleep. It learns and adapts to your little one's unique sleep patterns.

Customizable Sleep Tracks

Choose from white, pink, and brown noise options selected to make your little one fall asleep faster (and sleep better).

Caregiver Team

Grant access to grandparents, caretakers, or other loved ones within the Cradlewise App so they can stay connected to your baby.

What’s in the Box?

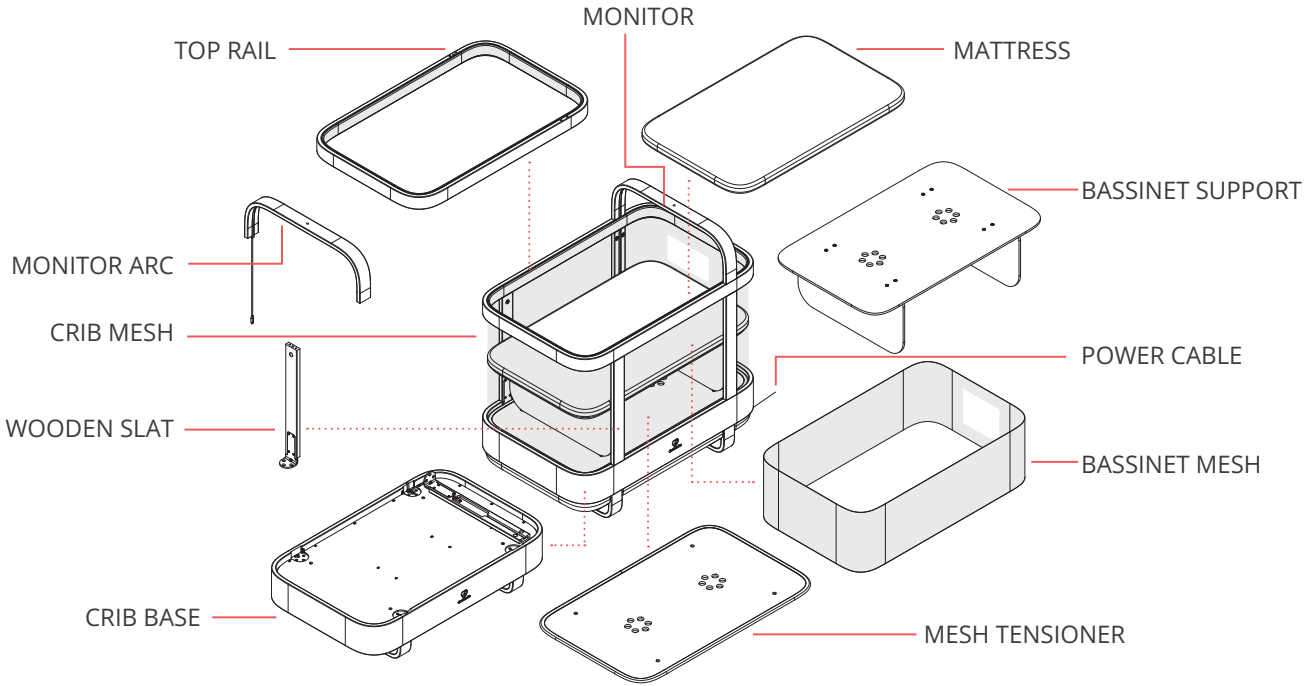

MESH TENSIONER

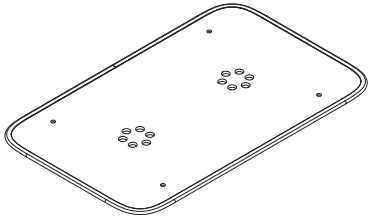

MATTRESS PACK

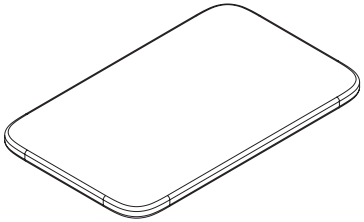

TOP RAIL

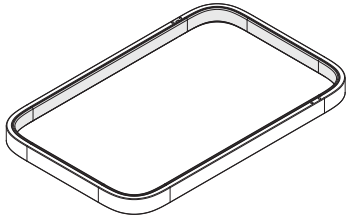

USER GUIDE

MONITOR CABLE COVER

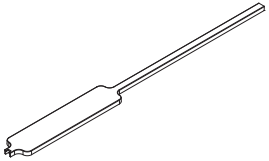

MONITOR ARC

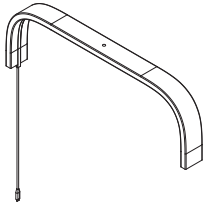

POWER ADAPTER

WOODEN SLATS x3

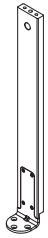

BASSINET BOARD

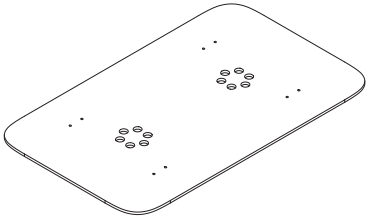

CRIB MESH

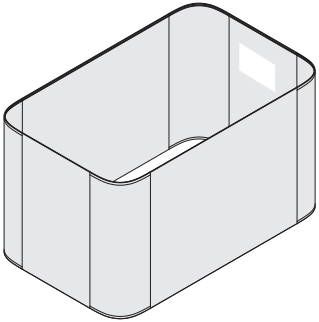

BASSINET BRACKETS x4

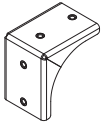

BASSINET LEGS x2

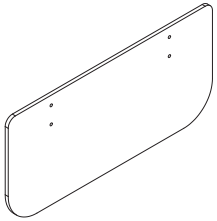

CRIB BASE

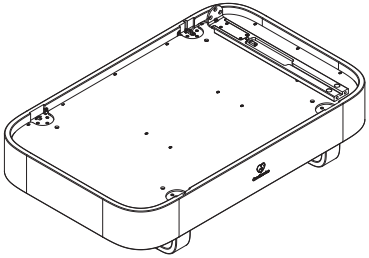

BASSINET MESH

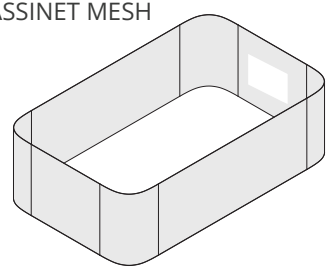

FITTED SHEETS x2

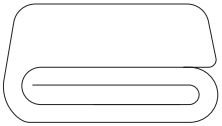

SCREWDRIVER

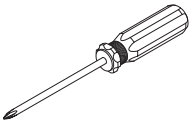

ALLEN KEY

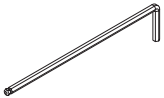

WOOD DOWELS (A) x6

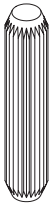

CAM LOCK BOLTS (B) x9

M6X12 BOLTS (C) x12

M6X16 BOLTS (E) x16

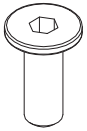

M6X25 BOLTS (D) x4

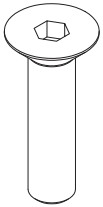

CAM LOCK NUTS (F) x9

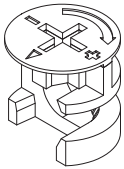

NOTE: SPARES INCLUDED

Assembling Cradlewise

1. Place the crib base on the floor.
2. Pull the cardboard spacers from the gap between the wooden frame and legs.
3. Lift the attached slat.

Assembling the crib base:

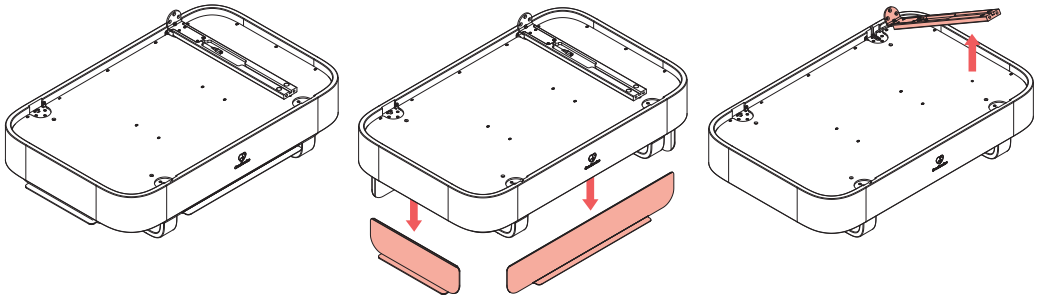

Assembling the slats:

4

Screw the attached slat to the base with 3 **(C)** bolts using the Allen key.

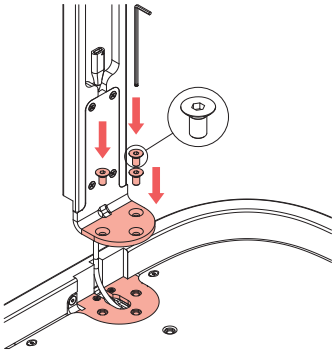

5

Tighten the 3 **(C)** bolts using the Allen key's longer arm.

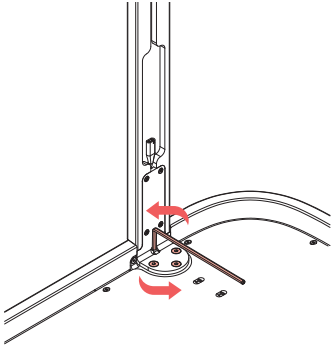

6

Screw 3 wooden slats into the crib base with 3 **(C)** bolts each (9 bolts total) using the Allen key.

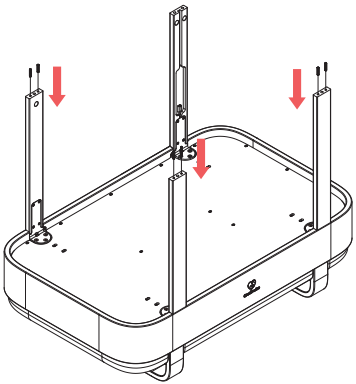

7

Insert wooden dowels **(A)** **halfway** into the 3 slats.

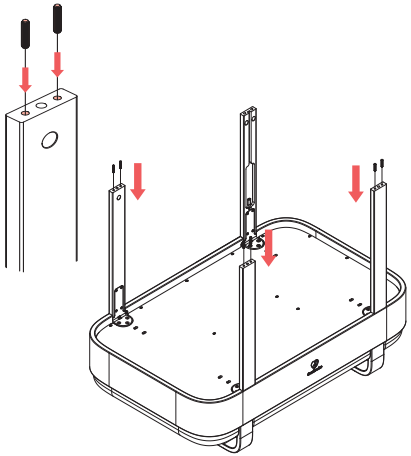

8

Screw 5 cam lock bolts **(B)** in the top rail.

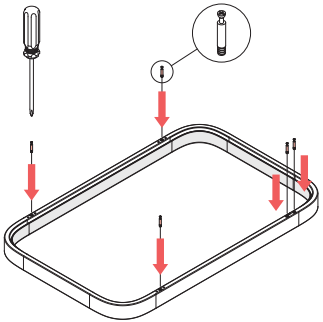

Assembling the top rail:

9

Flip the top rail, match 2 cam lock bolts with the holes in the fixed slat and insert it.

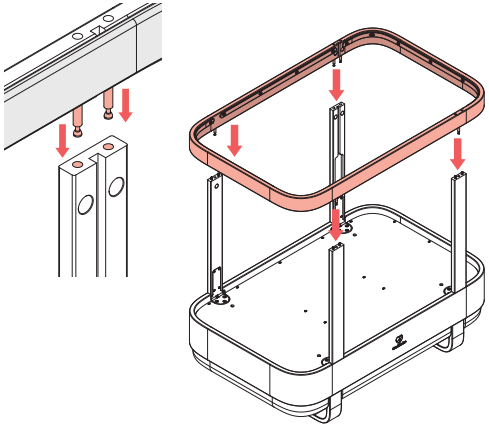

10

Affix the top rail in place by aligning the cam lock nuts **(F)** in the holes and rotating them clockwise, using the provided screwdriver.

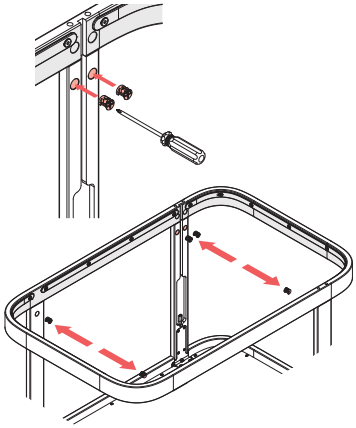

Mounting the monitor arc:

11

Screw 4 cam lock bolts **(B)** into the monitor arc.

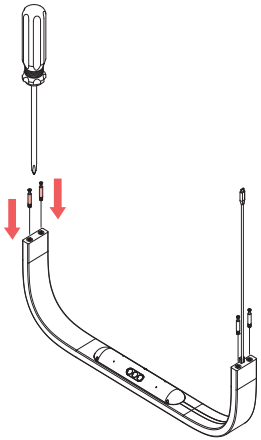

12

Push the cord hanging from the monitor arc through the cavity on the top rail. Then, pull the line from the other end.

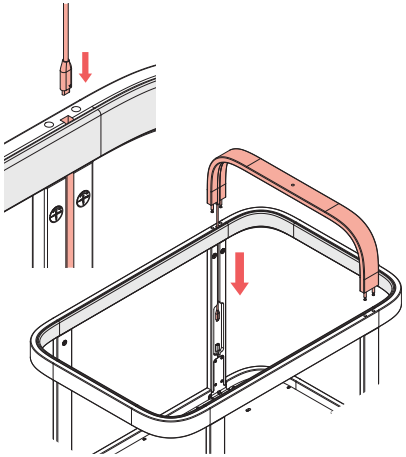

13

Raise the flap on the top rail to see the holes for cam lock nuts.

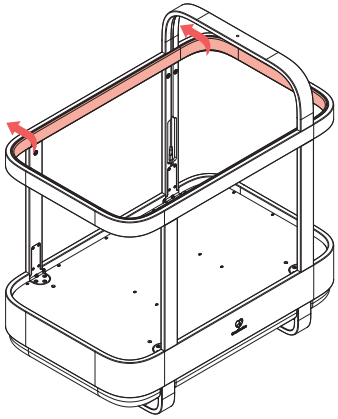

14

Connect the monitor arc to the top rail by aligning the cam lock nuts **(F)** in the holes and rotating them clockwise, using the provided screwdriver.

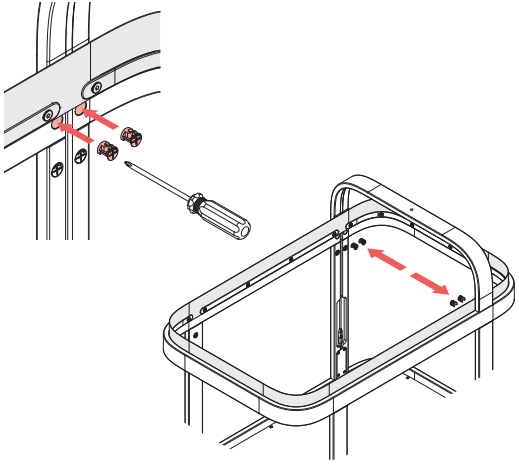

15

On the cord attached to the monitor arc, align the triangular markings facing the same side and connect the USB cord. (**TIP:** If the cords are not reaching each other, gently pull the bottom cord until the two ends meet.) If the cord is longer than required, fold it within the cavity.

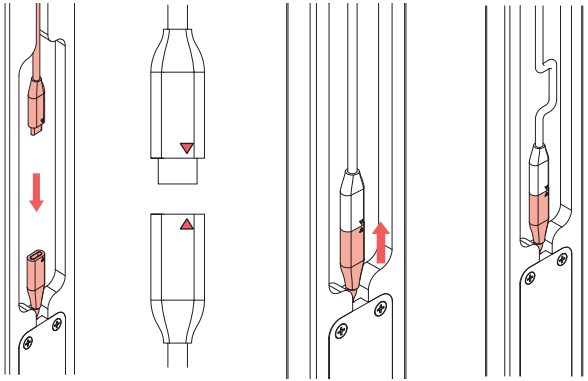

16

Cover the USB cord with the monitor cable cover. Press firmly for a snug fit. (**TIP:** Insert the top end in first.)

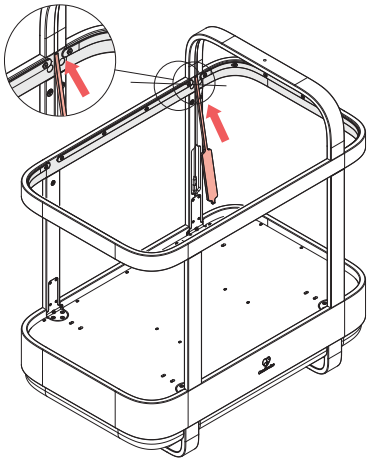

Attaching the crib mesh:

17

Place the crib mesh inside the crib. Align the zip end of the mesh with the zipper beneath the flap on the top rail.

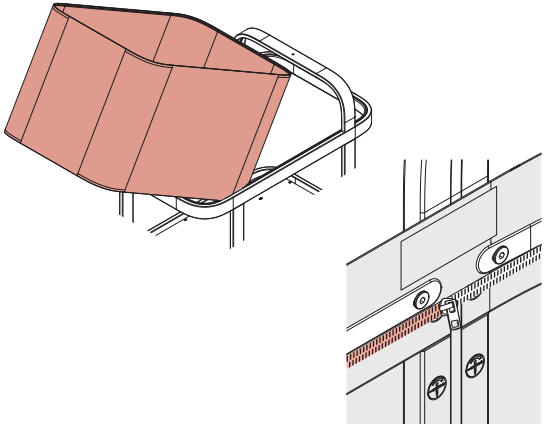

18

Attach the crib mesh to the top rail using the zipper.

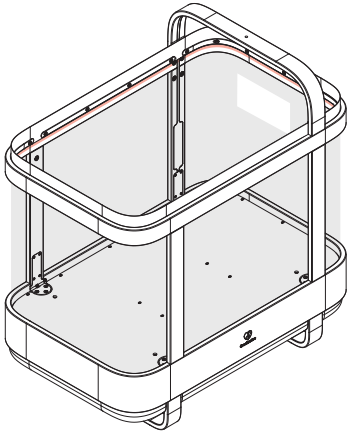

19

Close the flap on the top rail.

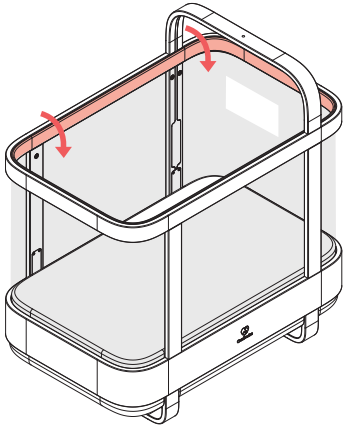

20

Place the mesh tensioner inside the crib. (**TIP:** You may have to use some force to ensure a snug fit).

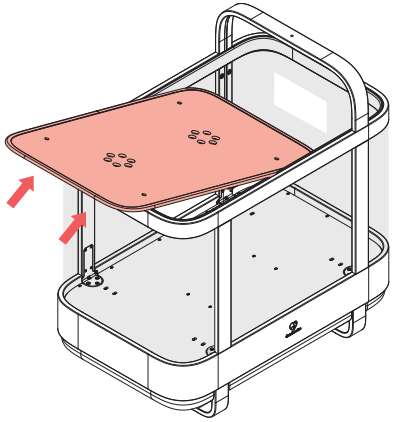

21

Press down the mesh tensioner from all sides to ensure the crib mesh is uniformly taut.

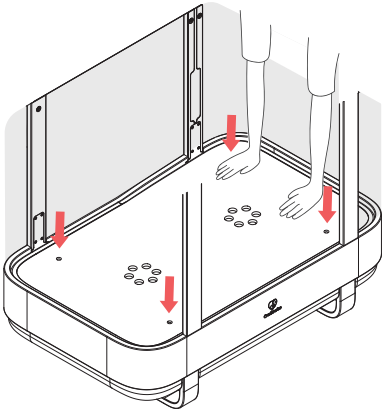

22

Screw the mesh tensioner to the crib base using 4 **(D)** bolts. (**TIP:** If you find it hard to engage the bolts, push the mesh tensioner down with one hand while trying to screw them.)

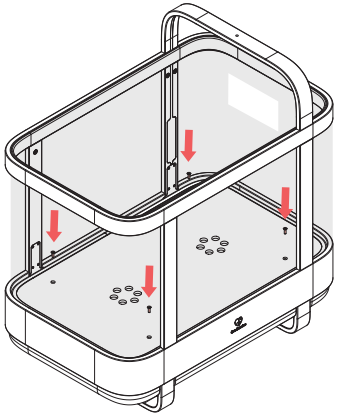

For **CRIB MODE**, skip straight to step 32 on page 24.

Assembling the bassinet:

23

Attach the metal brackets to the bassinet leg using 4 **(E)** bolts. Ensure that you tighten all of the bolts.

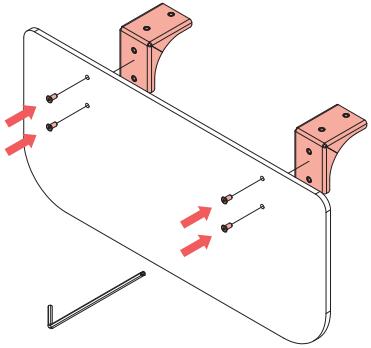

24

Assemble the bassinet support by attaching the bassinet board to the bassinet legs using 8 **(E)** bolts.

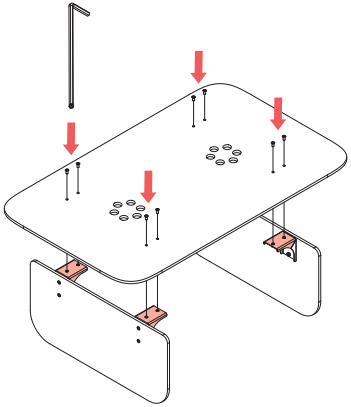

25

Place the bassinet support on the mesh tensioner.

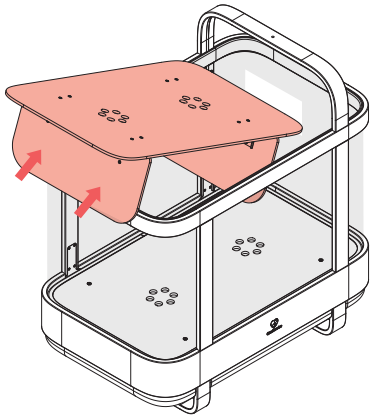

26

Raise the top flap.

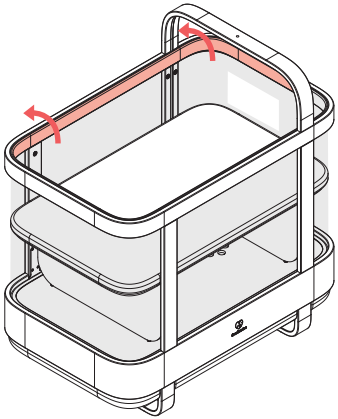

27

Place the bassinet mesh inside the crib.

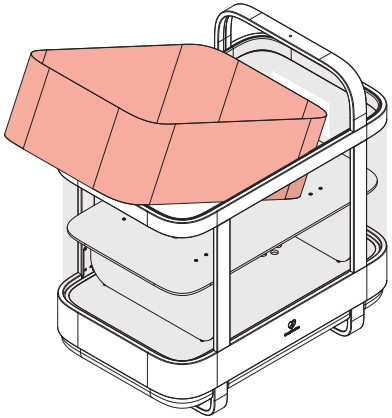

28

Align the seam on the crib mesh with the one on the bassinet mesh and attach the bassinet mesh securely to the velcro.

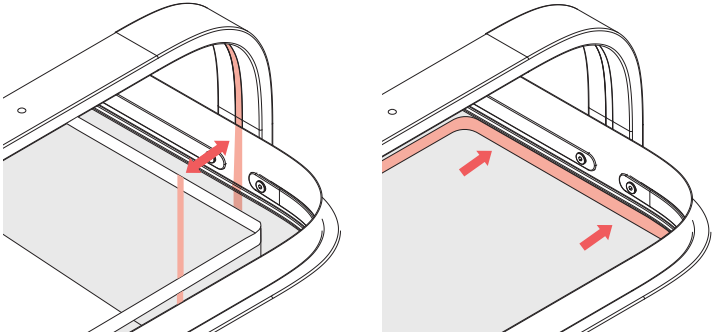

29

Close the flap and attach it to the velcro on the bassinet mesh.

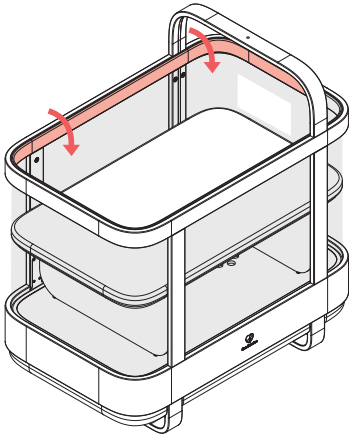

30

Place the bedding (mattress, cover, and fitted sheet) on top of the mattress support.

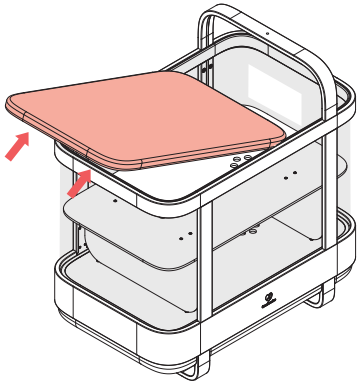

31

Press the mattress firmly down on all edges and corners, ensuring it's not raised on the sides.

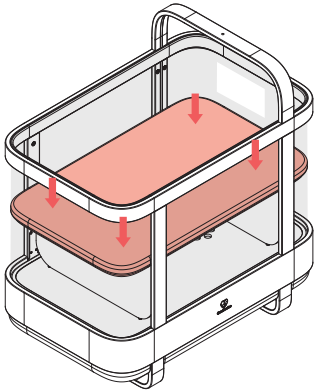

Your baby's bassinet is ready! Now you deserve a nap, too.

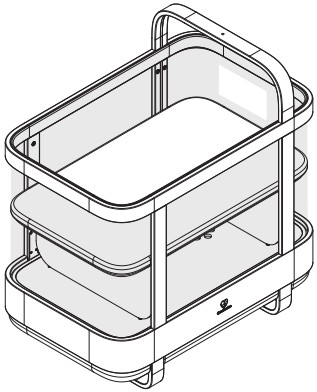

For crib mode:

32

Place the bedding (mattress, cover and fitted sheet) on top of the mesh tensioner.

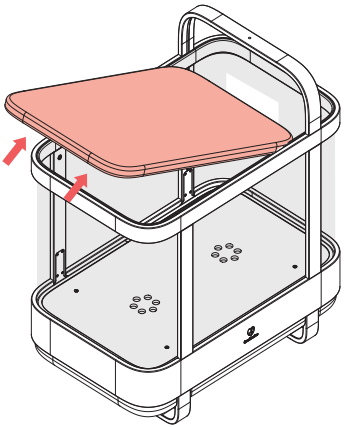

Continued from Step 22.

33

Press the mattress firmly down on all edges and corners. Ensure that the mattress is not raised on the sides.

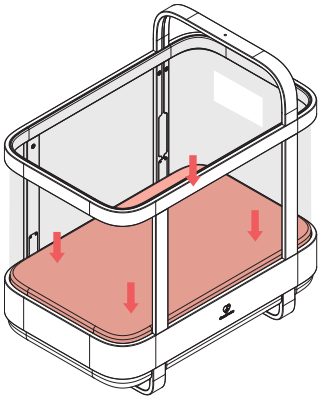

YAY, your baby's crib is ready! Sleep tight.

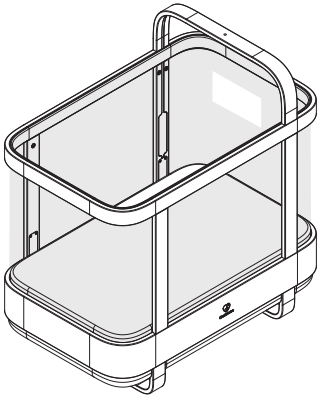

Instructions for First-Time Setup

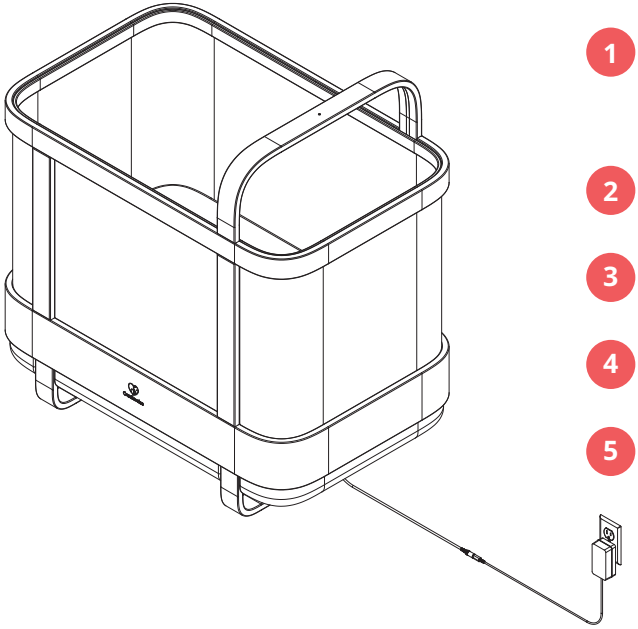

1. Place the crib in a position not more than 6 feet away from an electrical outlet (100-240 VAC 50/60 Hz). Connect the provided power adapter to the electrical outlet.
2. Connect the power adapter DC jack to the female jack of the white cable attached to the crib.
3. You should see a slow-blinking white LED on top of the monitor arc.
4. Once the crib is ready, the LED slowly blinks in a light blue color.
5. Install the Cradlewise App on your mobile phone and follow the instructions.

Connected App for Monitoring

Built-in peace of mind.

Live Video

Keep a close eye on your little one through a live video stream on your phone. The field of view of the camera is restricted to the crib.

Night Vision

Monitor your baby without turning on the lights and disturbing anyone.

Persistent Audio Monitoring

Keep an ear out for your baby using the audio monitoring feature even after exiting the app.

Notifications

Stay connected with your baby. Get notified when your little one stirs, falls asleep, or needs your attention.

Sleep Analytics

Track your baby's sleep and get insights to help them sleep better.

Add a Caregiver

Allow loved ones to check in on your baby.

GREENGUARD Gold Certified

GREENGUARD

PRODUCT CERTIFIED FOR
LOW CHEMICAL EMISSIONS
UL.COM/GG
UL 2818

GOLD

Clean indoor air is especially important for nurseries and children's bedrooms. Our GREENGUARD Gold Certified crib has been screened for more than 10,000 chemicals and volatile organic compounds (VOCs) that are commonly known to pollute indoor air, certifying that it contributes to cleaner air in your home.

Winning With Cradlewise

Do what works for your family

Trust your own instincts. You know your baby best. If you feel that your child needs your presence and touch, pick them up and soothe them to sleep.

Consider room-sharing

The American Association of Pediatrics recommends sleeping in the same room as your baby (but not bed-sharing), ideally for six months to one year. Various studies have shown that this reduces the risk of SIDS.

Celebrate the small sleep wins

Whether you got your little one to go down for their nap for the first time without crying or were able to sleep for a few solid hours uninterrupted, take time to acknowledge the victories along the way.

Create a healthy sleep environment

If your child is too hot or cold, they will not want to sleep. Reduce the light levels in your home before bedtime. Set a calming tone by singing lullabies, swaddling or putting on a sleep sack.

Customize Cradlewise for Your Baby

Every baby is unique. Find the mode and settings that best suit your child's needs.

Auto Mode = It automatically starts bouncing when your baby stirs and stops once they fall asleep

In this mode, the built-in monitor senses your baby's early wake-up signs and soothes them to sleep when needed.

Light Sleepers

Does your little one wake up at the slightest noise, even when the floor creaks? We've been there—motion and sound will create a soothing environment that drowns out external distractions.

Fussy Sleepers

Babies who require significant time and effort to calm down before nodding off to bed may benefit from extra TLC.

Daytime Naps

If your baby resists taking naps or jolts awake shortly after you put them down, Auto Mode can lend a helping hand in prolonging their naps.

Sleep Regressions

Auto soothing can be especially helpful during challenging phases like sleep regressions, teething, or when your little one is sick.

Manual Mode = All of the smart features are disabled

You know your baby best. Use Manual Mode when you want to take complete control of motion and sound.

Personalize Sleep Tracks

Create custom sleep tracks using the Cradlewise App

Your crib has a built-in noise machine that drowns out the surrounding disturbances and helps safeguard your little one's sleep.

Choose White, Pink, or Brown Noise

White noise resembles the sounds of the womb and can sound a little ear-piercing (like TV static). Comparable to the prevalent white noise, pink noise frequencies are gentler and less intense—optimal for sleep. It sounds like the rustling of leaves. Brown noise has lower, deeper frequencies, similar to the roar of a river current or heavy rainfall.

Select Nature Sounds

Choose from various soothing sounds, including rainfall and ocean waves.

Overlay Heartbeat

Layer in heartbeat or breathing sounds, which will help recreate the feeling of their former home: the womb.

Graduating From Using Bounce

Cradlewise is minimalist in its approach to soothing

Cradlewise is minimalist in its approach to soothing. It mimics what you would have done as a parent. When the baby stirs, Cradlewise starts bouncing at a low intensity and increases the bounce as needed. When the baby is soothed back to sleep, the bounce automatically stops.

As your child grows and starts demonstrating self-soothing cues, you can gradually begin to reduce the sensitivity of your smart crib, so it takes longer for the bouncing motion to kick in. You and your baby are the best judges for timing this transition.

Reducing sensitivity is akin to taking the training wheels off a bike. By dialing it down gradually, you are teaching your child to self-soothe. But you always have the comfort of adjusting the sensitivity setting for those tough times when they've had a vaccination or are going through a sleep regression. Gradually, your child will learn to self-soothe without the need for motion at all.

It can take up to a month to complete this process. Once your little one is ready, toggle on the "disable bounce completely" option within App Settings.

How To Convert from Bassinet to Crib Mode

Cradlewise in Bassinet Mode

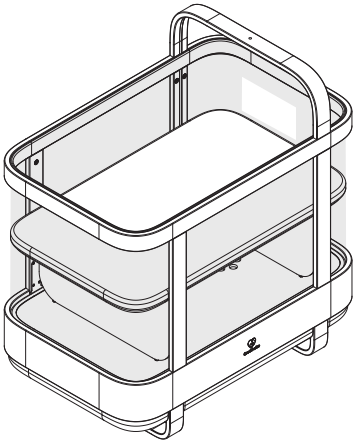

1

Remove the bedding (mattress, cover and fitted sheet).

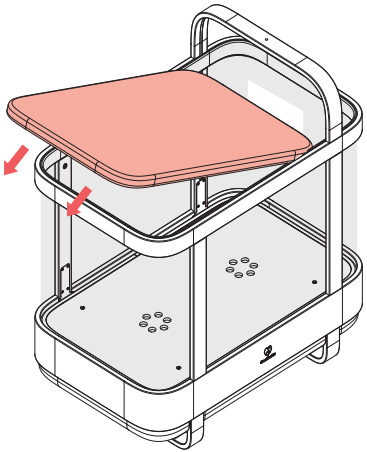

2

Open the flap.

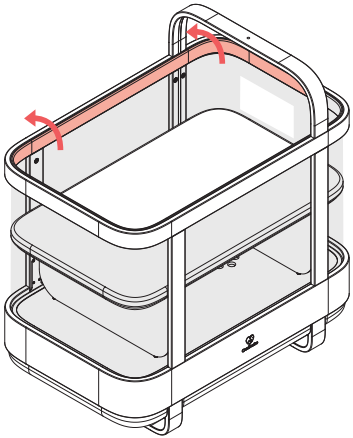

3

For removing the bassinet mesh, detach the bassinet mesh velcro as shown below.

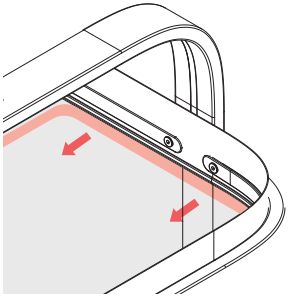

4

Once the bassinet mesh is free from all sides, remove the bassinet mesh.

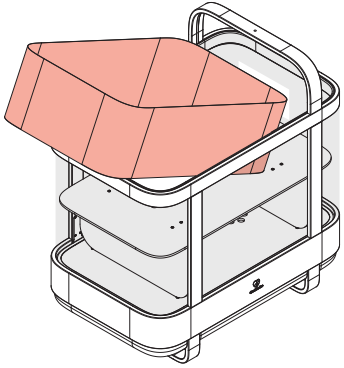

5

Close the crib mesh flap.

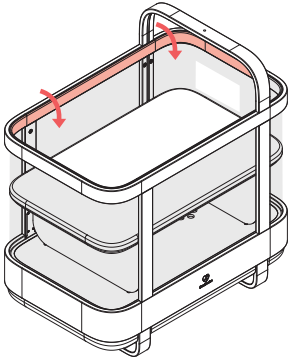

6

Remove the bassinet support.

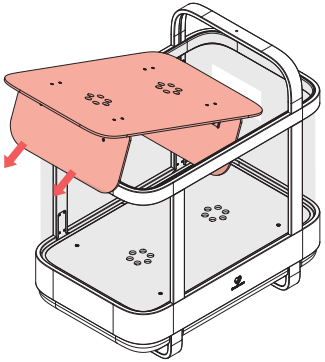

7

Disassemble the bassinet support and place it back in the box.

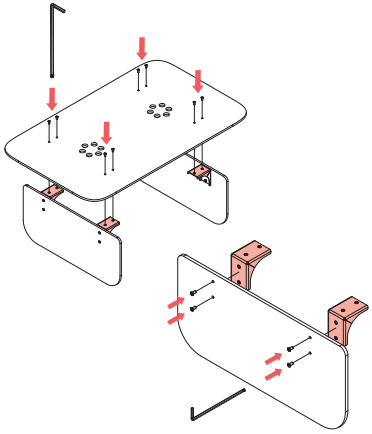

8

Place the bedding (mattress, cover, and fitted sheet) on the mesh tensioner.

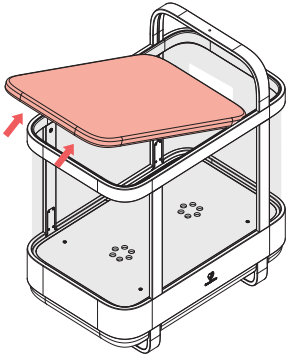

9

Press the mattress firmly down on all edges and corners to make sure that the mattress is not raised on the sides.

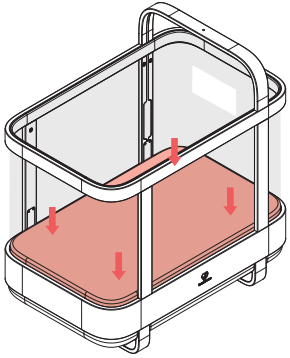

The crib is ready!

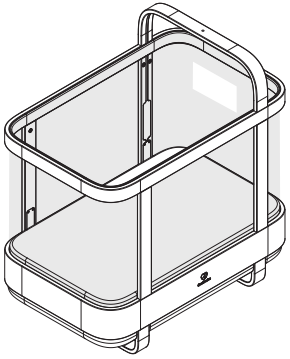

How To Convert From Crib to Bassinet Mode

Are you welcoming another bundle of joy to your family after using Cradlewise with your last child? Here's how to reassemble your crib back to bassinet mode.

Cradlewise in the Crib Mode

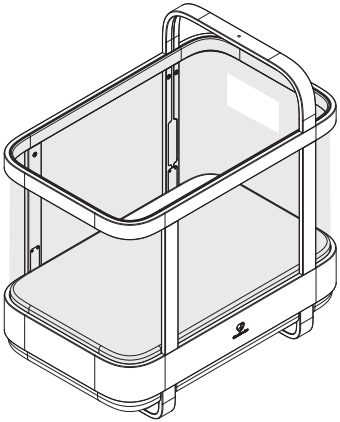

1

Remove the bedding (mattress, cover and fitted sheet).

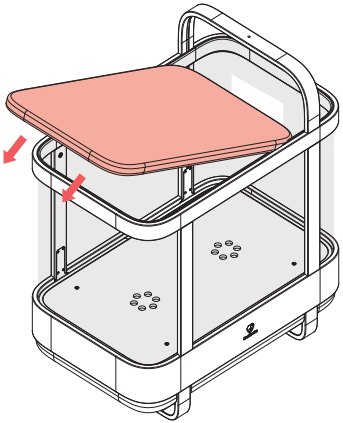

2

Attach the metal brackets to the bassinet leg using 4 **(E)** bolts.

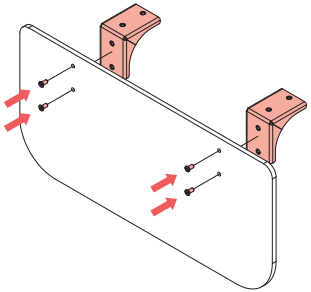

3

Assemble the bassinet support by attaching the base to the bassinet legs using 8 **(E)** bolts.

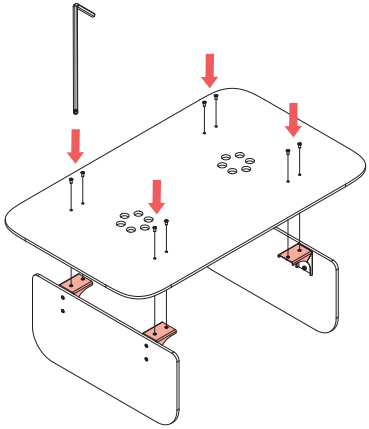

4

Place the bassinet support on the mesh tensioner.

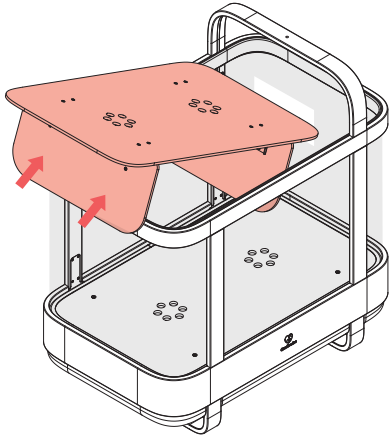

5

Raise the top flap.

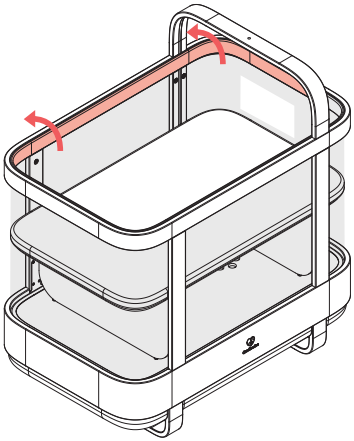

6

Place the bassinet mesh inside the crib.

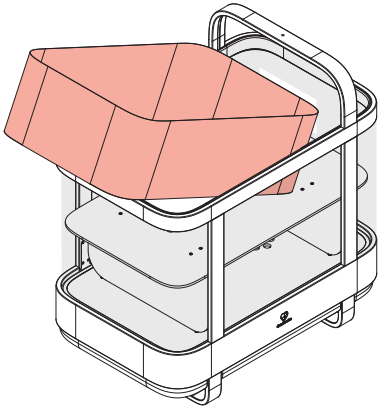

7

Align the seam on the crib mesh with the one on the bassinet mesh and attach the bassinet mesh securely to the velcro.

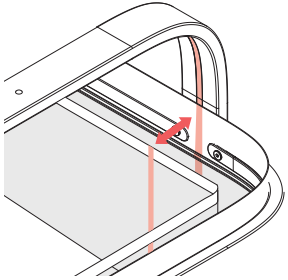

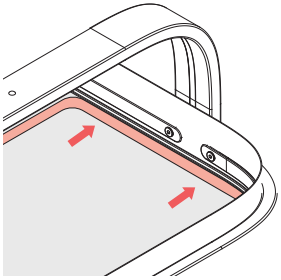

8

Close the flap and attach it to the velcro on the bassinet mesh.

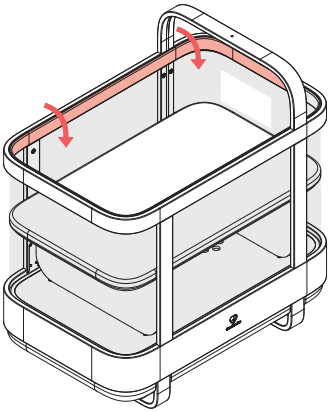

9

Place the bedding (mattress, cover and fitted sheet) on top of the mattress support.

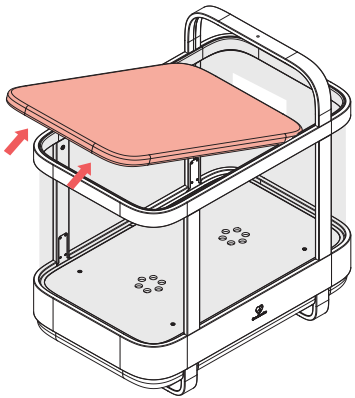

10

Press the mattress firmly down on all edges and corners to make sure that the mattress is not raised on the sides.

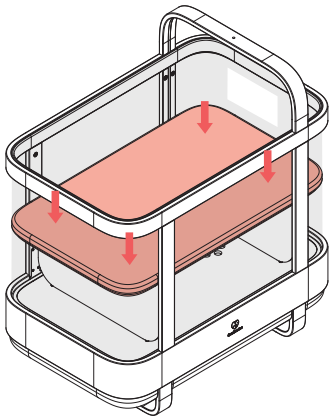

Your bassinet is now ready to be used again!

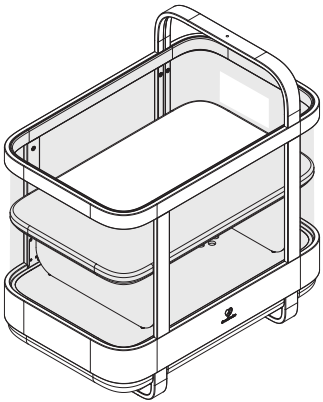

Caring for Your Cradlewise

Cleaning Mattress Core

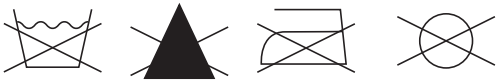

- If needed, use a regular dry fabric to remove dust from the mattress core.
- Do not wash or use any damp cloth to clean the surface.
- Do not bleach.
- Do not iron.
- Do not dry clean.

Note: Do not remove the cover of the mattress core.

Cleaning Mattress Cover, Fitted Sheet, Bassinet Mesh and Crib Mesh

- Machine wash cold, gentle cycle. Wash separately or with similar colored laundry in cold water.
- Do not bleach.
- Tumble dry, no heat.
- Do not iron.
- Make sure to dry the mattress cover completely before using it again.

⚠ WARNING

Warnings for product when mattress pad is located in the upper position as a bassinet

FAILURE TO FOLLOW THESE WARNINGS AND THE INSTRUCTIONS COULD RESULT IN SERIOUS INJURY OR DEATH.

- Use only the mattress pad provided by Cradlewise, Inc. (which must be at least 37.6 in. long by 23 in. wide and not more than 1.5 in. thick). Check proper fit of mattress. The maximum gap between mattress and inside of crib border (or edge) should be no more than 0.5 in. (13 mm)
- Press the mattress firmly down on all edges and corners to make sure that the mattress is not raised on the sides.
- Use the fitted sheet which is provided by Cradlewise, Inc. as it is designed to fit securely to the mattress pad.
- NEVER add a pillow, comforter, or another mattress for padding.
- To reduce the risk of SIDS, pediatricians recommend healthy infants be placed on their backs to sleep, unless otherwise advised by your physician.
- Strings can cause strangulation! Do not place items with a string around a child's neck, such as hood strings or pacifier cords. Never suspend strings over a bassinet or cradle or attach strings to toys.

SUFFOCATION HAZARD: Infants have suffocated

- In gaps between extra padding and side of the bassinet/crib, and
- On soft bedding

Use only the pad provided by the manufacturer. NEVER add a pillow, comforter, or another mattress for padding.

FALL HAZARD:

To help prevent falls, do not use this product in the upper mattress position when the infant begins to push up on hands and knees or has reached 18 lb (8.2 kg), whichever comes first.

⚠ WARNING

Warnings for product when mattress pad is located in the lower position as a play yard/crib

Read all instructions BEFORE assembly and USE of product. KEEP INSTRUCTIONS FOR FUTURE USE.

- The product, including side rails, must be fully erected prior to use.
- Strings can cause strangulation! Never place items with a string around a child's neck, such as hood strings or pacifier cords. Never suspend strings over product or attach strings to toys.
- Discontinue use of the product when child is able to climb out or reaches the height of 35 in. (890 mm).
- Child can become entrapped and die when improvised netting or covers are placed on top of product. Never add such items to confine child in product.
- When child is able to pull to standing position, set mattress/ base to lowest adjustment position and remove bumper pads, large toys, and other objects that could serve as steps for climbing out.
- Never place product near a window where cords from blinds or drapes can strangle a child.
- Do not use the crib in bassinet mode without fixing the bassinet mesh. It could lead to entrapment.

- Always provide the supervision necessary for the continued safety of your child. When used for playing, never leave child unattended.
- To reduce the risk of SIDS, pediatricians recommend healthy infants be placed on their back to sleep, unless otherwise advised by your physician.
- Never use this product if there are any loose or missing fasteners, loose joints, broken parts, or torn mesh/ fabric. Check before assembly and periodically during use. Contact Cradlewise, Inc. for replacement parts. Never substitute parts.
- Use only the mattress pad provided by Cradlewise, Inc. (which must be at least 37.6 in. long by 23 in. wide and not more than 1.5 in. thick). Check proper fit of mattress. The maximum gap between mattress and inside of crib border (or edge) should be no more than 0.5 in. (13 mm).
- Press the mattress firmly down on all edges and corners to make sure that the mattress is not raised on the sides.
- Always use the mattress cover and fitted sheet which is provided by Cradlewise, Inc. as it is designed to fit securely to the mattress.
- Never use plastic shipping bags or other plastic film as mattress covers not sold and intended for that purpose. They can cause suffocation.

⚠ WARNING

Infants can suffocate:

- In gaps between a mattress too small or too thick and product sides
- On soft bedding

NEVER add a mattress, pillow, comforter, or padding.
See warning labels sewn on sides of product.

STRANGULATION HAZARD:

Children have STRANGLED in cords. Keep the adaptor cord out of the reach of children (more than 3 ft. / 0.9m away). NEVER attempt to use cord without the protective covering. Check protective covering before each use to ensure that the cord is not exposed to your child. Immediately discontinue use if protective coating is damaged or broken. Do not remove this tag.

FCC Compliance

FCC ID:
2A6EK-SC-6275S-001

This device complies with Part 15 of the FCC Rules. Operation is subject to the following two conditions:

1. This device may not cause harmful interference.

2. This device must accept any interference received, including, an interference that may cause undesired operation.

- **ANY CHANGES OR MODIFICATIONS NOT EXPRESSLY APPROVED BY THE PARTY RESPONSIBLE FOR COMPLIANCE COULD VOID THE USER'S AUTHORITY TO OPERATE THIS EQUIPMENT.**
- **DO NOT USE ANY ADDITIONAL BEDDING OR FIXTURE THAT REDUCES THE DISTANCE BETWEEN THE BABY IN SLEEPING POSITION AND THE CAMERA TO LESS THAN 20CM.**

This equipment has been tested and found to comply with the limits for a Class B digital device, pursuant to part 15 of the FCC Rules. These limits are designed to provide reasonable protection against harmful interference in a residential installation. This equipment generates, uses and can radiate radio frequency energy and, if not installed and used in accordance with the instructions, may cause harmful interference to radio communications. However, there is no guarantee that interference will not occur in a particular installation. If this equipment does cause harmful interference to radio or television reception, which can be determined by turning the equipment off and on, the user is encouraged to try to correct the interference by one or more of the following measures:

- Reorient or relocate the receiving antenna.
- Increase the separation between the equipment and receiver.
- Connect the equipment into an outlet on a circuit different from that to which the receiver is connected.
- Consult the dealer or an experienced radio/TV technician for help.

Caution

- Read all instructions BEFORE assembly and USE of product.
- KEEP THE INSTRUCTION GUIDE FOR FUTURE USE.
- Cradlewise Crib IS NOT A SUBSTITUTE FOR RESPONSIBLE ADULT SUPERVISION. IMMEDIATELY CONTACT YOUR PHYSICIAN IF YOUR BABY IS UNUSUALLY FUSSY OR NOT RESPONDING NORMALLY.
- If you do not have instructions, DO NOT use this product. Please visit www.cradlewise.com to contact us for help.
- NEVER use Cradlewise if any parts are missing or broken. Request replacement parts and instructional literature via cradlewise.com if needed. (DO NOT substitute parts.)
- Convert the product from bassinet to crib if your child is able to push up on hands and knees or at six months of age—whichever comes first.
- For indoor use only.
- This product is not a toy. Do not allow children to play with it.
- Do not pour water or liquids onto Cradlewise Crib.
- Only use the power adapter provided. Use of other power adapters may permanently damage the bed product.
- Never use plastic shipping bags or other plastic film as mattress covers

not sold and intended for that purpose. They can cause suffocation.

- Never use a water mattress with this product.
- Never place more than one infant in it at a time.
- Never carry the Cradlewise Crib with an infant in it.
- Remove your baby from Cradlewise when making readjustments to the crib, such as converting from bassinet to crib mode.
- Press the mattress firmly down on all edges and corners to make sure that the mattress is not raised on the sides.
- Place Cradlewise on a firm, flat floor without any raised surfaces.
- Keep away from open fires and other sources of strong heat, such as electric heaters, gas fires, etc.
- Don't use any objects to elevate the mattress. The AAP cautions that elevation can result in an infant sliding into a position that might make breathing difficult.
- Maintain a spacing of at least 4 in. (10 cm) all around the assembled crib.

100-Night Free Trial

Have your baby sleep in Cradlewise for up to 100 days before deciding if it's right for your family. Your free trial begins the day you place your little one in the crib and start using it.

Your Cradlewise is unlike any other baby bed you've experienced before—please keep in mind that it takes time to adjust. Some babies love it immediately after the first night. For others, it can take up to a week to 10 days.

If for any reason the crib does not work for you, we accept returns and will issue a full refund—no questions asked.

We designed the Cradlewise box to be folded up easily for safekeeping. Please hold on to your original packaging in case you need to make a return—leading to less clutter inside your home and more sustainability for Mother Earth.

Plus, storing your crib in the original box keeps it in pristine shape for any future additions to your growing family.

Support

Questions?

We're here to support you through every step of your sleep journey. Our customer experience team is available seven days a week.

Help center

cradlewise.com/faq

E-mail

support@cradlewise.com

Call or text

1-888-717-CRDL (Toll free-USA only)

In-app chat

24x7 live chat support on Cradlewise App

Cradlewise®, Inc.
479 Jessie St.
San Francisco, CA 94103

For support please visit: www.cradlewise.com
or e-mail us at: support@cradlewise.com
Call or text us at: 1-888-717-CRDL (Toll free number)

All rights reserved ©2022 Cradlewise®, Inc.