TELESIN

For DJI OSMO ACTION 6

# Remote Control Street Photography Kit (for Action6)

# 遥控街拍套装

USER MANUAL/用户手册

# Contents
# 目录

中文 ---------- 1
EN ---------- 7

# 产品硬件介绍

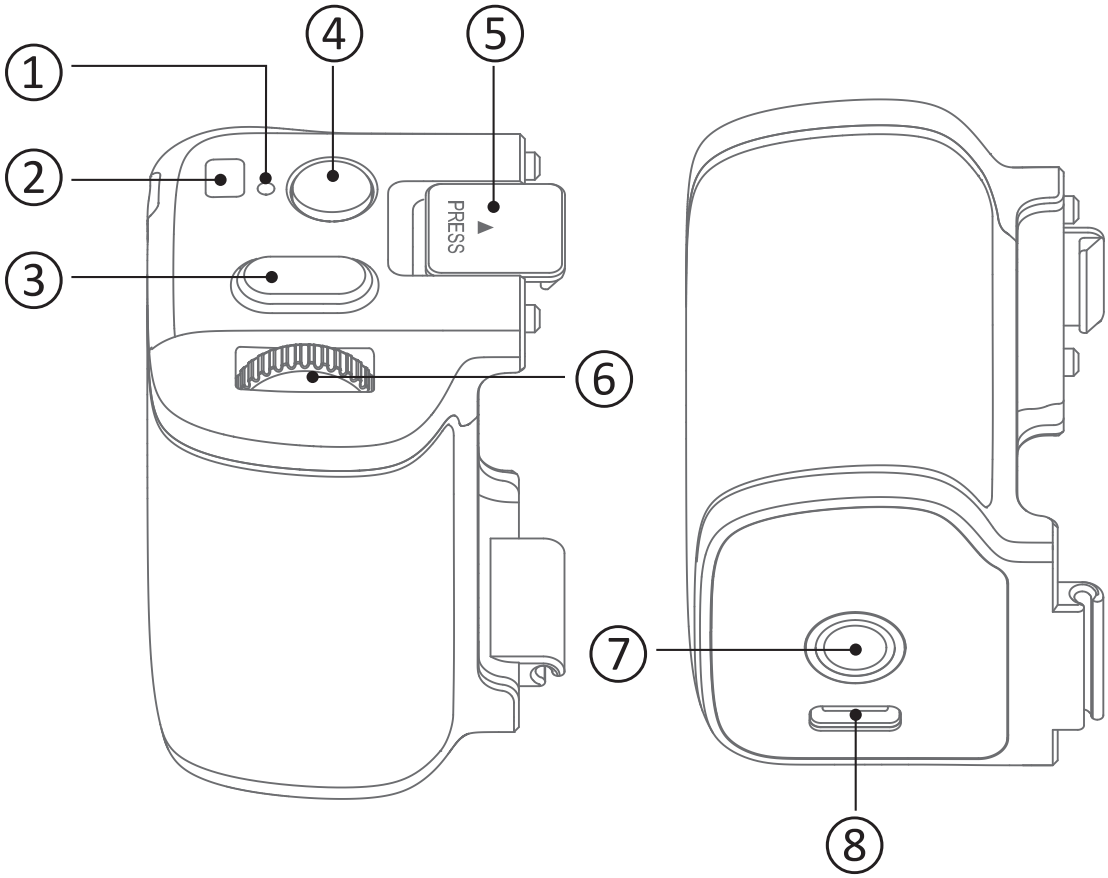


① 状态指示灯

② 挂绳孔

③ 拍照/录像键

④ 开/关机键

⑤ 开合按键

⑥ 模式切换波轮

⑦ 1/4螺纹接口

⑧ Type-C充电接口

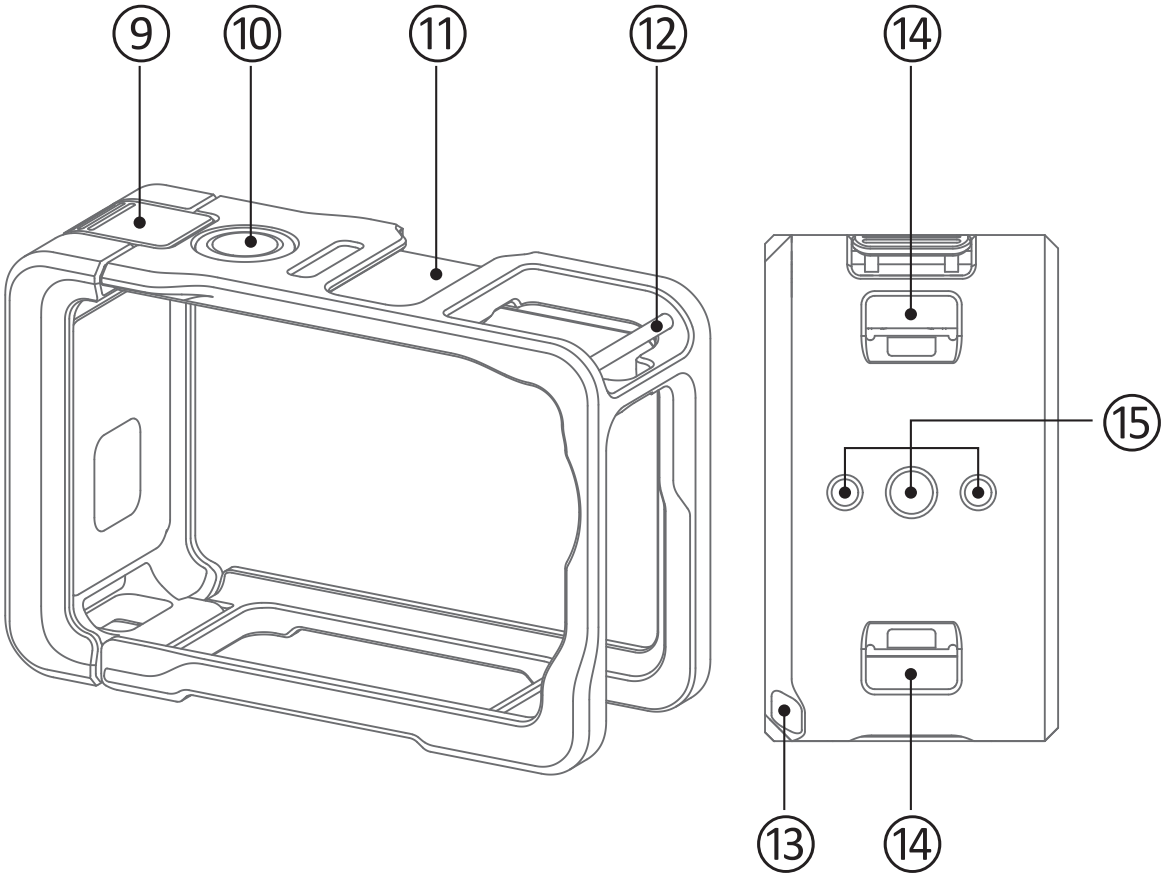


⑨ 侧盖开合按键

⑩ 金属开关按键

⑪ 冷靴接口

⑫ 挂绳杆

⑬ 挂绳孔

⑭ For Action6快拆口

⑮ 1/4螺纹接口
(含2个阿莱定位孔)

# 街拍套装安装步骤

1.先将运动相机装入兔笼左仓

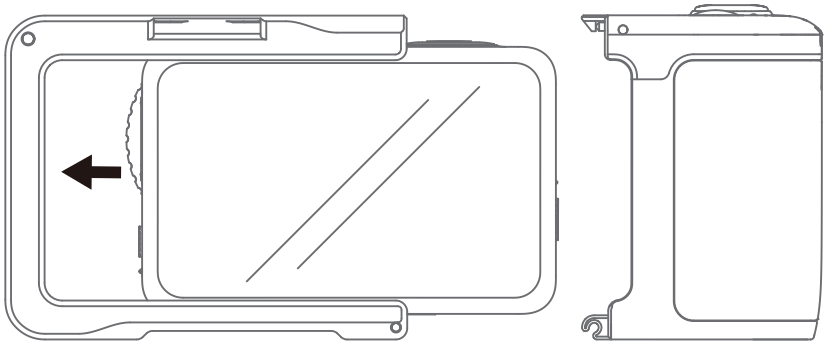

2.再将街拍手柄与兔笼左仓底部连接

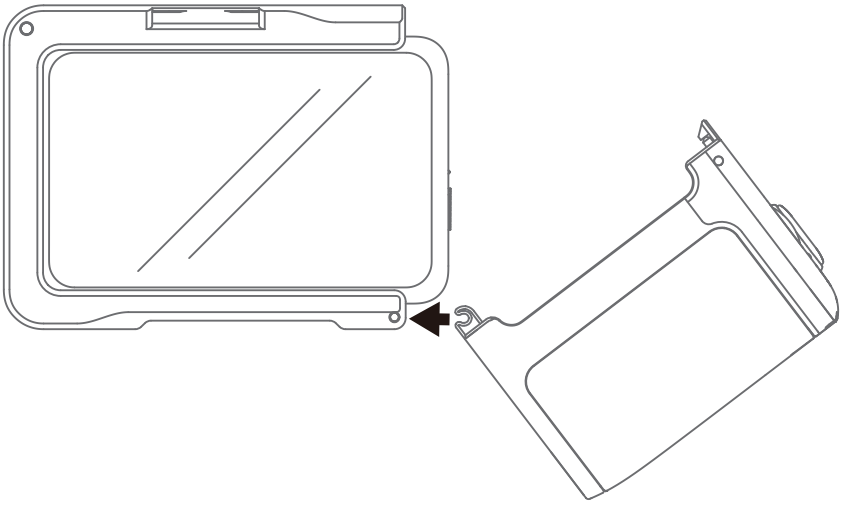

3.向左合上街拍手柄即可完成安装

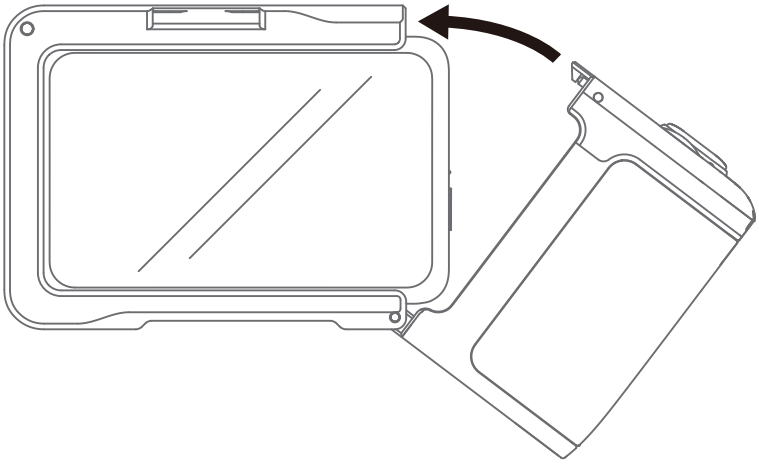

# 蓝牙街拍手柄使用教程

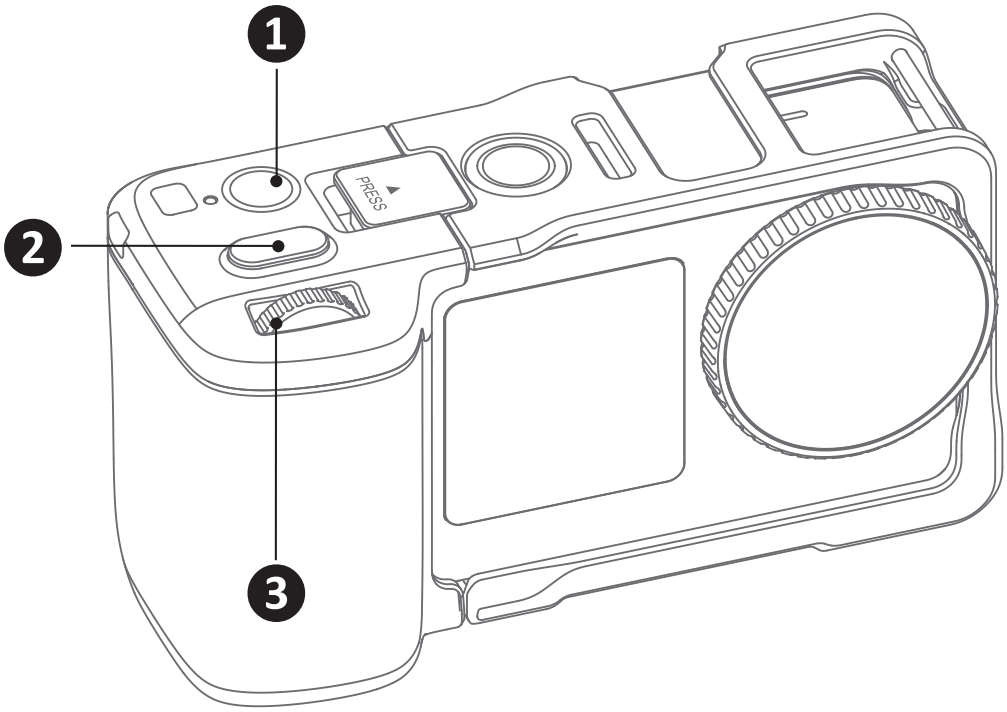


1. 长按2秒开机，开机后进入蓝牙搜索状态，蓝灯闪烁，与Action6连接后蓝灯常亮
2. 单击可拍照/录像
3. 左右滚动波轮可进行模式切换；按压波轮可拍照/录像

# 兔笼安装步骤

1.先将运动相机装入兔笼左仓

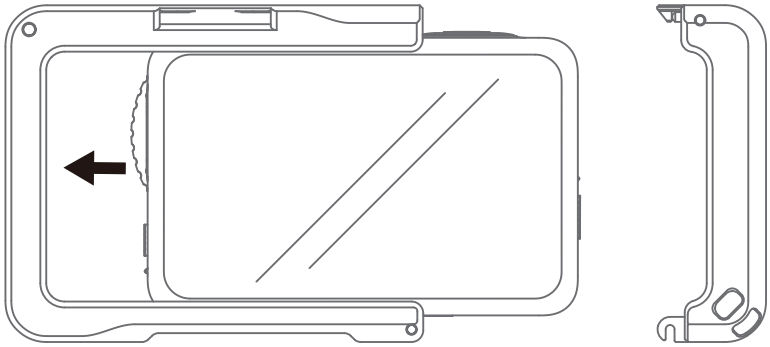

2.再将兔笼侧盖与兔笼左仓底部连接

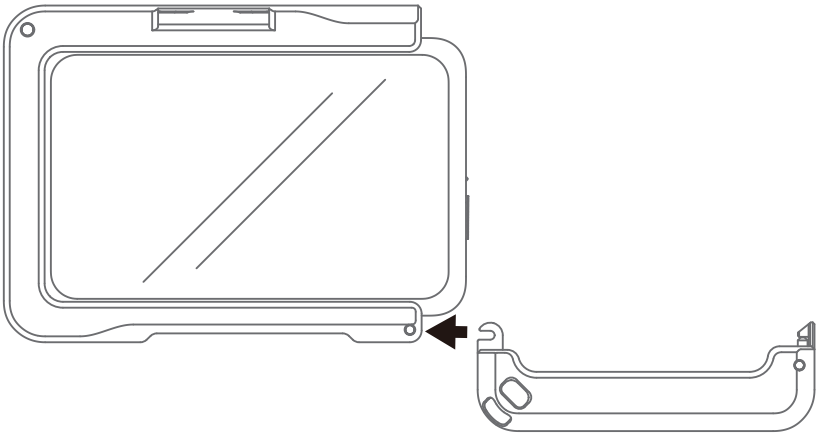

3.向左合上兔笼侧盖即可完成安装

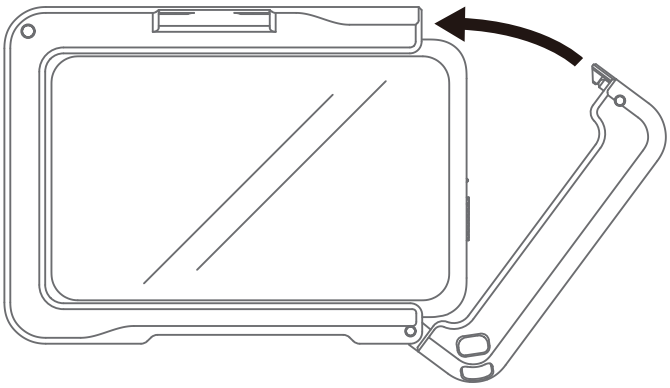

# 产品清单

| 名称 | 配置 | 图示 | 数量 | 规格说明 |
|---|---|---|---|---|
| 金属兔笼 | 标配 | 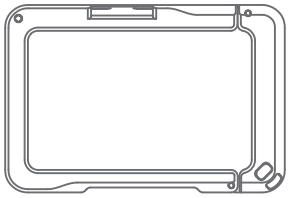 | 1 | 适配 DJI OSMO ACTION 6机型 |
| 塑料手柄 | 标配 | 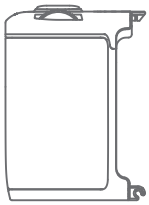 | 1 | / |
| 手腕绳 | 标配 | 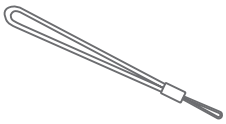 | 1 | 装上后可尽量避免街拍套装意外掉落 |
| 硅胶镜头盖 | 标配 | 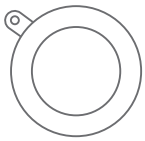 | 1 | 保护ACTION6镜头 |

## 免责声明

请仔细阅读本声明，一旦使用本产品，即视为对本声明的全部认可和接受。每次使用前，请仔细检查产品，若出现破损、变形,请勿使用。使用本产品，就意味着您认可并同意，您将对使用本产品的行为和可能产生的后果负全部责任。您承诺仅会出于正当合法的目的使用本产品。您理解并同意，对于直接或间接因使用本产品而造成的滥用、不利影响、损害、伤害、惩罚或者其他法律后果，泰迅数码有限公司（以下简称“Telesin”）将不承担任何责任。用户应遵循包括但不限于本文提及的使用注意事项。在国家法律法规范围内，本承诺解释权、修改权归Telesin所有。泰迅保修期从您收到货物后的当日起计算，享有6个月保修服务。

# 产品硬件介绍

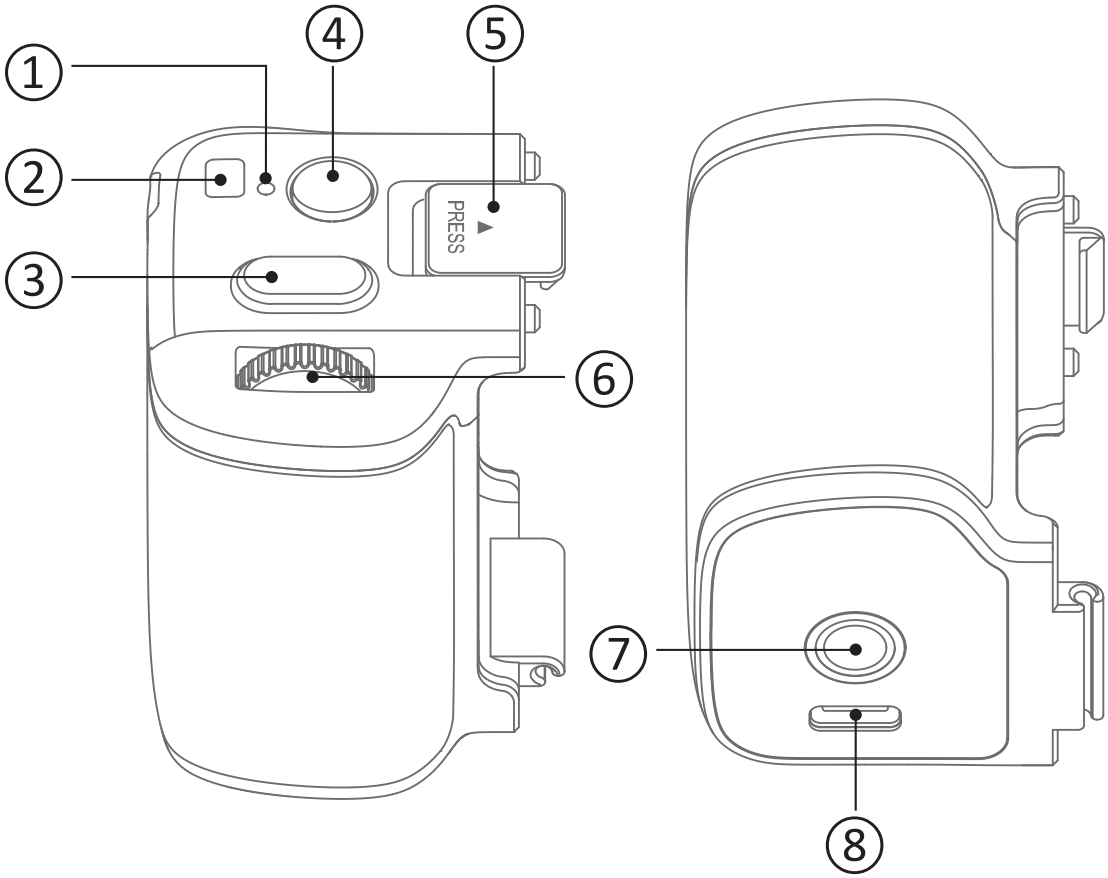


① Status Indicator Light
② Lanyard Hole
③ Photo/Record Button
④ Power On/Off Button
⑤ Opening & Closing Button
⑥ Mode Toggle Dial
⑦ 1/4" Threaded Mount
⑧ Type-C Charging Port

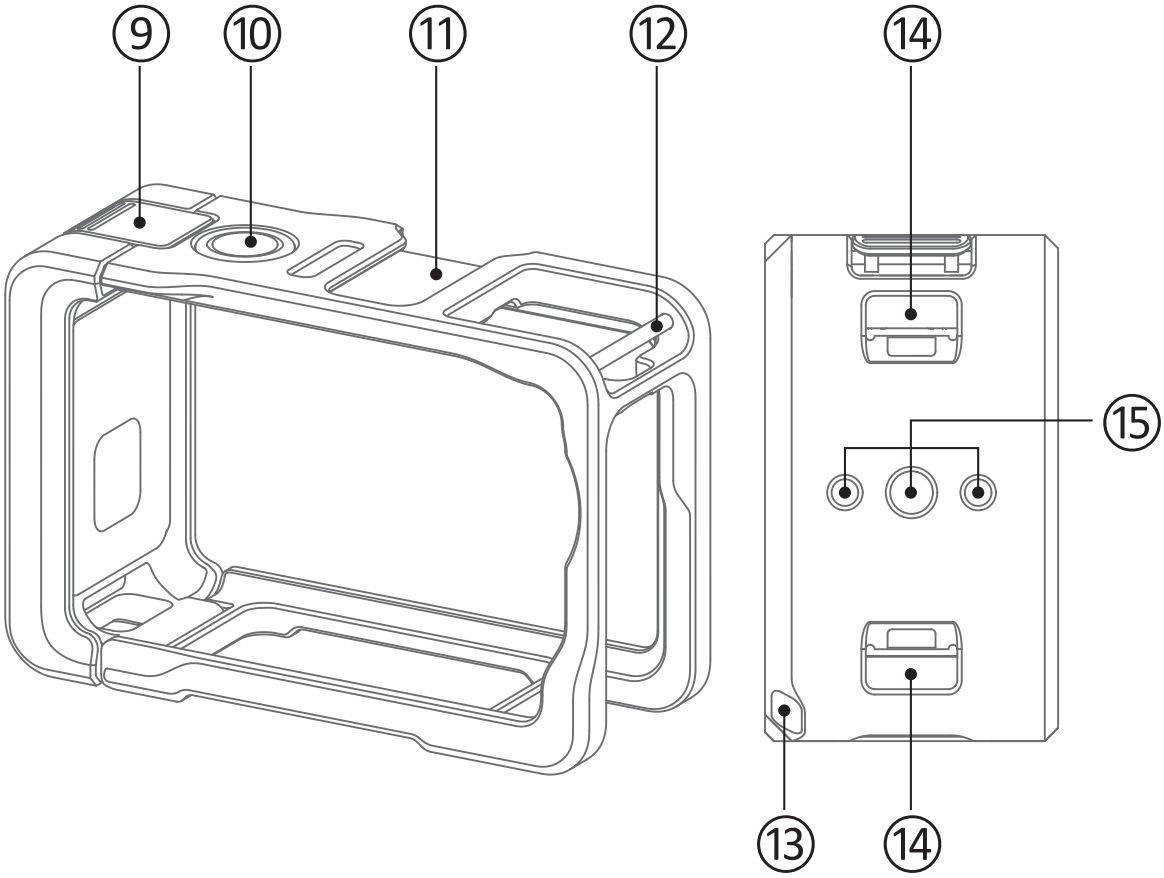


⑨ Side Cover Latch Button

⑩ Metal Switch Button

⑪ Cold Shoe Mount

⑫ Lanyard Bar

⑬ anyard Hole

⑭ Quick Release Cutout for Action6

⑮ 1/4" Threaded Interface
(with 2 positioning holes for Arca plate)

# Street Shooting Kit Installation Steps

1.Insert the action camera into the left compartment of the cage.

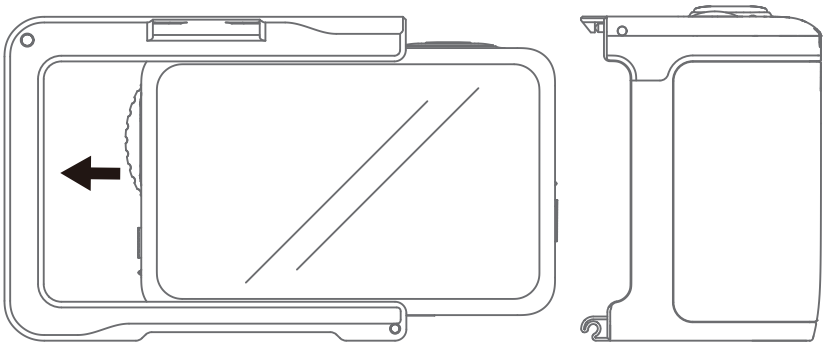

2.Connect the street shooting grip to the bottom of the cage's left compartment.

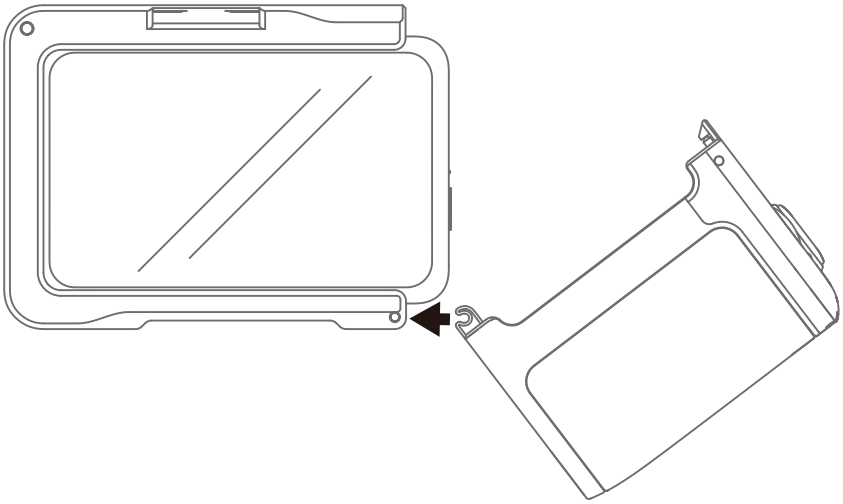

3.Slide the street shooting grip leftward to complete installation.

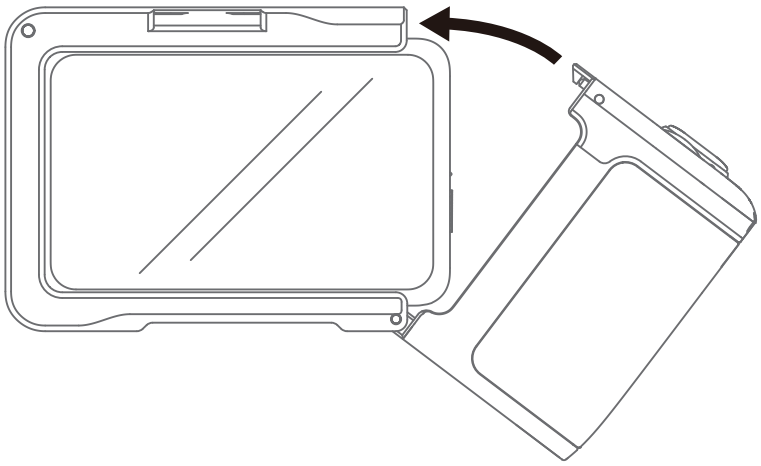

# Bluetooth Street Shooting Grip Operation Guide

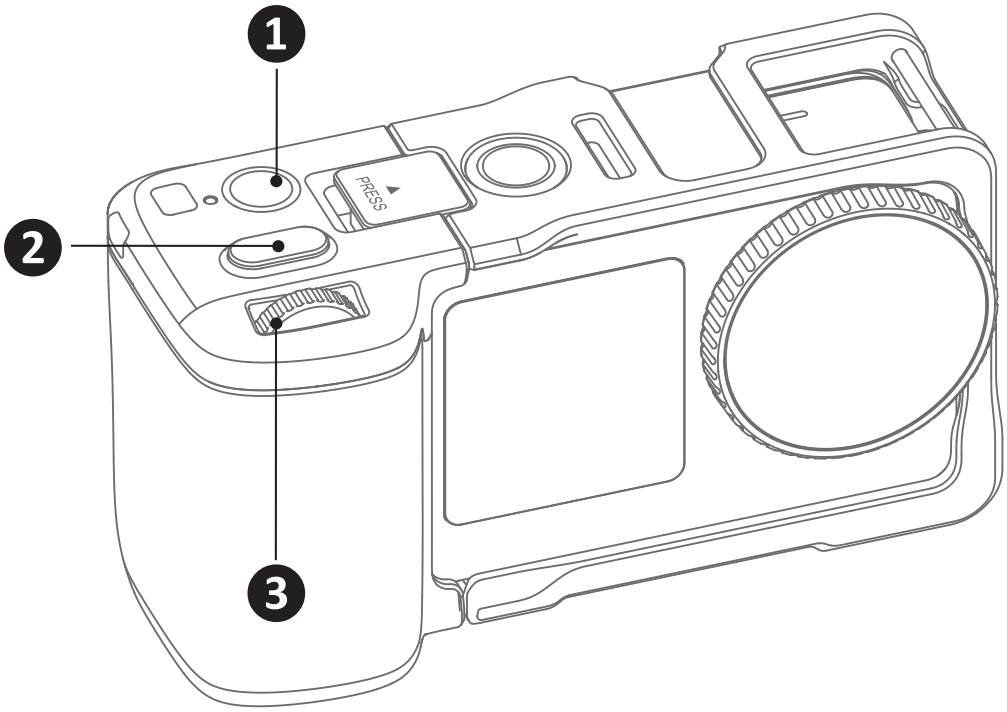


1. Press and hold for 2 seconds to power on; the unit enters Bluetooth pairing mode with blue light flashing. The blue light stays solid after successful connection with Action6.

2. Single press to take photos / start recording.

3. Scroll the dial left/right to switch shooting modes; press down the dial to take photos / start recording.

# Cage Installation Steps

1.Insert the action camera into the left compartment of the cage.

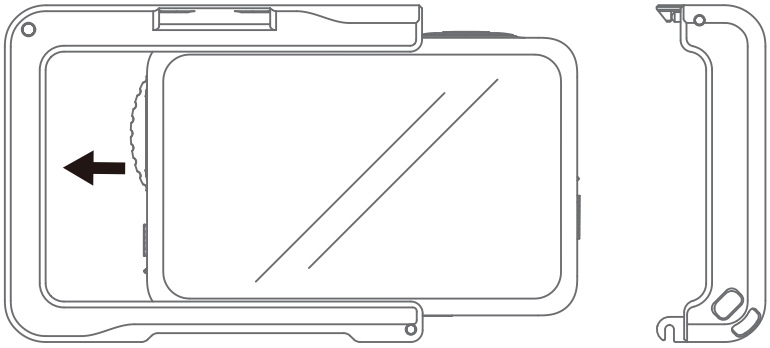

2.Attach the cage side cover to the bottom of the cage's left compartment.

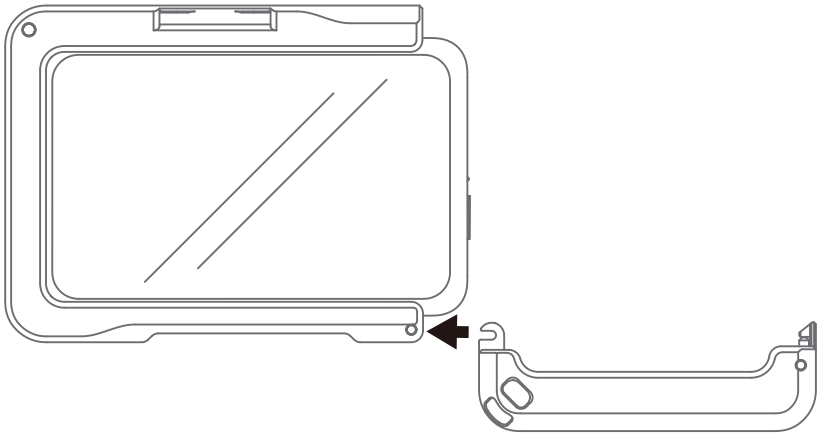

3.Slide the cage side cover leftward to lock and finish installation.

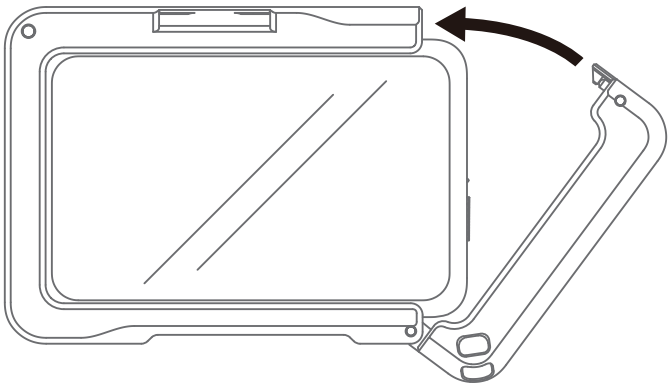

# Product Packing List

| Name | Config. | Fig. | Qty. | Spec. |
|---|---|---|---|---|
| Metal Camera Cage | Std. Acc. | 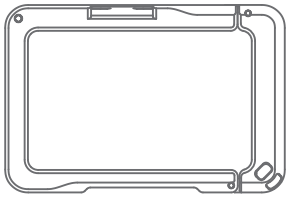 | 1 | Custom frame for DJI OSMO ACTION 6 |
| Plastic Grip | Std. Acc. | 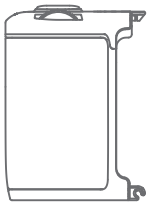 | 1 | / |
| Wrist Strap | Std. Acc. | 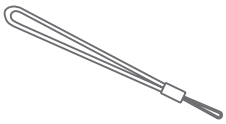 | 1 | Anti-drop wrist lanyard for street shooting kit |
| Silicone Lens Cap | Std. Acc. | 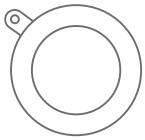 | 1 | Protect ACTION6 Lens |

FCC Caution
15.19 Labelling requirements.
This device complies with part 15 of the
FCC Rules. Operation is subject to the following two conditions: (1) This device may not cause harmful interference, and (2) this device must accept any interference received, including interference that may cause undesired operation.
15.21 Information to user.
Any changes or modifications not expressly approved by the partyresponsible for compliance could void the user's authority to operate the equipment.
15.105 Information to the user.
Note: This equipment has been tested and found to comply with the

limitsfor a Class B digital device, pursuant to part 15 of the FCC Rules. These limits are designed to provide reasonable protection against harmful interference in a residential installation. This equipment generates uses and can radiate radio frequency energy and, if not installed and used in accordance with the instructions, may cause harmful interference to radio communications. However, there is no guarantee that interference will not occur in a particular installation. If this equipment does cause harnnful interference to radio or television reception, which can be determined by turning the equipment off and on, the user is encouraged to try to correct the interference by one or more of the following measures:

-Reorient or relocate the receiving antenna.

-Increase the separation between the equipment and receiver.

-Connect the equipment into an outlet on a circuit different from that to which the receiver is
connected.

-Consult the dealer or an experienced radio/TV technician for help.

The device has been evaluated to meet general RF exposure requirement. The device can be used in portable exposure condition without restriction.

IC Statement

-English:

This device contains licence-exempt transmitter(s)/receiver(s) that comply with Innovation, Science and Economic Development Canada's licence-exempt RSS(s). Operation is subject to the following two conditions:

(1) This device may not cause interference.

(2) This device must accept any interference, including interference that may cause undesired operation of the device.

Any changes or modifications not expressly approved by the party responsible for compliance could void the user's authority to operate the equipment.

RF exposure statement:

The device was evaluated to meet general RF exposure requirements. The device can be used in portable exposure condition without

restriction.
– French:
Cet appareil contient des émetteurs / récepteurs exemptés de licence conformes aux RSS (RSS) d'Innovation, Sciences et Développement économique Canada. Le fonctionnement est soumis aux deux conditions suivantes:
(1) Cet appareil ne doit pas causer d'interférences.
(2) Cet appareil doit accepter toutes les interférences, y compris celles susceptibles de provoquer un fonctionnement indésirable de l'appareil.
Tout changement ou modification non expressément approuvé par la partie responsable de la conformité pourrait annuler l'autorité de l'utilisateur à utiliser l'équipement.
Déclaration d'exposition RF:
L'appareil a été évalué pour répondre aux exigences générales en matière d'exposition aux RF. L'appareil peut être utilisé en condition d'exposition portable sans restriction.

## Disclaimer

Please read this disclaimer carefully. By using this product, you acknowledge full acceptance of all terms herein. Inspect the product for damage or deformation before each use. Using the product signifies your agreement that you bear full legal liability for all conduct and consequences arising from product use. You fully understand and agree that the manufacturer shall not be held liable for any adverse outcomes, damage or losses caused by improper use or misuse of this product. Users shall abide by all applicable laws and the usage guidelines stated herein. Within the scope of relevant national laws, we reserve the right to interpret, revise and adjust all terms of this warranty policy. The warranty period commences on the date you receive the goods and covers 6 months of customer service support.

【EN】Hereby, [Shenzhen Telesin Digital Co., Ltd.] declares that the radio equipment type [TSFMS50-01] is in compliance with Directive 2014/53/EU.The fulltext of the EU declaration of conformity is available at the following internet address: https://qr61.cn/oGcW-jf/qsB4JQh

【DE】Hiermit erklärt die [Shenzhen Telesin Digital Co., Ltd.], dass der Funkanlagentyp [TSFMS50-01] der Richtlinie 2014/53/EU entspricht. Der vollständige Text der EU-Konformitätserklärung ist unter der folgenden Internetadresse verfügbar:

https://qr61.cn/oGcWjf/qsB4JQh

【IT】Con la presente, [Shenzhen Telesin Digital Co., Ltd.] dichiara che il tipo di apparecchiatura radio [TSFMS50-01] è conforme alla direttiva 2014/53/UE. Il testo completo della dichiarazione di conformità UE è disponibile al seguente indirizzo Internet: https://qr61.cn/oGcWjf/qsB4JQh

【FR】Par la présente, [Shenzhen Telesin Digital Co., Ltd.] déclare que le type d'équipement radio [TSFMS50-01] est conforme à la directive 2014/53/UE. Le texte complet de la déclaration de conformité de l'UE est disponible à l'adresse Internet suivante : https://qr61.cn/oGcWjf/qsB4JQh

【ES】Por la presente, [Shenzhen Telesin Digital Co., Ltd.] declara que el tipo de equipo radioeléctrico [TSFMS50-01] cumple con la Directiva 2014/53/UE. El texto completo de la declaración de conformidad de la UE está disponible en la siguiente dirección de Internet: https://qr61.cn/oGcWjf/qsB4JQh

【DA】Hermed erklærer [Shenzhen Telesin Digital Co., Ltd.], at radioudstyrstypen [TSFMS50-01] er i overensstemmelse med direktiv 2014/53/EU. Hele teksten for EU-overensstemmelseserklæringen findes på følgende internetadresse: https://qr61.cn/oGcWjf/qsB4JQh

【SV】Härmed försäkrar [Shenzhen Telesin Digital Co., Ltd.] att radioutrustningstypen [TSFMS50-01] överensstämmer med direktiv 2014/53/EU. Hela texten till EU-försäkran om överensstämmelse finns på följande webbadress: https://qr61.cn/oGcWjf/qsB4JQh

【CS】Společnost [Shenzhen Telesin Digital Co., Ltd.] tímto prohlašuje, že typ rádiového zařízení [TSFMS50-01] je v souladu se směrnicí 2014/53/EU. Úplné znění prohlášení o shodě EU je k dispozici na následující internetové adrese: https://qr61.cn/oGcWjf/qsB4-JQh