Smart Door Lock

S110BBL-F

FOR CUSTOMER SERVICE PLEASE CALL: (800)-315-9607

WWW.ELEMAKELOCKS.COM

Elemake keeps on working hard to provide customers top-grade quality hardware at affordable price. Gracing customers' doors with stylish designs and excellent craftsmanship since 1976, Elemake is always dedicated to making your life more safe and stylish.

Series-ITD locks are a family of touch screen and fingerprint internet deadbolts. They are ideal for residential homes, apartment buildings, offices, schools, hospitals, and other applications where restricted access to an area is needed.
All of ELEMAKE ITD series keyless deadbolt products come with a 5 years' warranty.

NOTE TO INSTALLER

Watching the videos are highly recommended, the video will help the customer to understand the installation and functions more easily.

Installation Video Linkage:

Functions Instruction Video Linkage:

FAILURE TO FOLLOW THESE INSTRUCTIONS COULD RESULT IN DAMAGE TO THE PRODUCT AND VOID THE FACTORY WARRANTY

For Technical Assistance call Elemake at
1 (800)315-9607

QUICK SOLUTIONS TO COMMON PROBLEMS:

Item #	Problem	Cause	Solution
1	The outside escutcheon doesn't fit, the spindle cannot go through the bolt's hole.	The bolt is upside down	Turn the bolt upside down--please see the "up" mark on the bolt
2	The thumb turn cannot work, cannot retract or extrude.	The bolt is not retracted when install the outside escutcheon	Install the outside escutcheon again, make sure the bolt is retracted in installation
3	The latch cannot be fully retracted or extruded, or latch movement is not smooth.	The cable is not positioned under the bolt and is not through the slot on right side of the mounting bracket, The cable blocked the movement of the latch	Route the cable under the bolt and make sure the cable go through the right side slot on the mounting bracket.
4	Cannot retract or extrude the latch	The thumb turn was positioned in incorrect direction in inside escutcheon installation.	Take off the inside escutcheon, turn the thumb turn position according to the right handed or left handed door.
5	Cannot retract or extrude the latch	Incorrectly set the motor rotation direction	For left handed door, should set the thumb turn in vertical position, for the right handed door, should set the thumb turn in horizontal position

Initial Password:

123456

TABLE OF CONTENT

1. Warnings.....2
2. Reset Lock To Factory Default.....3
3. Introduction.....4
3.1 Installation
(1) Step 1----Define the right-handed or left-handed door.....5
(2) Step 2----Components and Tools.....5
(3) Step 3----Prepare Deadbolt for Installation.....6
(4) Step 4 ---Install Deadbolt and door position sensor 7-8
4. Setting up.....4
4.1 Steps to setup 4
4.2 Add members 4
4.3 Connect to Wifi 4

5. How to use the Elemake touchscreen deadbolt
3.2.1 Basic Functions(Local Operation) 9-10
3.2.2 Internet Functions.....11-13
5. Trouble shooting.....4

6. Quality Policy.....20

1. WARNINGS

FCC: Class B Equipment

Series ITD series deadbolt has been tested and found to comply with the limits for a Class B digital device---Part 15 of the FCC Rules. These limits are purposed to provide protection against harmful interference in a residential environment. The deadbolt generates, uses, and can radiate RF energy and, if not installed and used as the instructions on users' manual, may have harmful interference to radio communications. However, If this deadbolt does cause harmful Interference to radio or television reception, which can be determined by turning the deadbolt off and on, the user is encouraged to try to correct the interference by one or more of the following measures:

- Relocate the radio communication devices' receiving antenna.
- Make separation between the deadbolt and receiver.
- Consult the customer service or professional radio/ technician for help.

2. RESET DEADBOLT TO FACTORY DEFAULT

The following procedure clears all the setting of the deadbolt, and returns the deadbolt to default – deleting all user password/fingerprint/card.

2.1 RESET METHOD 1(see Figure A-1 to Figure A-4)

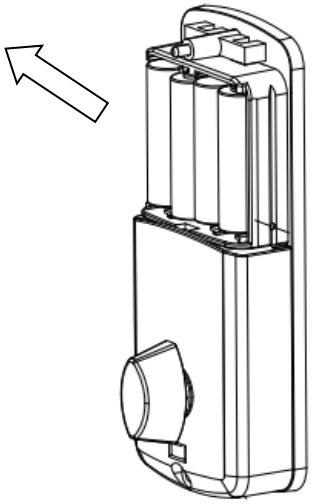

Remove the batteries and wait for 20 seconds,

Figure A-1

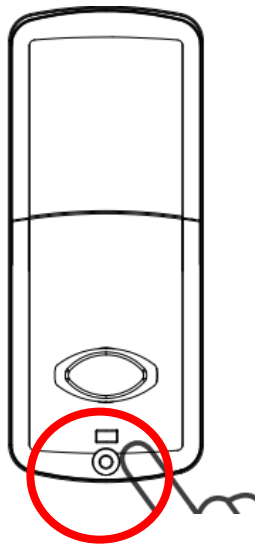

Hold down the reset button at the bottom of the inside escutcheon

Figure A-2

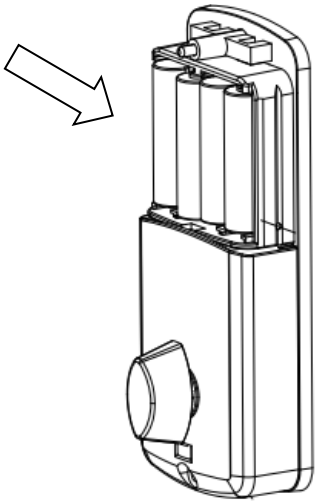

Install the batteries into the inside escutcheon

Figure A-3

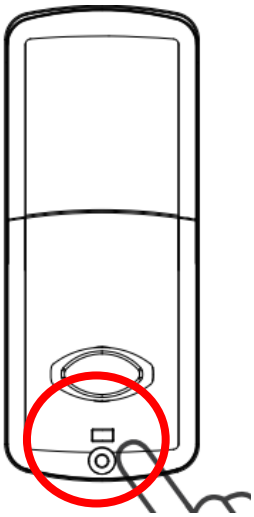

Hold down the reset button 10-30s till voice says “reset success”

Figure A-4

2.2 RESET METHOD 2(see Figure B-1)

This method is only for the family member who already get the password/fingerprint enrolled(Please must keep the door opened when doing the reset)

Touch the screen with the back of hand to activate the deadbolt,and input 888,
The voice will remind family member to input the enrolled password or touch the fingerprint for validation.

After validation, the deadbolt will be reset till the voice says ”Reset success”

Figure B-1

3. INSTALLATION

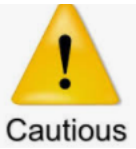

IMPORTANT THINGS INSTALLER NEED TO KNOW PRIOR TO INSTALLATION

a. **Initial password "123456"**

b. **Bolt Direction**

Please make sure the bolt is installed in correct direction according to "up" mark on the bolt. (see **Figure C1**)

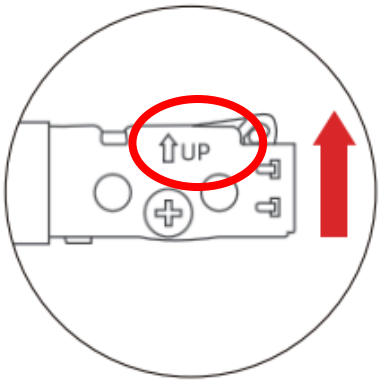

Figure C-1

c. The bolt **must be in a retracted (unlocked) position** when installing the lockset. (see **Figure C2**)

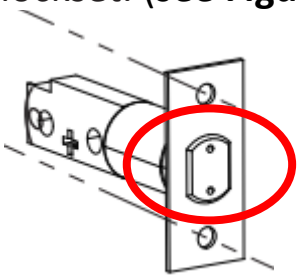

Figure C-2

d. The cable from the outside escutcheon should **go under the bolt**, (see Figure C-3) and should go through the slot at the **right side of the mounting bracket.** (see **Figure C-4**)

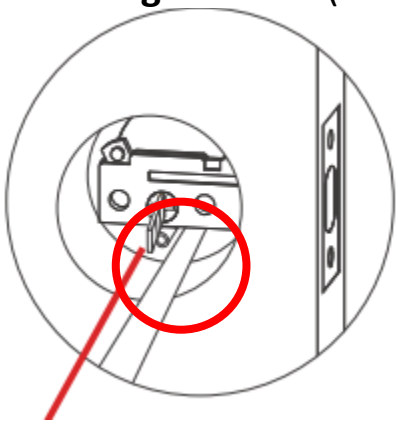

Figure C-3

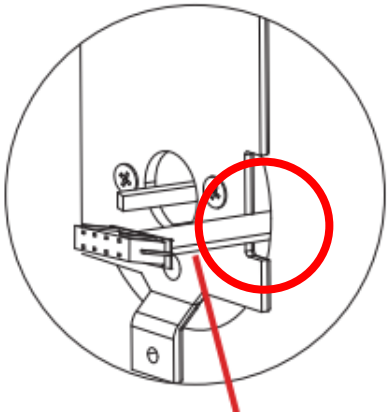

Figure C-4

e. **Thumb turn on inside escutcheon need to be turned to different position for right handed door or left handed door in inside escutcheon installation.** (see **Figure C-5**)

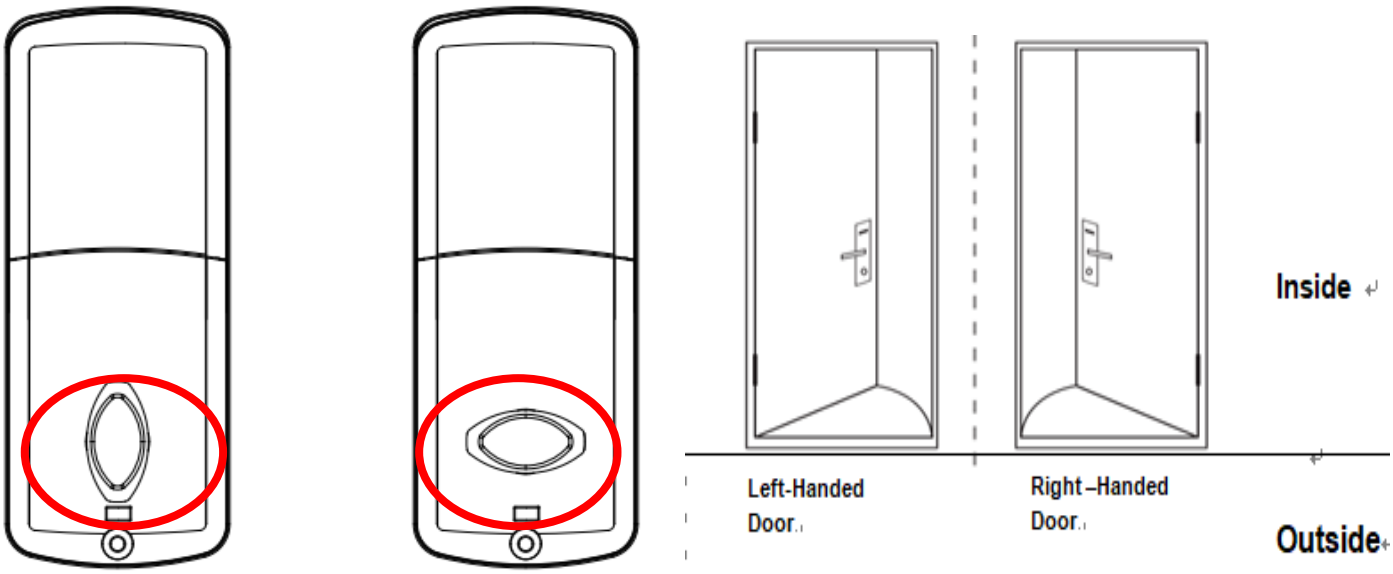

Vertical Position For Right Handed Door

Horizontal Position For Right Handed Door

Figure C-5

f. **Before installing the batteries, test the mechanical operation of the lock by using**
Both thumb turn and the key. The movement of the bolt should be smooth and unobstructed. If operation is not smooth, review the previous steps to ensure proper installation. (see **Figure C-6**)

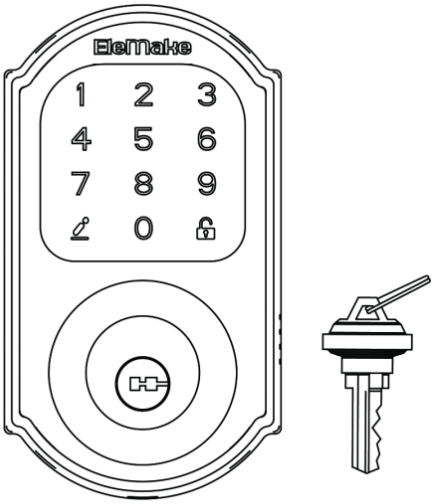

Figure C-6

g. **After the installation, connect the deadbolt to Smartlife APP, choose the correct setting for door direction(setting>motor rotation direction>clockwise unlock/counterclockwise unlock)** (see **Figure C-7**)

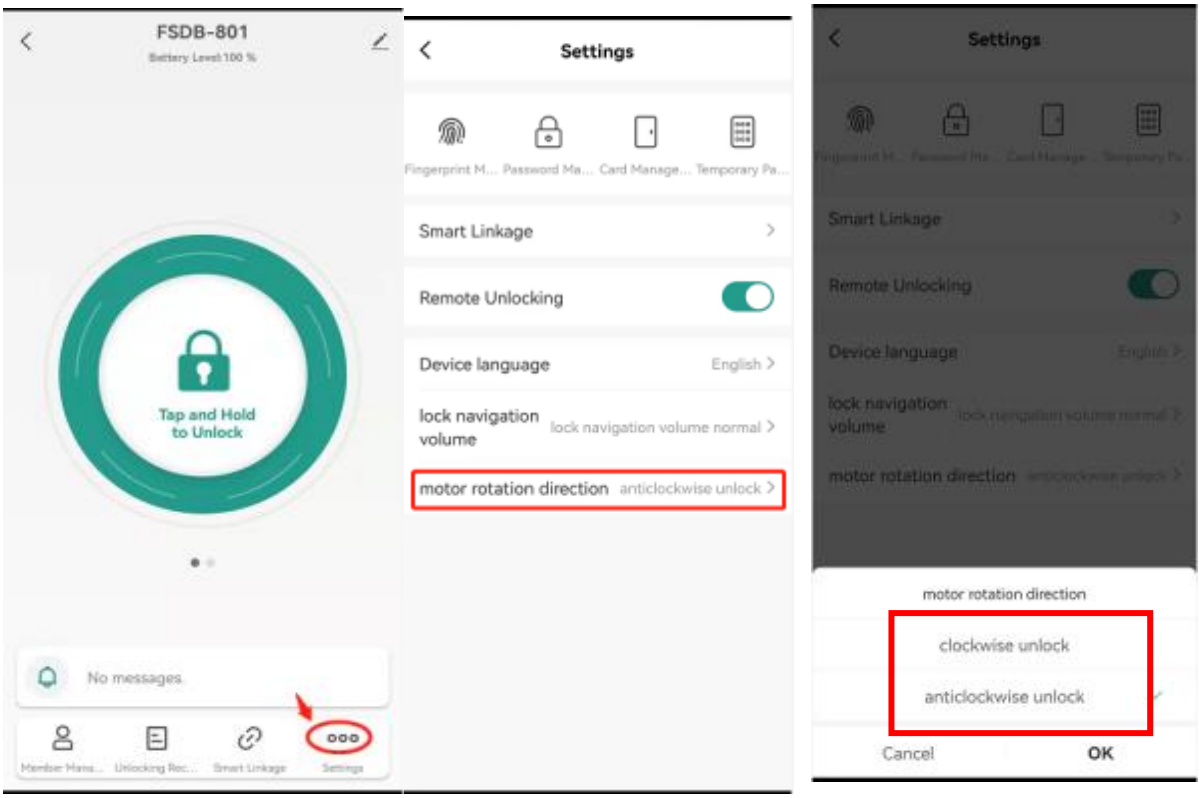

Figure C-7

Choose COUNTERCLOCKWISE for RIGHT HANDED DOOR
Choose CLOCKWISE for LEFT HANDED DOOR

h. Assembly drawing(See Figure C-8)

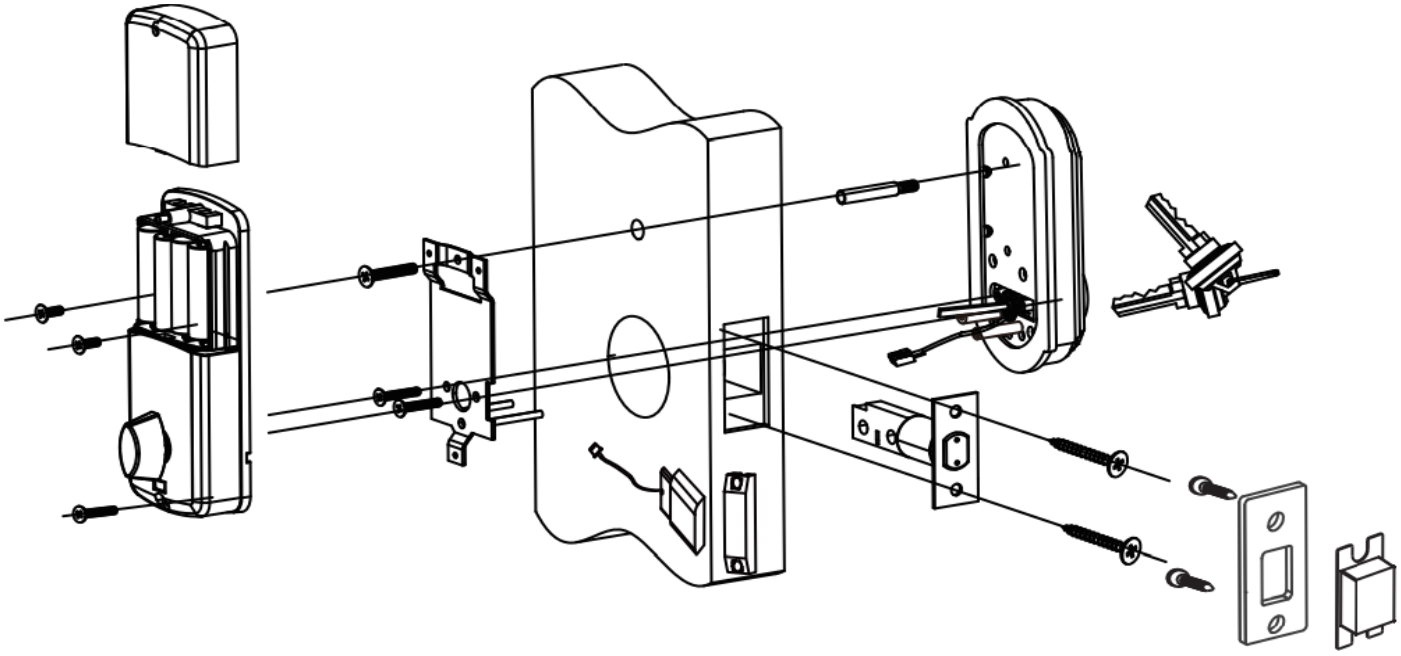

Figure C-8

3.1 STEP 1----DEFINE THE RIGHT HANDED OR LEFT HANDED DOOR.

To Ensure Proper Lock Handing and for an explanation of how to determine your lock handing, please read this important note. (see **Figure D-1**)

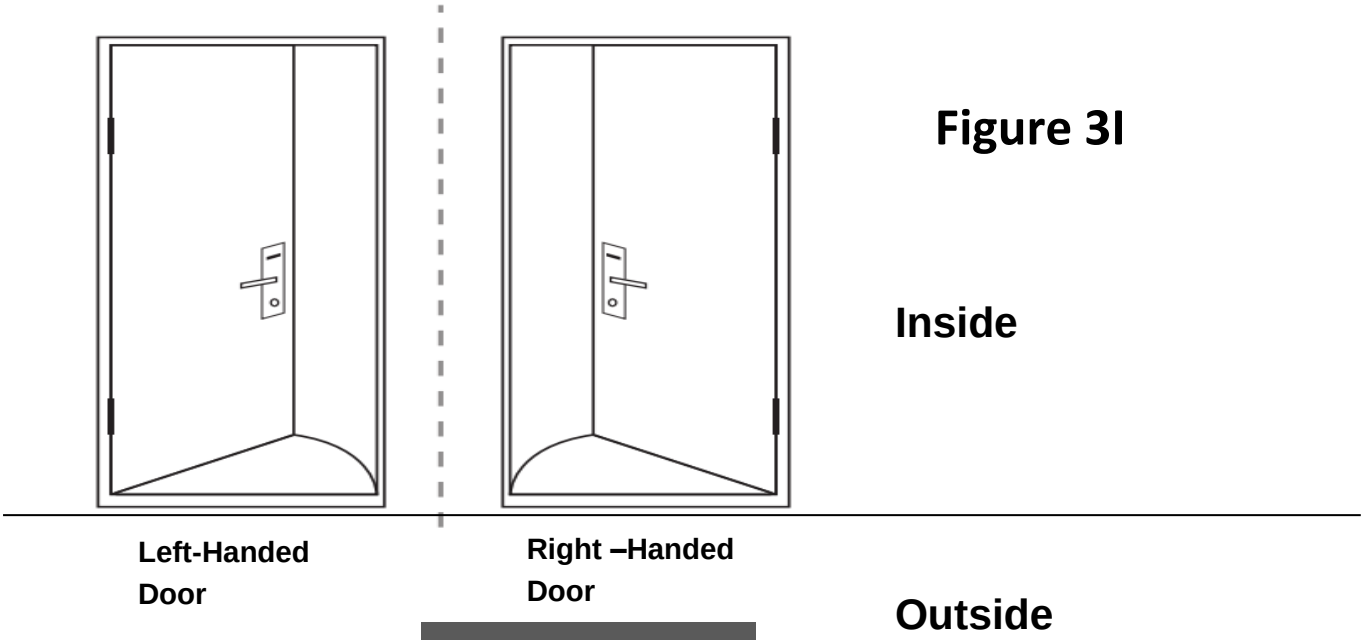

Figure D-1

3.2 STEP 2----COMPONENTS AND TOOLS

(1) Components Included in the box(see **Figure E-1**)----

User's manual
Outside Escutcheon Bolt
Strike Plate
Screw Pack (see below)
Keys
Door Position Sensor(For automatic relocking--optional)

PARTS ILLUSTRATIONS

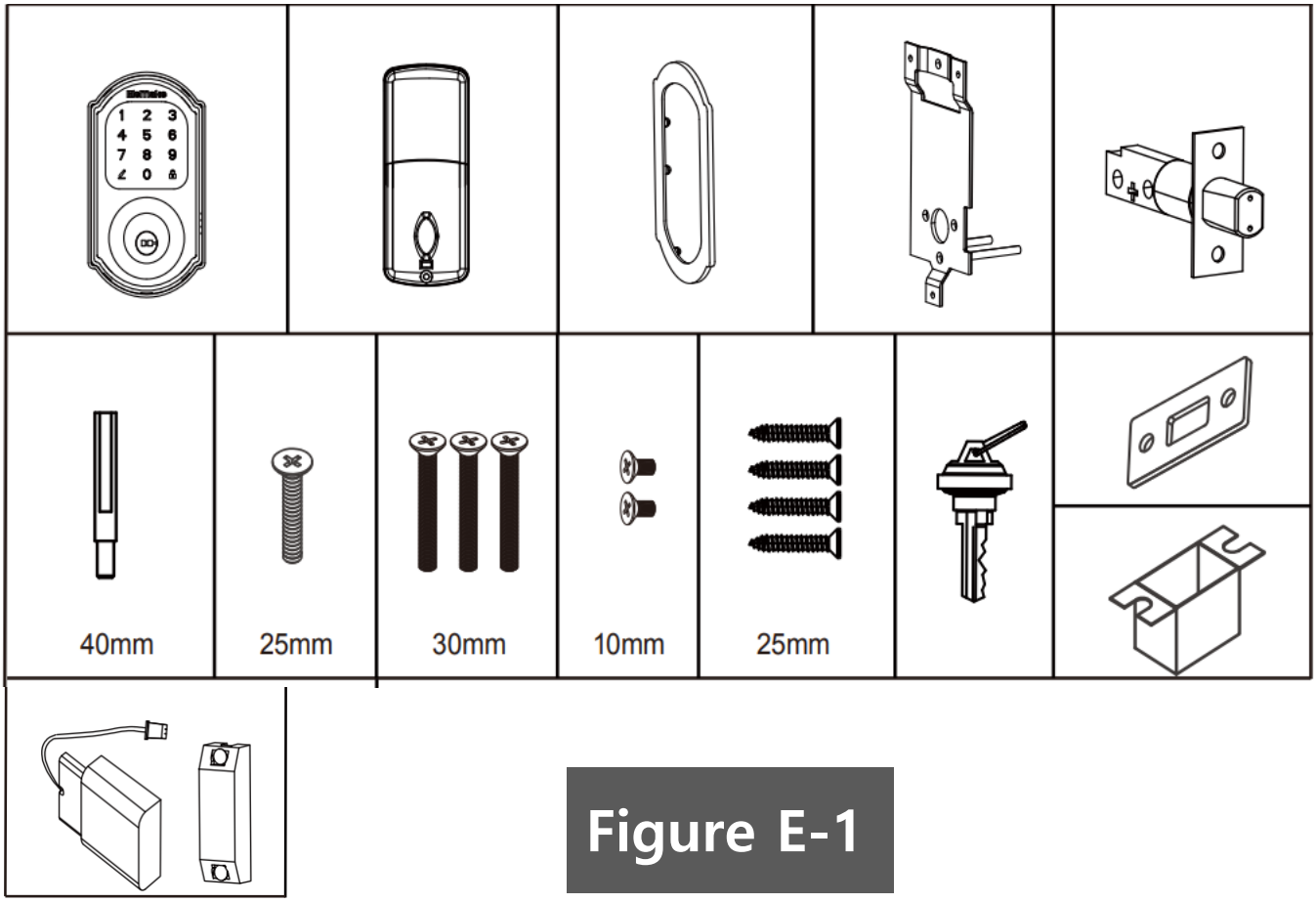

Figure E-1

(2) Tools Needed

2-1/8" (54mm) hole saw
1" (26mm) boring bit
Wood screw drill bit
Chisel & hammer

3.3 STEP 3----PREPARE DEADBOLT FOR INSTALLATION

(1) Inside Escutcheon and back cover(see Figure F-1)

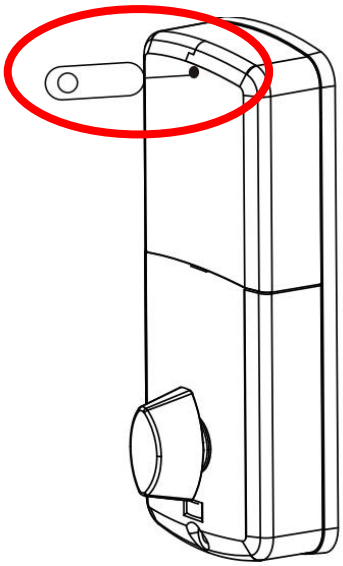

Use a pin to press down the button to slide up the battery cover to take off the batteries

Figure F-1

(2) Mount Plate(See Figure F-2)

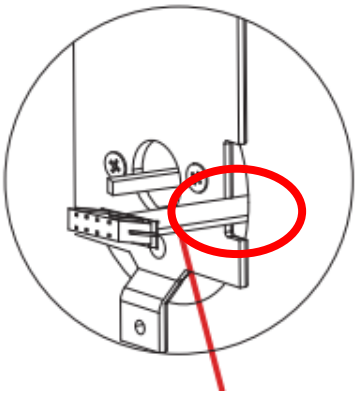

This circled position is the wire slot which will allow the cable from the outside escutcheon to go through in installation

Figure F-2

(3)Bolt(See Figure F-3)

Bolt can be adjusted to either 2-3/8 or 2-3/4 by twist the head 180 degree as above, and

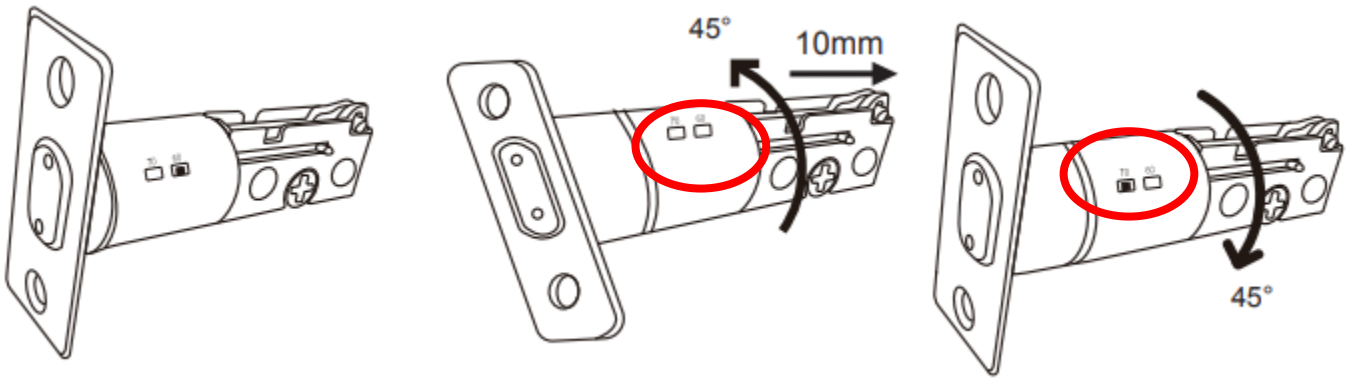

Press small black button on underside of bolt and pull to extend to 2-3/4" backset position.

Figure F-3

(4) Outside escutcheon

The outside escutcheon (with gasket) remains assembled(see **Figure F-4**).

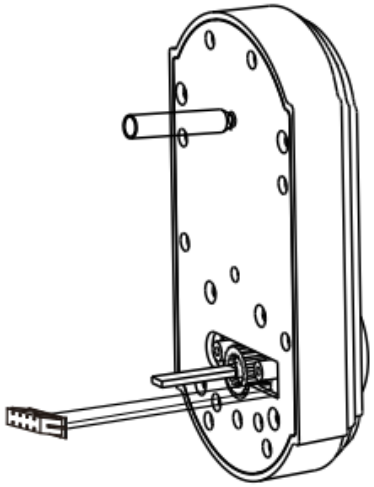

Figure F-4

3.4 STEP 4----INSTALL DEADBOLT & Door Position Sensor

(1) Install bolt in door.(see Figure G-4, Figure G-5, Figure G-6)

NOTE: THE BOLT MUST BE IN A RETRACTED (UNLOCKED) POSITION PRIOR TO INSTALLING THE LOCKSET.(see Figure G-5)

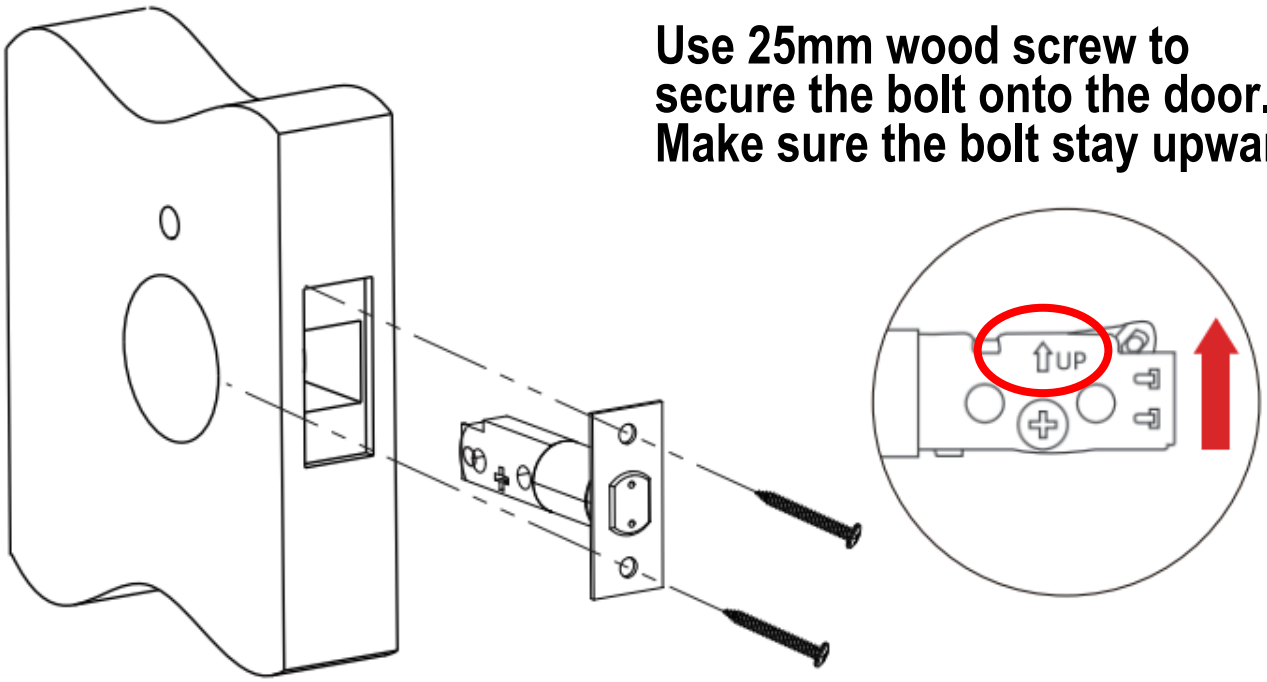

Figure G-4

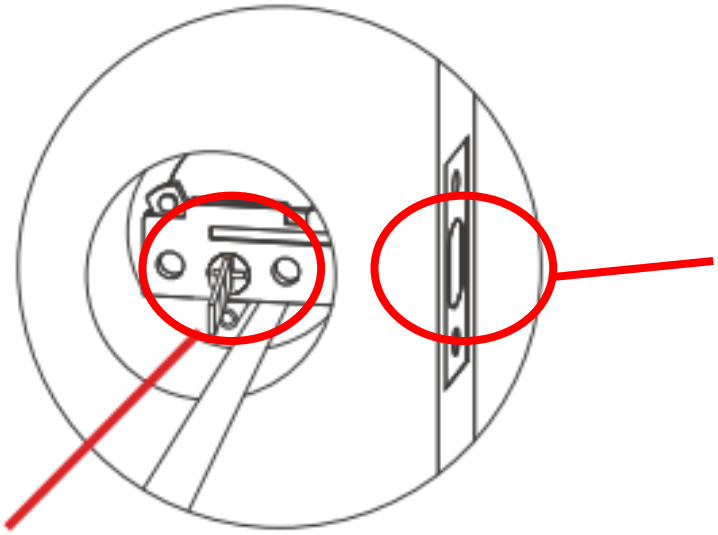

Figure G-5

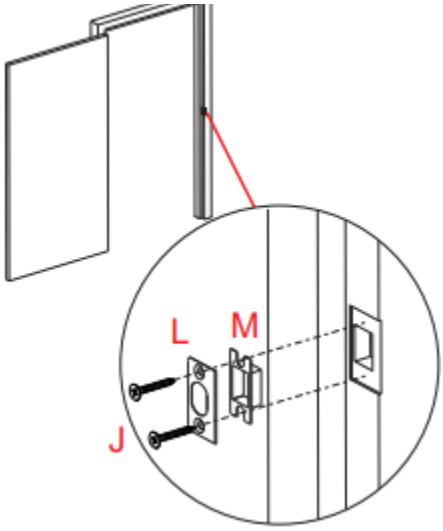

Install strike on the door frame, making sure to allow for the bolt to be centered in the strike.

Figure G-6

(2) Install outside escutcheon(see Figure H-1, Figure H-2, Figure H-3, Figure H-4)

NOTE: Cable goes UNDER the bolt（See Figure H-2）
Cable from outside escutcheon should go though the right side slot of the mount bracket（See Figure H-4）

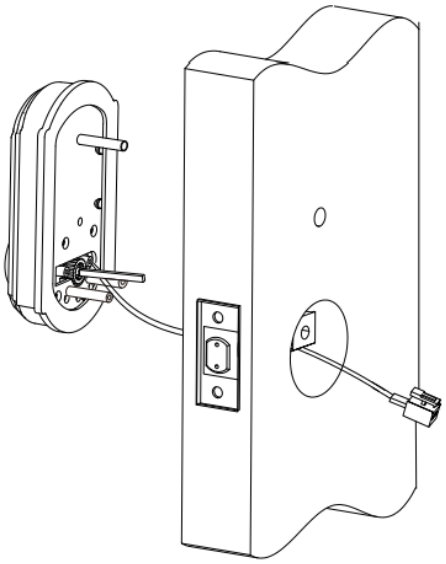

As you position the outside escutcheon, route the cable through 2-1/8" diameter hole(The cable must go under the bolt)

Figure H-1

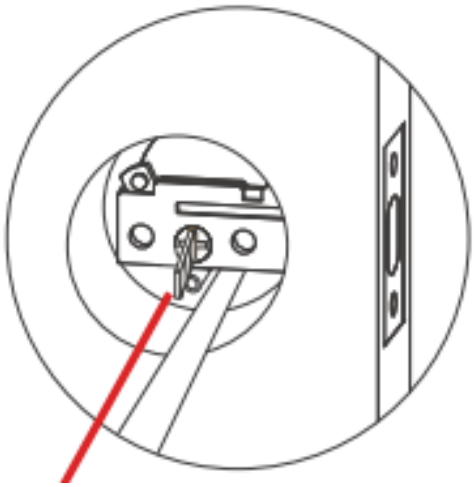

The cable need to go under the bolt in installation

Figure H-2

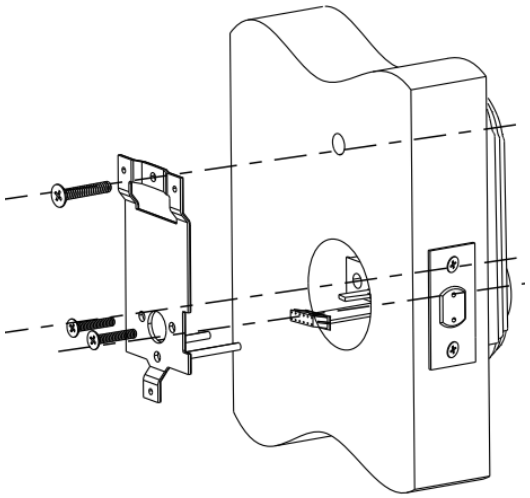

Holding the outside escutcheon flush to the door, position the inside mounting plate by first routing the cable and connector through the mounting plate's wire slot on the side

Insert the mounting plate “tongue” into the bottom slot of the outside escutcheon

Secure both assemblies using (2)40mm machine screws

Figure H-3

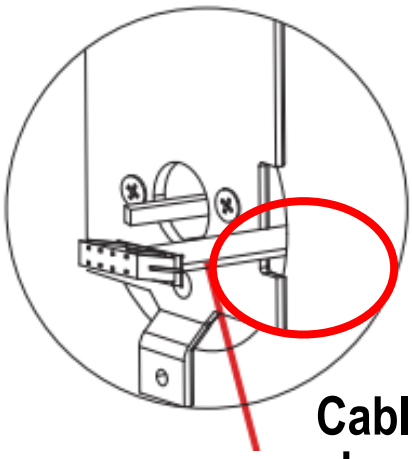

Figure H-4

Cable from outside escutcheon should go though the right side slot of the mount bracket

(3) Route cable(see **Figures I-1 and Figure I-2, Figure I-3).**

(a) Attach cable assembly to the inside escutcheon printed circuit board (PCB) by lining up notches on top of cable connector to slots on PCB connector (Figure 3K). Press connector in firmly using thumbs until completely seated (proper position indicated by arrows on PCB as in (see **Figures I-1 and Figure I-2, Figure I-3).**

(b) If need automatic relocking function, need to install the door position sensor（supplied in the box）, attach the sensor cable to the inside escutcheon printed circuit board (PCB), the cable route through the slot on the rubber gasket. (see **Figures I-1 and Figure I-2).**

Cable and connector for door position sensor （Optional for automatic relocking）

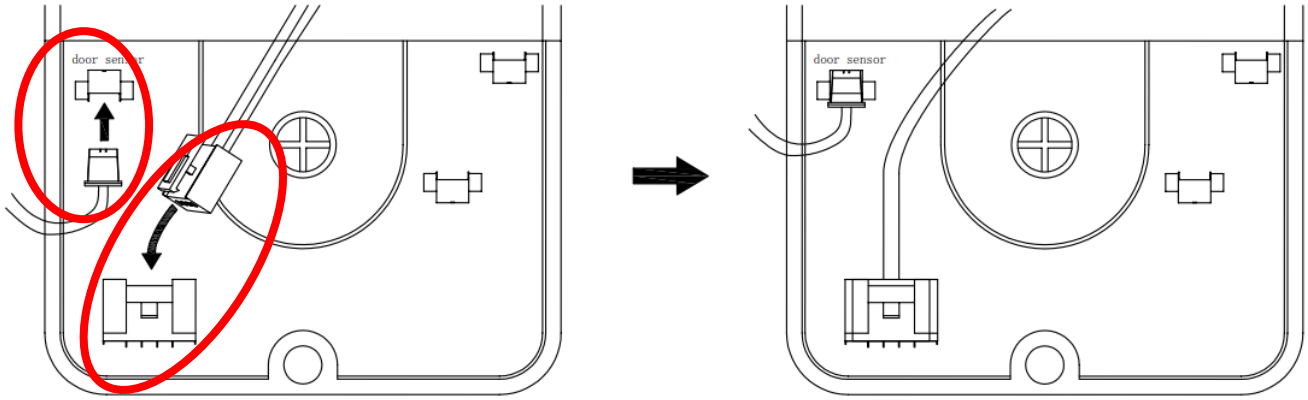

Outside escutcheon cable and connector

Figure I-1

Door Position Sensor
Connector/cable

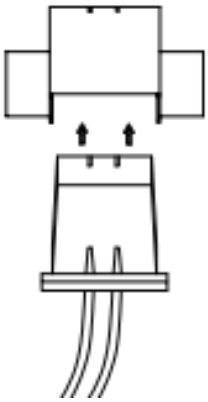

Figure I-2

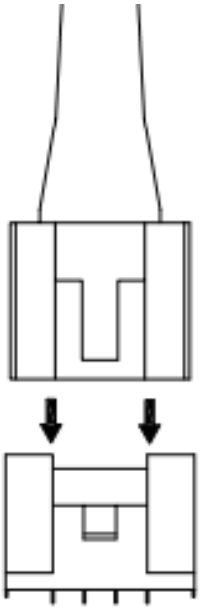

Outside Escutcheon
Cable/Connector

Figure I-3

(4) Install inside escutcheon and door position sensor(For automatic relocking) （see Figure J-1, Figure J-2, Figure J-3, Figure J-4 Figure J-5 ,Figure J-6, Figure J-7）

IMPORTANT: Before installing the batteries, test the mechanical operation of the lock by using both thumb turn and the key. The movement of the bolt should be smooth and unobstructed. If operation is not smooth, review the previous steps to ensure proper installation.(see **Figure J-5**)

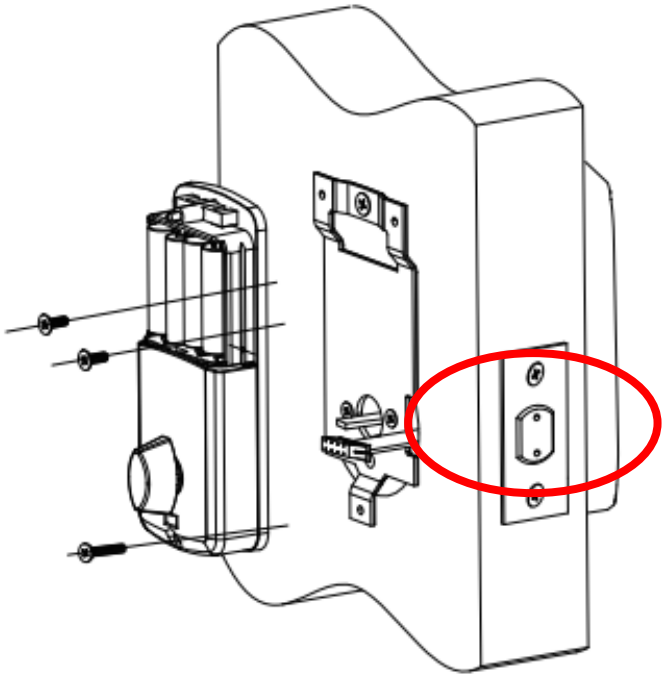

Install inside escutcheon on inside mounting plate, secure with (2) 10mm machine screw and (1) 25mm,machine screw. Note: the bolt must be retracted

Figure J-1

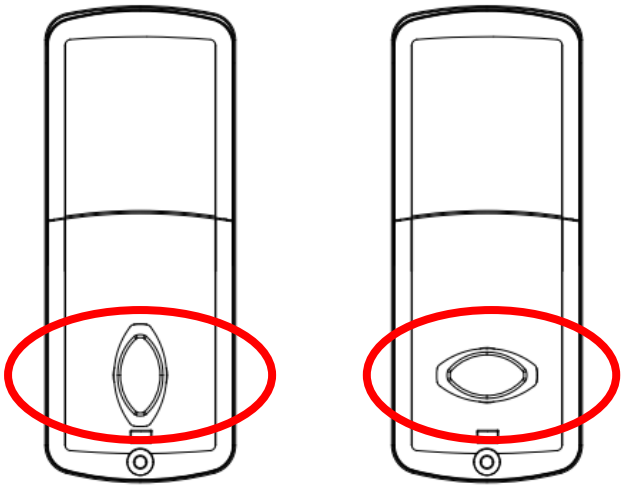

For right handed or left handed door, the thumb turn need to be put in different position prior to installation. And please make sure the bolt is retracted for installation.

Figure J-2

Vertical Position For Right Handed Door

Horizontal Position For Left Handed Door

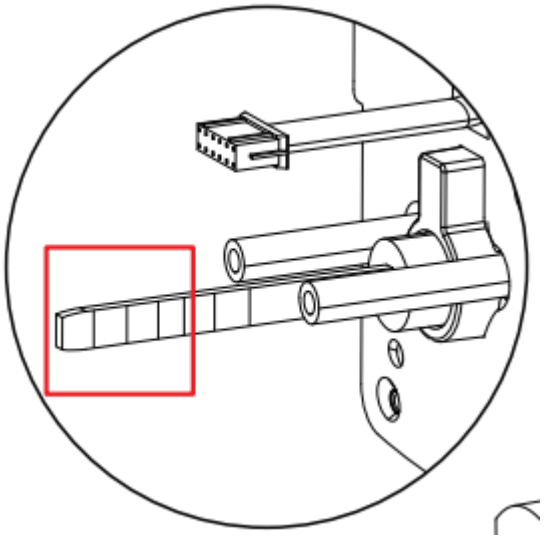

The length of the spindle can be cut to adapt to the depth of the lock

Figure J-3

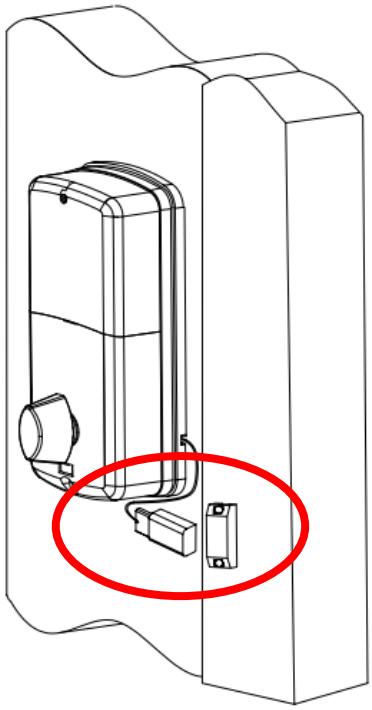

For user need automatic relocking function-------
Install the door position sensor on the side of the door, another part(magnet) need to be installed opposite to the door position sensor. The center of the door position sensor and the magnet need to be aligned in same line.

If user want to use manual relocking, just don't install the door position sensor.

Figure J-4

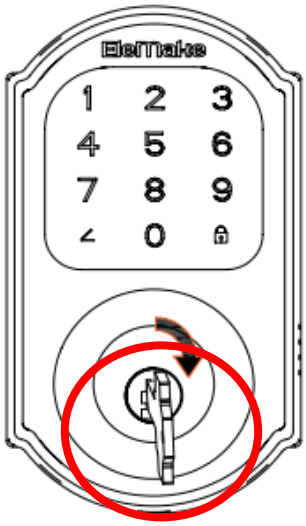

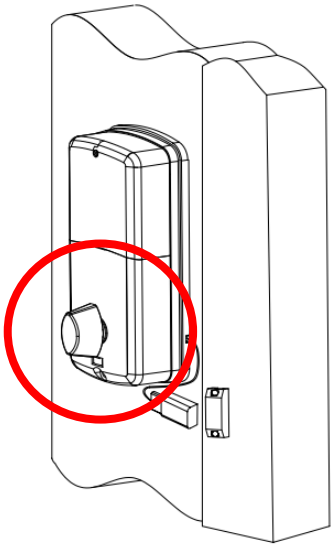

IMPORTANT: Before installing the batteries, test the mechanical operation of the lock by using both thumb turn and the key.
The movement of the bolt should be smooth and unobstructed. If operation is not smooth, review the previous steps to ensure proper installation.

Figure J-5

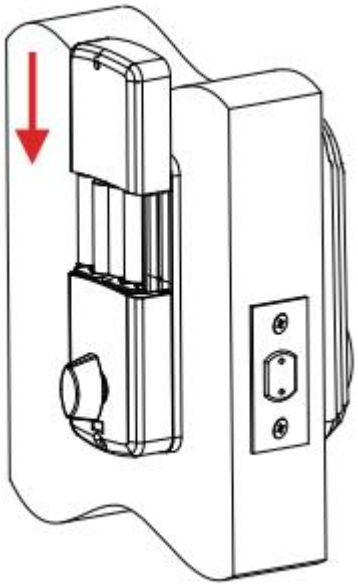

Insert four (4) AA alkaline batteries. The lock keypad will be lighted up. When activating the lock for the first time, please set the rotation direction of the lock

Slide on the battery cover till a "click".

Figure J-6

IMPORTANT: CHOOSE MOTOR ROTATION DIRECTION

After the above installation steps, connect the deadbolt to Smartlife APP (see 4.1---(1) and 4.1---(2)), choose the correct setting for right handed or left handed door (see **Figure J-7**)

Choose COUNTERCLOCKWISE for RIGHT HANDED DOOR
Choose CLOCKWISE for LEFT HANDED DOOR

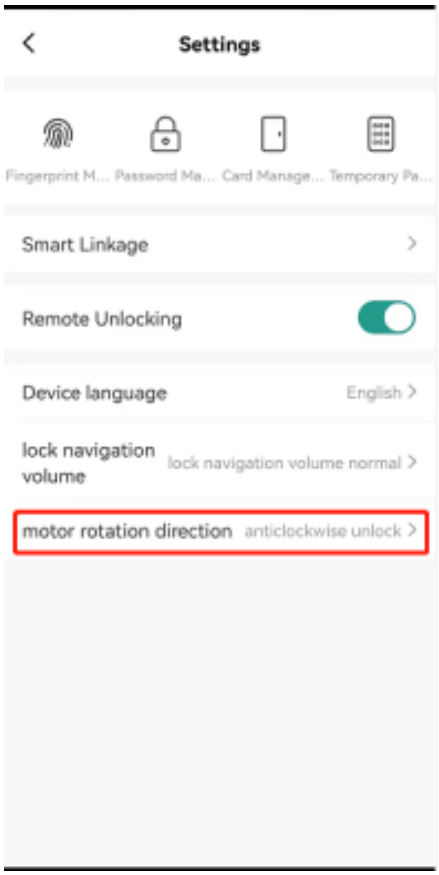

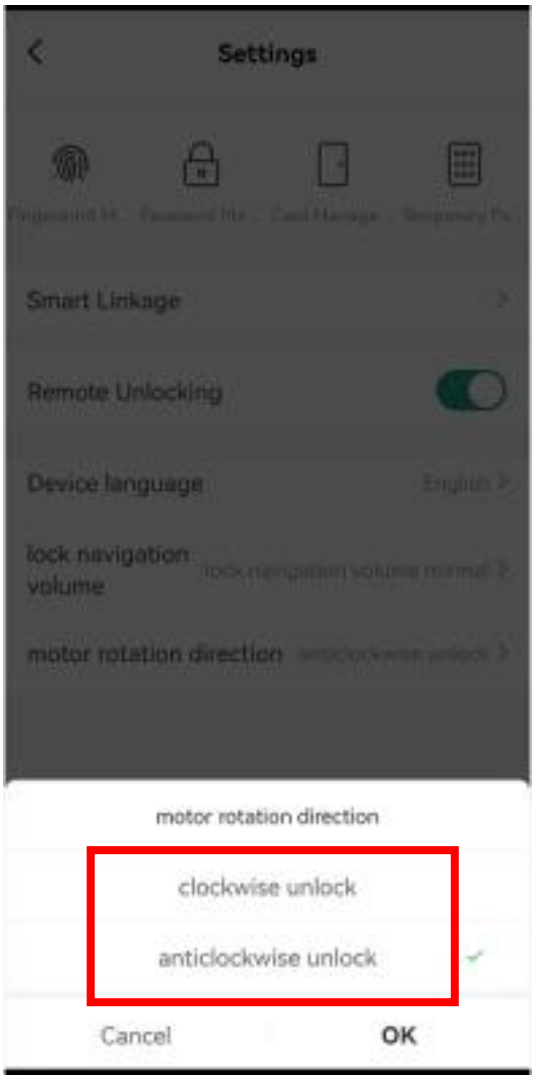

Choose COUNTERCLOCKWISE for RIGHT HANDED DOOR

Choose CLOCKWISE for LEFT HANDED DOOR

Figure J-7

4. SETTING UP WITH APP

4.1 STEPS TO SET UP WITH SMART LIFE APP.

(1) Step 1---earch "Smartlife" APP, download and register and log in. (See Figure K-1)

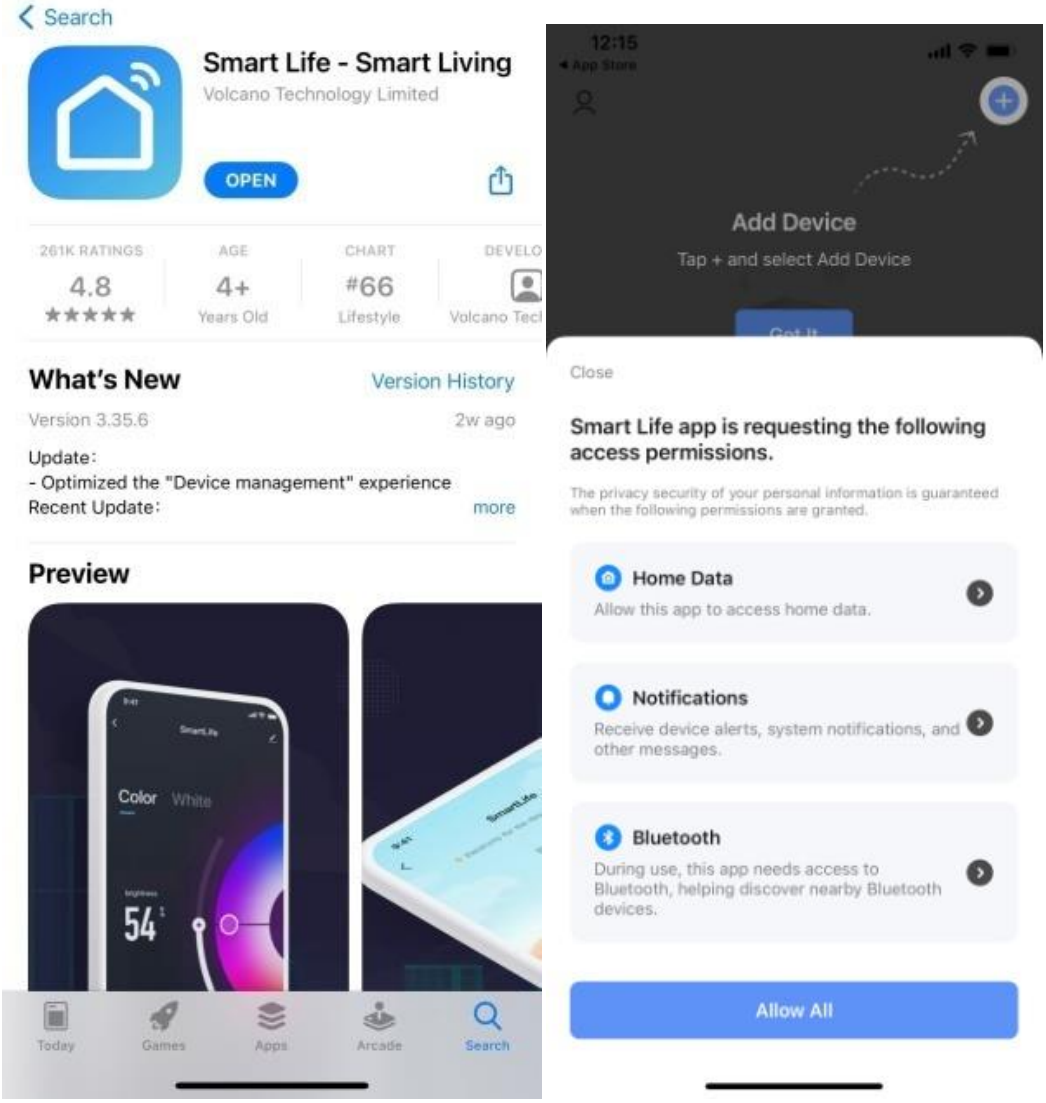

Figure K-1

(2) Step 2--Connect the deadbolt to mobile phone App Smartlife with Bluetooth (See Figure L-1, Figure L-2, Figure L-3 ,Figure L-4)

(a) Turn on the bluetooth on celluar phone.

(b) Touch the screen with back of your hand to activate the deadbolt.(See **Figure L-1**)

(c) Enter the Smartlife app, it automatically find the lock, or you can click" add the device "to search the deadbolt. Then will see the device with Elemake logo. .(See **Figure L-2**)

(d) Click the deadbolt's logo to connect the deadbolt, Name the deadbolt and save. .(See **Figure L-3**)

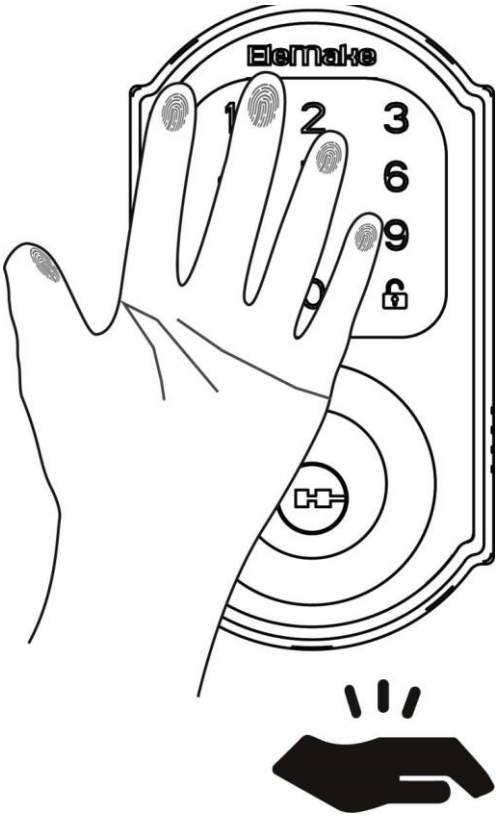

Figure L-1

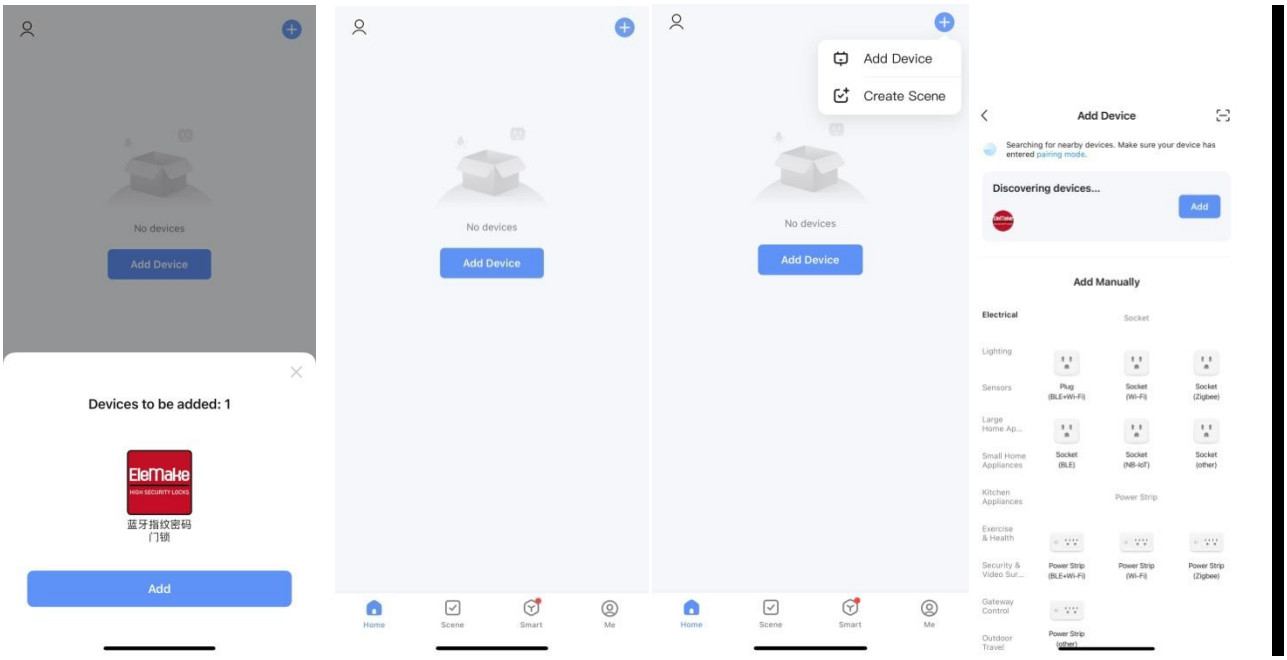

Figure L-2

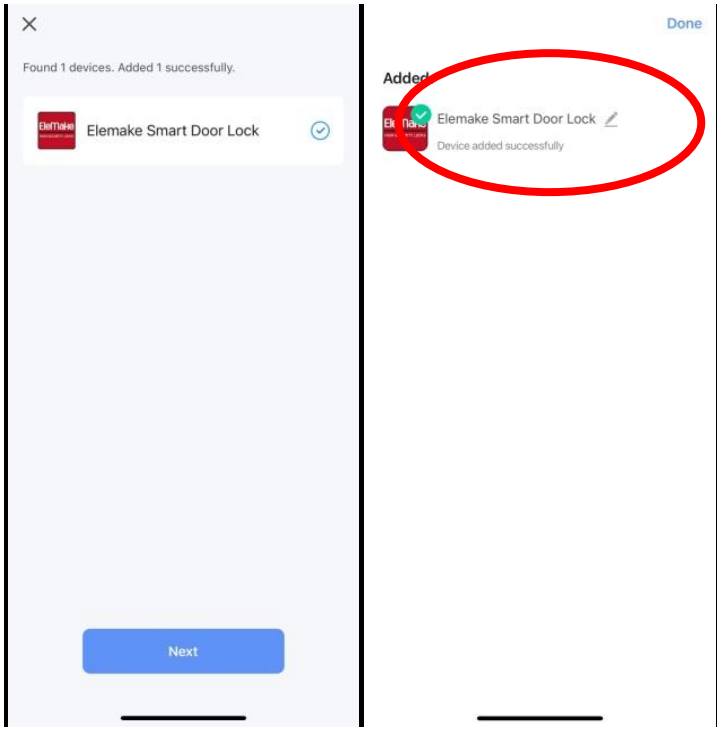

Figure L-3

(e) If successfully connected the Smartlife app with the deadbolt. The opening button on the screen will turn to green colored . User can use the mobile phone to unlock the deadbolt via the Bluetooth. (See **Figure L-4**)

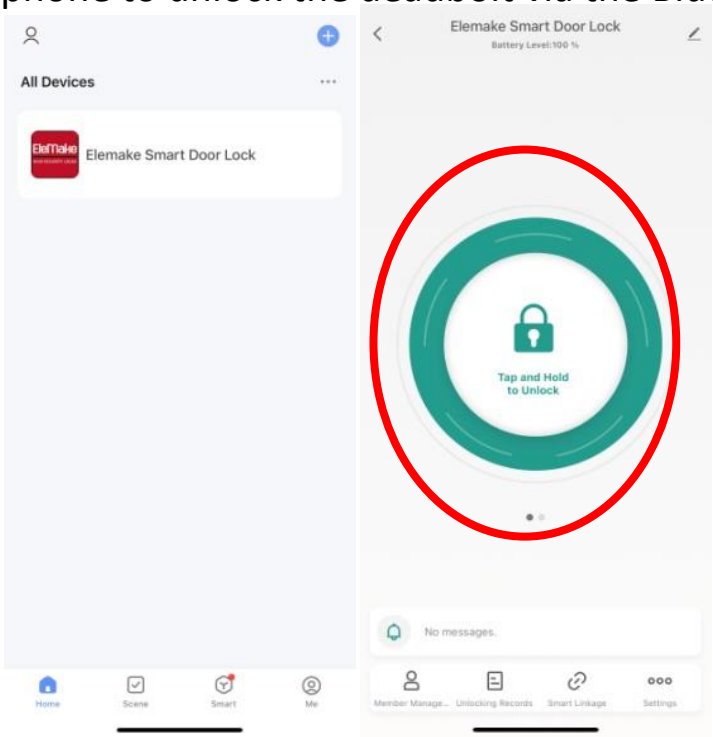

Figure L-4

(3) Step 3--Enroll the fingerprint/password/card for unlocking(See Figure M-1)

Click “Settings”
Click the “Fingerprint management” or “password” or “card”
Follow the APP instruction to enroll the “Fingerprint” or “password” or “card”

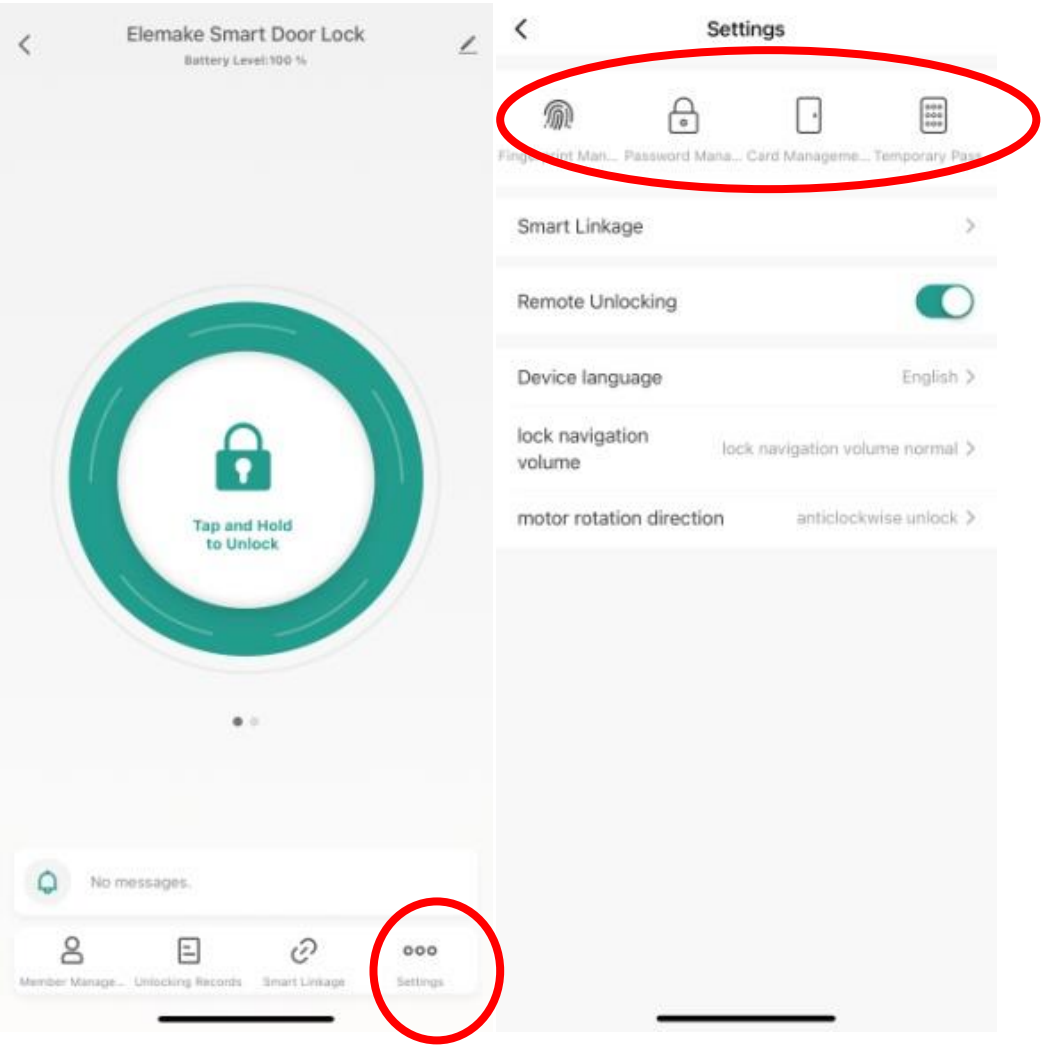

Figure M-1

(4) 4.2 Add member(See Figure N-1)

(a) At the home page of the deadbolt, click “add member”
(b) Choose member type
Family member(administrators)----- the family member with fully authorized, be able to control and use all devices
Other member----with the limited authority by the family member(administrator).
(c) Invite member
Send out the invitation to be member via social messengers including the invitation verification code..
(d) Member download the “smart life” APP and input the invitation verification code. Then became the member.

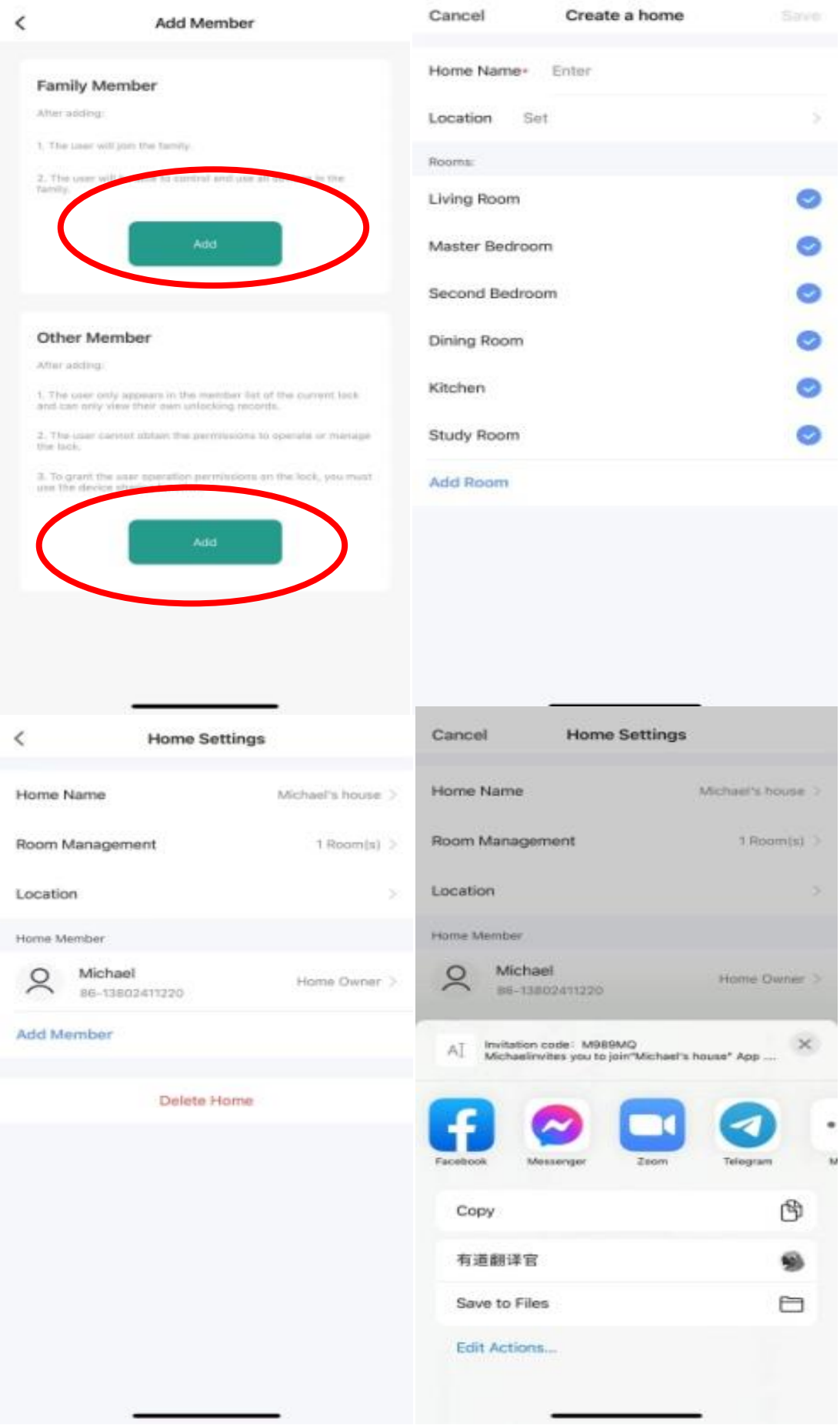
Add Member
Family Member
Add
Other Member
Add
Cancel
Create a home
Save
Home Name*
Enter
Location
Set
Rooms:
Living Room
Master Bedroom
Second Bedroom
Dining Room
Kitchen
Study Room
Add Room
Home Settings
Home Name
Michael's house
Room Management
1 Room(s)
Location
Home Member
Michael
86-13802411220
Home Owner
Add Member
Delete Home
Cancel
Home Settings
Home Name
Michael's house
Room Management
1 Room(s)
Location
Home Member
Michael
86-13802411220
Home Owner
Invitation code: M989MQ
Michaelinvites you to join"Michael's house" App ...
Facebook
Messenger
Zoom
Telegram
Copy
有道翻译官
Save to Files
Edit Actions...

Figure N-1

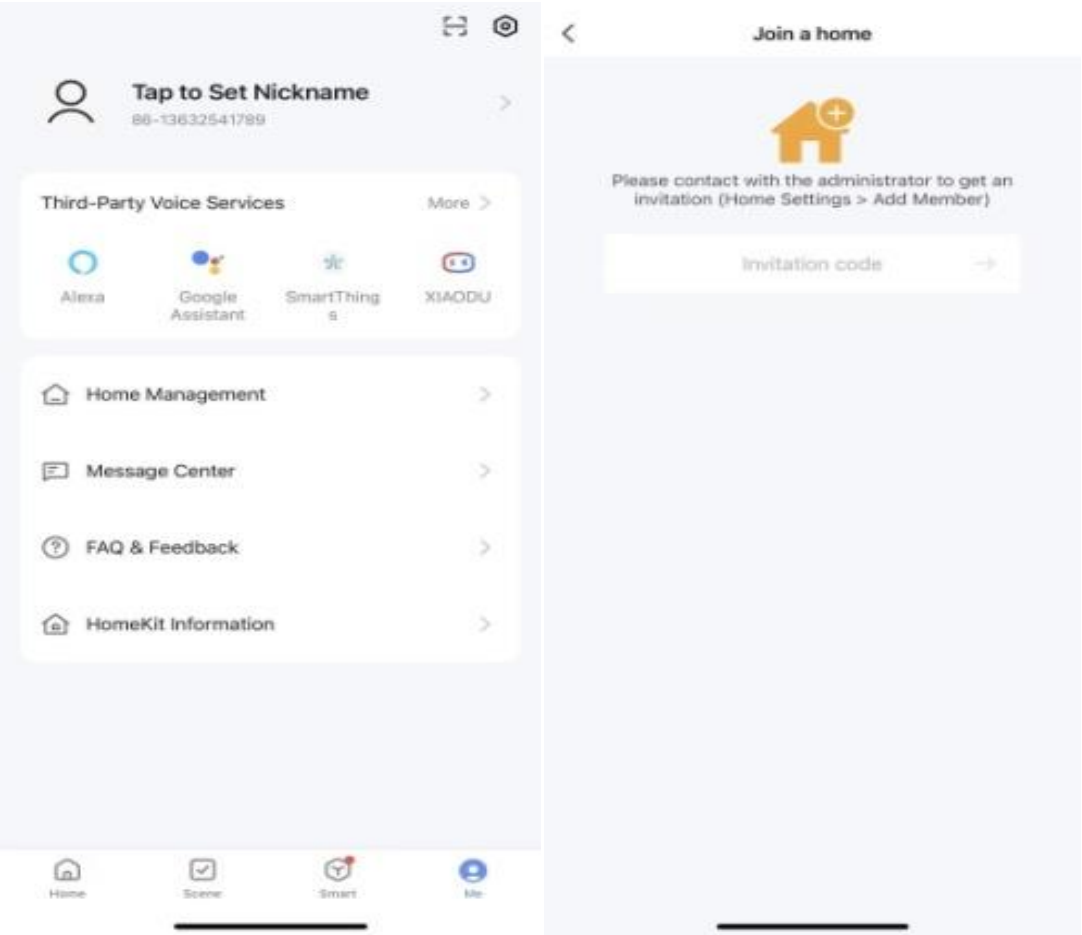

Figure N-1

4.3 Connect WIFI (Optional) (See **Figure O-1, Figure O-2**)

(a)Elemake Internet Wireless Communication Diagram(See **Figure O-1)**

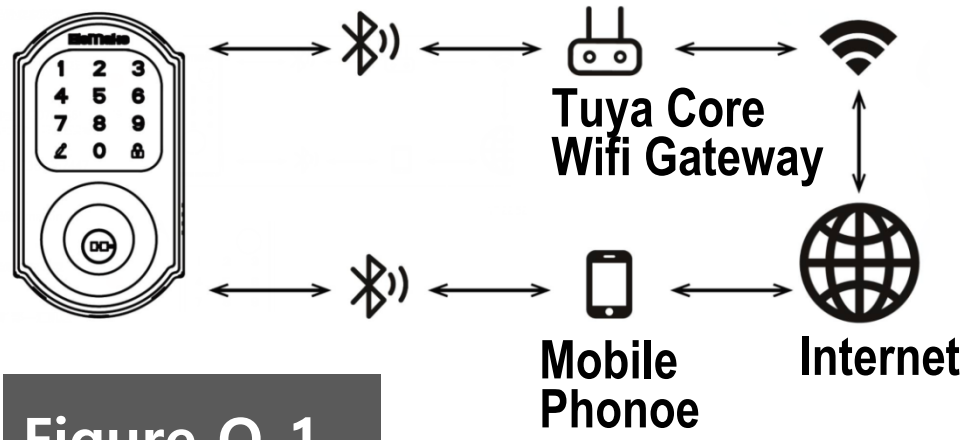

Figure O-1

(b) Setup the Tuya Wifi gateway. (optional)(any wifi gateway with Tuya gateway IC) --If user want to use the internet functions. (See **Figure O-2)**

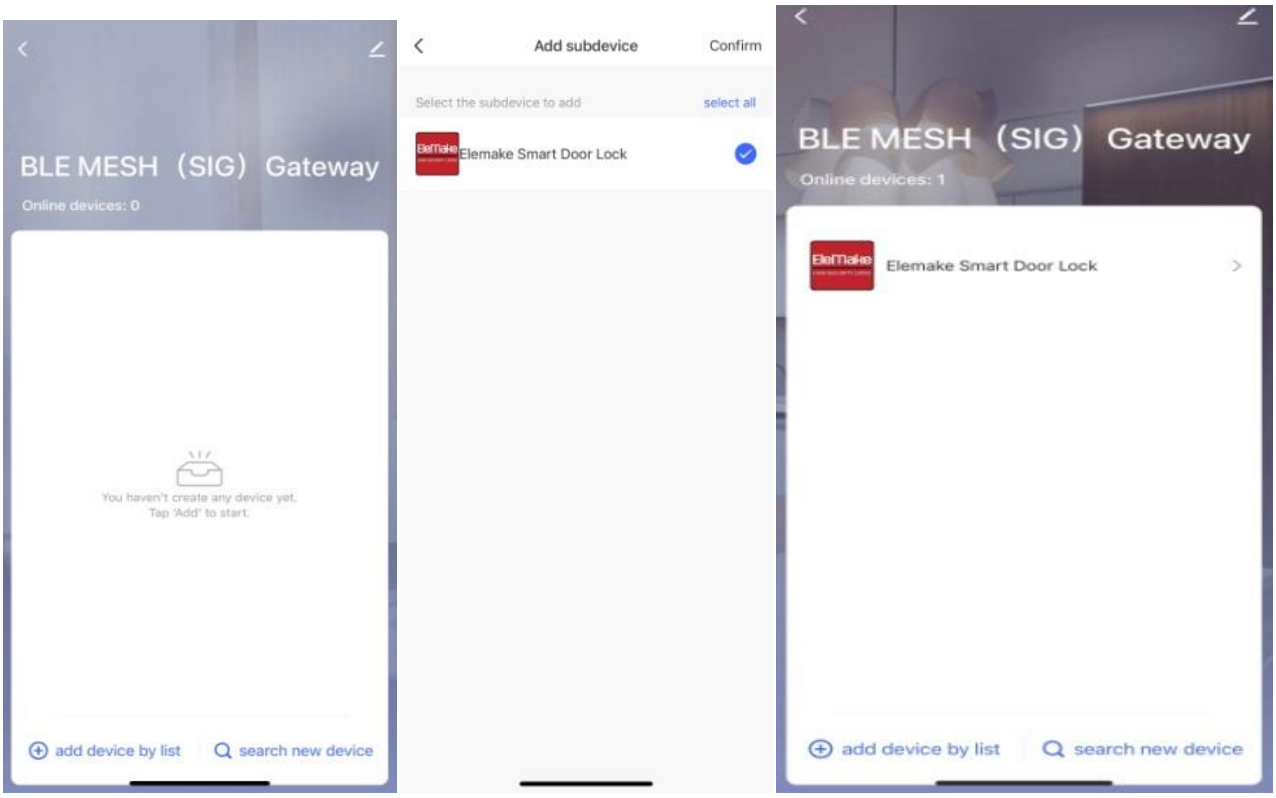

Figure O-2

5. HOW TO USE THE DEADBOLT

NOTE: For most of the functions, user can follow the steps in the app to easily learn how to use the smart deadbolt with common sense, for specific operation, also can refer to below detailed instructions.

5.1 Basic Functions

(1)Password unlocking(See **Figure P-1)**

(a) Touch the screen with the back of your hand or fingers to activate

(b) Start with entering “I” write key,

Enter password.

End with entering “lock” lock key

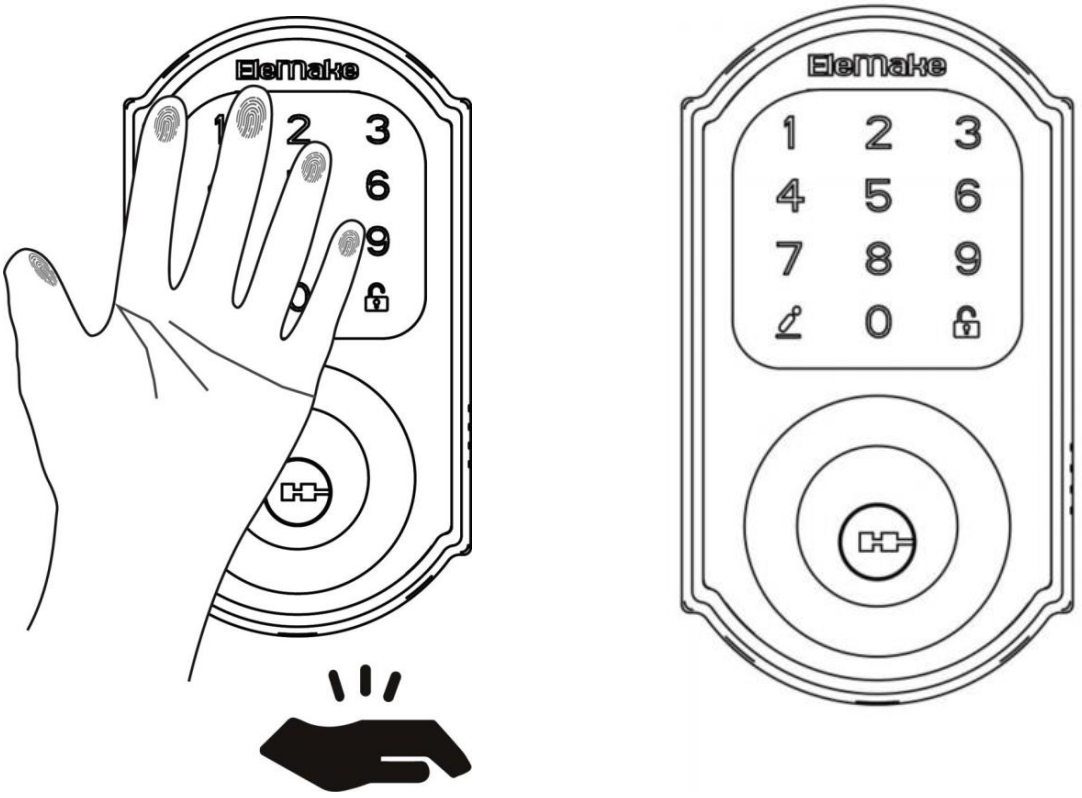

Figure P-1

(1) Fingerprint unlocking(See **Figure P-2)**
Put the finger on the fingerprint reader. Deadbolt will be automatically unlocked.

Figure P-2

(2) Key unlocking (See **Figure P-3)**
Remove the lid with the suction tool, use the key to unlock.

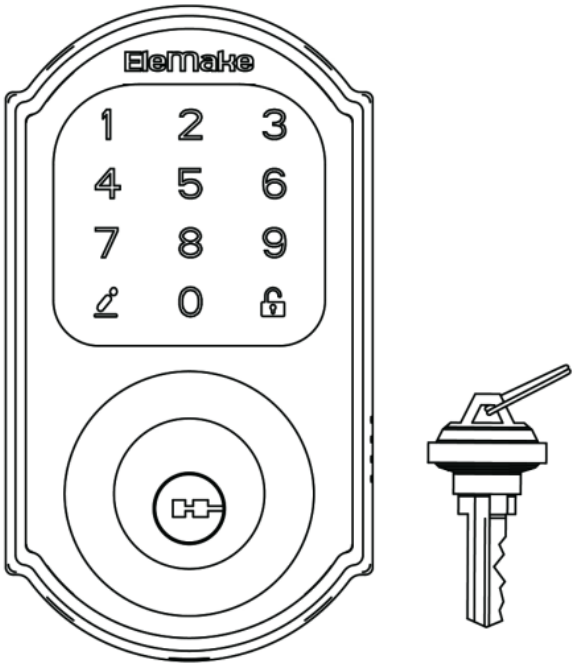

Figure P-3

(3) RF card unlocking (See **Figure P-1)**
Put the RF card to the middle of the escutcheon, user can hear the “beep”, then deadbolt will be automatically unlocked.

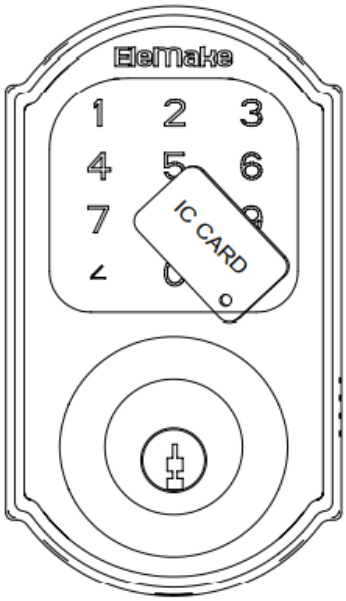

5.1.6 Bluetooth Remote Unlocking with Mobilephone APP.
Turn on the bluetooth of the celluar phone.

(4) Temporary Password:
Off-line One time temporary password unlocking

Off-line reusable temporary password unlocking

(5) Temporary power to outside escutcheon(See **Figure P-4)**
If user did not change the battery timely, when battery is drained, user still can temporarely supply the power to the lock with power bank and Type C charging line from the bottom of outside escutcheon.

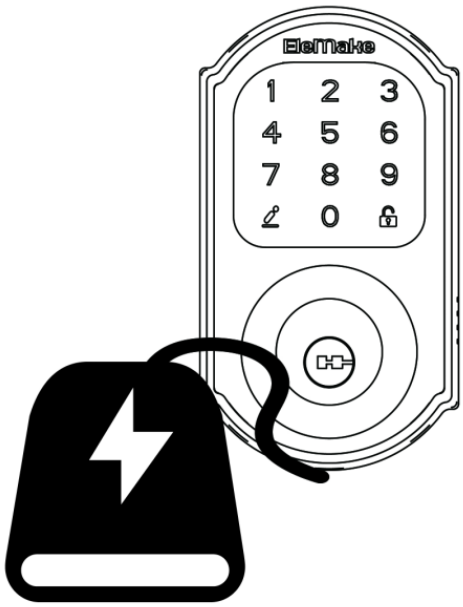

Figure P-3

(6)Lock the door/Relock(See **Figure P-5, Figure P-6)**

a. The door position sensor can detect the status of the lock, if they found that the door is closed, the deadbolt will automatically lock. When the door is in opening status, the deadbolt will not lock.

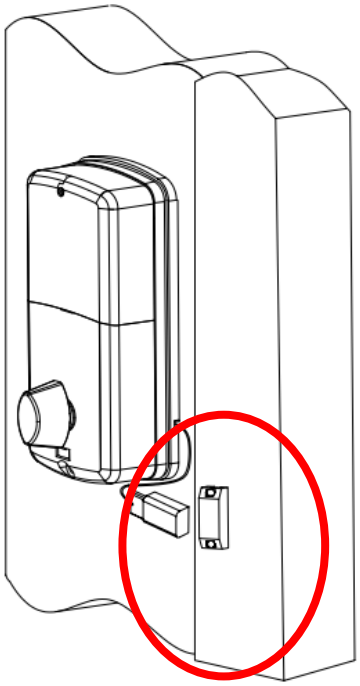

Figure P-5

If user want to close the door manually, just don’t install the door position

sensor.

b. If user want to use the manual locking/relocking, When door is closed, user touch the “lock”, deadbolt will lock. (See **Figure P-6)**

Figure P-6

(7)Battery level monitoring(real time) (See **Figure P-7)**

User can easily read the percentage of the battery level when turn on the Tuya smart APP and enter the lock page.

At the top of the page, there is the percentage of the battery.(AA Alkaline battery is the preferred type of the battery, don’t recommend to use rechargeable battery)

Figure P-7

(8) Record of deadbolt unlocking history(See **Figure P-8)**

Enter the lock's page, click the "opening record" at the page bottom, user can see all unlocking records with the family member information.

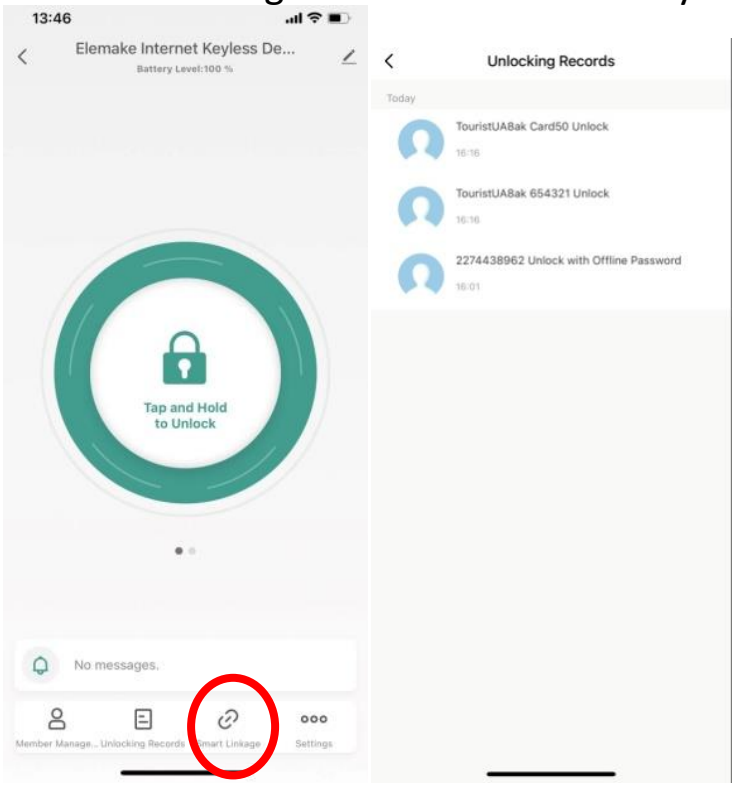

Figure P-8

(9) Choose Languages(See **Figure P-9)**

There are 2 languages options.

English

Spanish

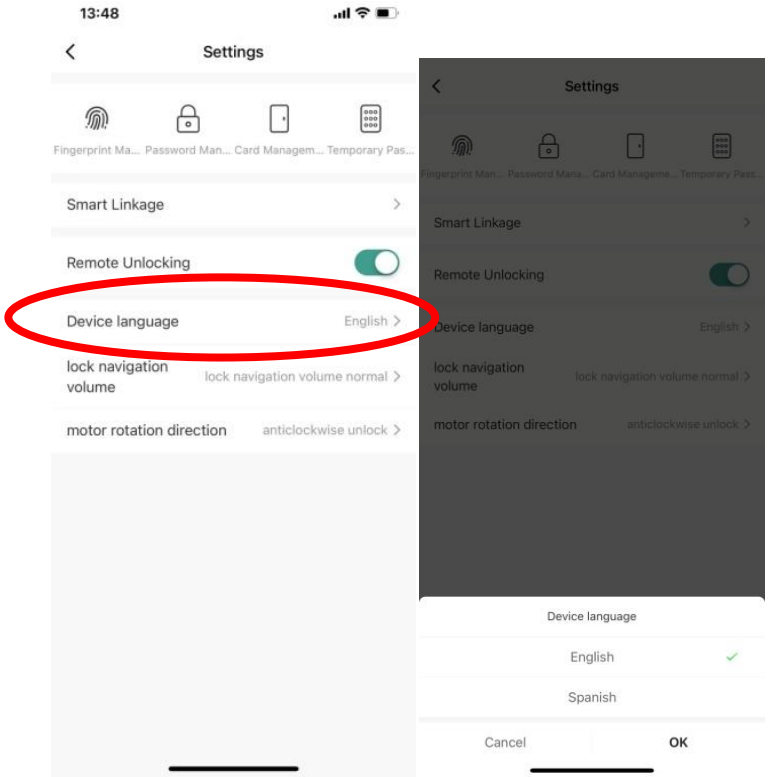

Figure P-9

5.2 INTERNET FUNCTIONS

(1) Separated WIFI design, No Power consumption to battery for WIFI application. (See **Figure Q-1)**

If customer want to use Internet functions, user can purchase the Tuya Wifi gateway from us, separated WIFI bridge (110V wall plug) avoids the high power consumption of the WIFI to use the battery energy, will not consume the battery power in deadbolt.

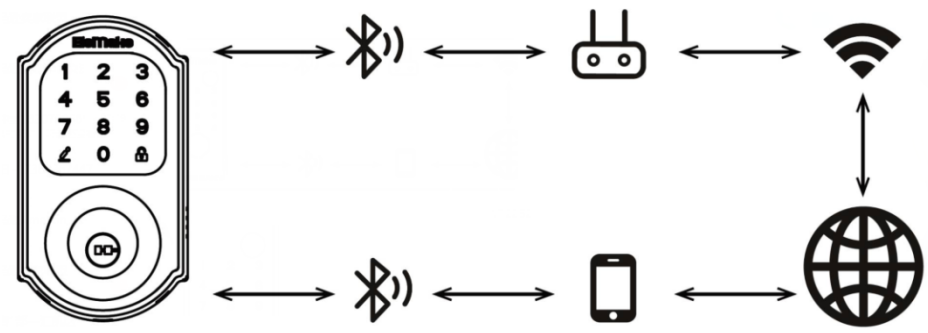

Figure Q-1

(2) Online password unlocking (See **Figure Q-2)**

There are 2 kinds of the online password unlocking, the oline password can use the password defined by the users.
Online One time temporary passwordunlocking(with time limit)
Online Time-limited temporary password unlocking
Choose the type of the password you want, and follow the APP steps.

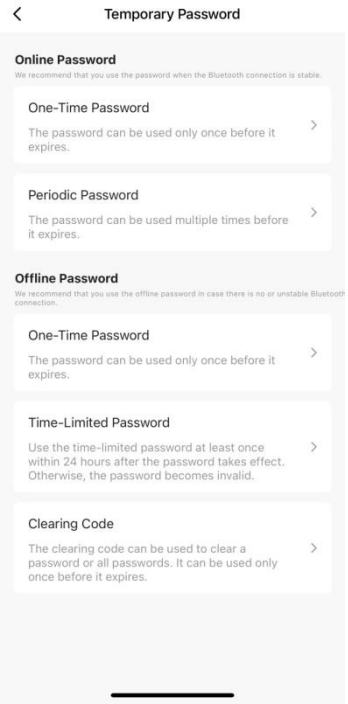

Figure Q-2

(3) Long distance unlocking (See **Figure Q-3)**

If the user already connected the deadbolt to Tuya Wifi gateway, the long distance unlocking function will work where ever you are located as long as there is Internet..

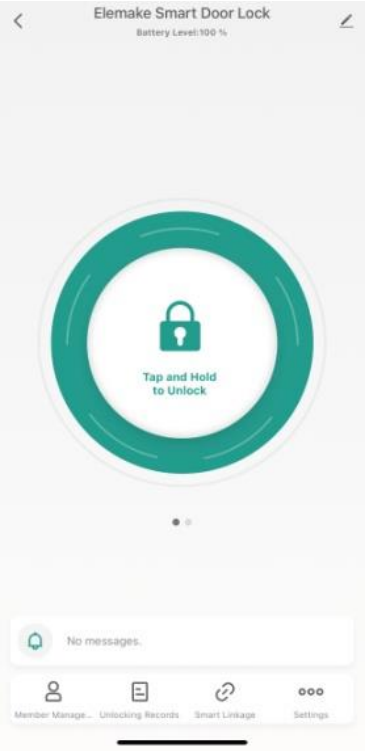

Figure Q-3

(4) Go home alert/door abnormal alert. (See **Figure Q-4)**

Click “smart linkage” on the deadbolt’s home page.>scene>SceneEdit Then to set up the alert.

When the door is opened or in abnormal status, user will get the message/voice or other notification.

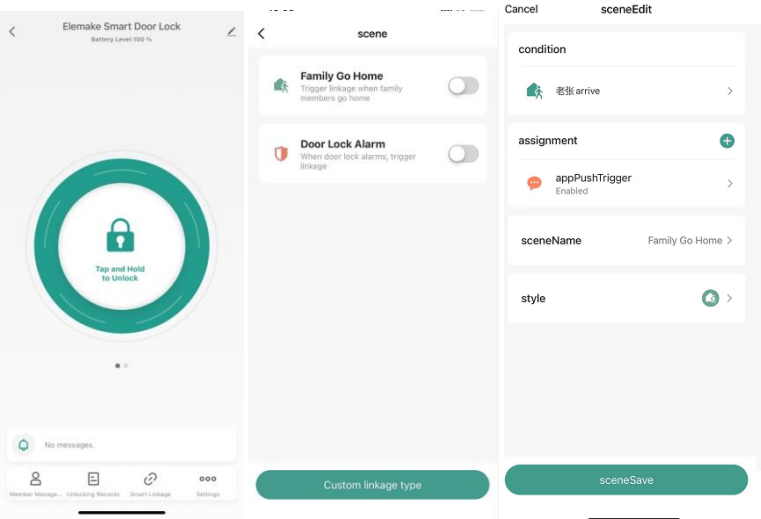

Figure Q-4

(5) Alexa/Google Assitant/Smart Things operations (See **Figure Q-5)**

Turn to the home page>Click “me”, then choose one you like to use. The follow APP steps to operate the deadbolt

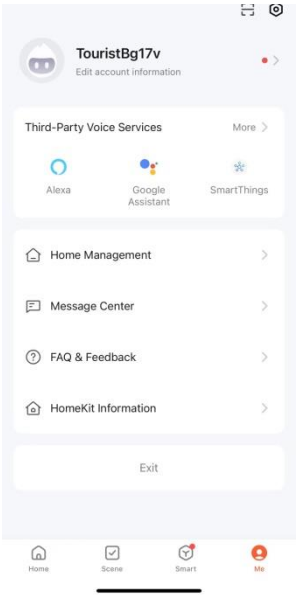

Figure Q-5

(6) Smart Home

Can be use a with Tuya/SmartHome as a related items which can be a part of the smart home system. (See **Figure Q-6)**

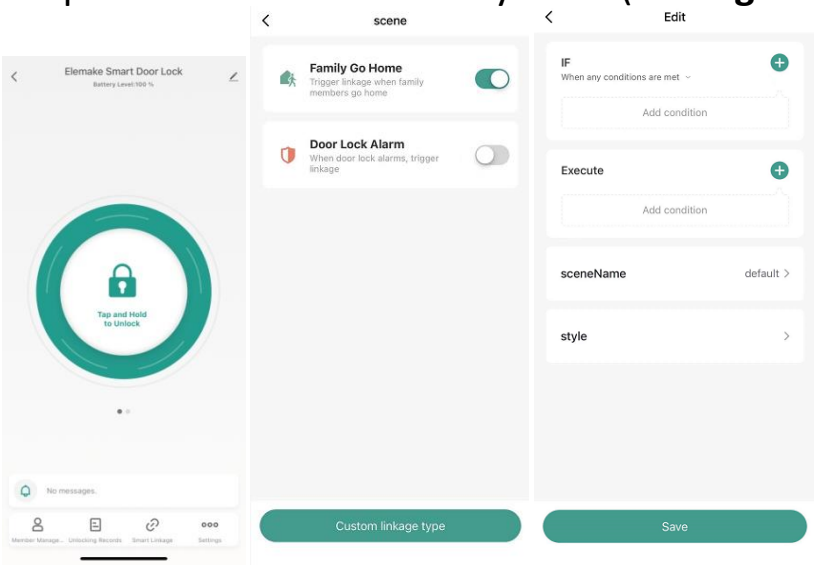

Figure Q-6

6. TROUBLE SHOOTINGS

Troubleshooting (See **Figure R-1)**

Item #	Problem	Cause	Solution
1	The outside escutcheon doesn't fit, the spindle cannot go through the bolt's hole.	The bolt is upside down	Turn the bolt upside down--please see the "up" mark on the bolt
2	The thumb turn cannot work, cannot retract or extrude.	The bolt is not retracted when install the outside escutcheon	Install the outside escutcheon again, make sure the bolt is retracted in installation
3	The latch cannot be fully retracted or extruded, or latch movement is not smooth.	The cable is not positioned under the bolt and is not through the slot on right side of the mounting bracket, The cable blocked the movement of the latch	Route the cable under the bolt and make sure the cable go through the right side slot on the mounting bracket.
4	Cannot retract or extrude the latch	The thumb turn was positioned in incorrect direction in inside escutcheon installation.	Take off the inside escutcheon, turn the thumb turn position according to the right handed or left handed door.
5	Cannot retract or extrude the latch	Incorrectly set the motor rotation direction	For left handed door, should set the thumb turn in vertical position, for the right handed door, should set the thumb turn in horizontal position

Figure R-1

7. QUALITY POLICY

We provide a 5 years warranty for all of our Keyless door lock products from the day of purchase.

Return/replacement Policy
If you want to return/replace the goods for any reason, please contact us directly for return/replacement. In this way, EleMake will be able to pay for the returning shipping cost to avoid loss to any customers.

What if the product is out of return/replacement window, the warranty has expired?

In most cases, we will continuously provide return/replacement service or other support to customers even if the product is out of return/replacement window or the warranty has expired.Please contact us directly so we can better serve you.

For technical/quality questions, please refer to the contacts below. Our technical support team is dedicated to helping you.

Your time is important. We are committed to answering all questions within 1 business day.

LIMITED WARRANTY

LIMITED WARRANTY OF THE LOCK PRODUCTS

With seller warrant to the original purchaser only, that the lock products will be free from defects in material or workmanship for a period of two (5) years from the date of purchase. 1years for the products, if the tool i s used for professional use.

SELLER’S SOLE OBLIGATION AND YOUR EXCLUSIVE REMEDY under this Limited Warranty and, to the extent permitted by law, any warranty or condition implied by law, shall be the repair or replacement of parts, without charge, which are defective in material or workmanship and which have not been misused, carelessly handled, or mis-repaired by persons other than Seller or Authorized Service Center. To make a claim under this Limited Warranty, you must make sure to keep a copy of your proof of purchase that clearly defines the Date of Purchase (mo nth and year) and the Place of Purchase. Third-party vendors such as garage sales, pawnshops, resale shops, or any other secondhand merc hant void the warranty included with this product. Contact **csservice168 @163.com or (800)-315- 9607** to make arrangements for repairs and transportation.

When returning a product for warranty service, The product must be shipped in its original container (or an equivalent), properly packed to withstand the hazards of shipment. The product must be with the proof of purchase enclosed.

There must also be a description of the problem in order to help our repairs department diagnose and fix the issue. Repairs will be made an d the product will be returned and shipped back to the purchaser at no c harge.

THIS LIMITED WARRANTY DOES NOT APPLY TO ACCESSORY ITE MS THAT WEAR OUT FROM REGULAR USAGE OVER TIME INCLU DING SANDING PADS, DISC PAPERS, BELTS, BRUSHES, BLADES, ETC.

ANY IMPLIED WARRANTIES SHALL BE LIMITED IN DURATION TO ONE (1) YEAR FROM THE DATE OF PURCHASE. SOME STATES IN THE U.S., SOME CANADIAN PROVINCES DO NOT ALLOW LIMITATI ONS ON HOW LONG AN IMPLIED WARRANTY LASTS, SO THE ABO VE LIMITATION MAY NOT APPLY TO YOU.

IN NO EVENT SHALL THE SELLER BE LIABLE FOR ANY INCIDENT AL OR CONSEQUENTIAL DAMAGES (INCLUDING BUT NOT LIMITE D TO LIABILITY FOR LOSS OF PROFITS) ARISING FROM THE SALE OR USE OF THIS PRODUCT. SOME STATES IN THE U.S. AND SO ME CANADIAN PROVINCES DO NOT ALLOW THE EXCLUSION OR LIMITATION OF INCIDENTAL OR CONSEQUENTIAL DAMAGES, SO THE ABOVE LIMITATION OR EXCLUSION MAY NOT APPLY TO YO U.

THIS LIMITED WARRANTY GIVES YOU SPECIFIC LEGAL RIGHTS, AND YOU MAY ALSO HAVE OTHER RIGHTS WHICH VARY FROM S TATE TO STATE IN THE U.S., PROVINCE TO PROVINCE IN CANAD

A, AND FROM COUNTRY TO COUNTRY.

THIS LIMITED WARRANTY APPLIES ONLY TO PORTABLE ELECTRI C TOOLS, BENCH POWER TOOLS, OUTDOOR POWER EQUIPMEN T, AND PNEUMATIC TOOLS SOLD WITHIN THE UNITED STATES O F AMERICA, AND CANADA. FOR WARRANTY COVERAGE WITHIN OTHER COUNTRIES, CONTACT US CUSTOMER SUPPORT LINE

www.elemakelocks.com

EleMake Lock Products.

Online customer service----

Facebook #:csservice168@163.com

Skype #: customerservice@products

Email-address: customerservice@elemakelocks.com

Customer service center address:

5448 Apex Peakway, 197 Apex, NC 27502

For Customer Service please call:

(800)315-9607

This device complies with part 15 of the FCC Rules. Operation is subject to the following two conditions: (1) This device may not cause harmful interference, and (2) this device must accept any interference received, including interference that may cause undesired operation.

Any Changes or modifications not expressly approved by the party responsible for compliance could void the user's authority to operate the equipment.

Note: This equipment has been tested and found to comply with the limits for a Class B digital device, pursuant to part 15 of the FCC Rules. These limits are designed to provide reasonable protection against harmful interference in a residential installation. This equipment generates uses and can radiate radio frequency energy and, if not installed and used in accordance with the instructions, may cause harmful interference to radio communications. However, there is no guarantee that interference will not occur in a particular installation. If this equipment does cause harmful interference to radio or television reception, which can be determined by turning the equipment off and on, the user is encouraged to try to correct the interference by one or more of the following measures:

-Reorient or relocate the receiving antenna.

-Increase the separation between the equipment and receiver.

-Connect the equipment into an outlet on a circuit different from that to which the receiver is connected.

-Consult the dealer or an experienced radio/TV technician for help.