Thermal Image Scope

User Manual

Legal Information

About this Manual

The Manual includes instructions for using and managing the Product. Pictures, charts, images and all other information hereinafter are for description and explanation only. The information contained in the Manual is subject to change, without notice, due to firmware updates or other reasons. Please find the latest version of this Manual at the company website Please use this Manual with the guidance and assistance of professionals trained in supporting the Product.

Trademarks Acknowledgement

Trademarks and logos mentioned are the properties of their respective owners.

LEGAL DISCLAIMER

TO THE MAXIMUM EXTENT PERMITTED BY APPLICABLE LAW, THIS MANUAL AND THE PRODUCT DESCRIBED, WITH ITS HARDWARE, SOFTWARE AND FIRMWARE, ARE PROVIDED “AS IS” AND “WITH ALL FAULTS AND ERRORS”. OUR COMPANY MAKES NO WARRANTIES, EXPRESS OR IMPLIED, INCLUDING WITHOUT LIMITATION, MERCHANTABILITY, SATISFACTORY QUALITY, OR FITNESS FOR A PARTICULAR PURPOSE. THE USE OF THE PRODUCT BY YOU IS AT YOUR OWN RISK. IN NO EVENT WILL OUR COMPANY BE LIABLE TO YOU FOR ANY SPECIAL, CONSEQUENTIAL, INCIDENTAL, OR INDIRECT DAMAGES, INCLUDING, AMONG OTHERS, DAMAGES FOR LOSS OF BUSINESS PROFITS, BUSINESS INTERRUPTION, OR LOSS OF DATA, CORRUPTION OF SYSTEMS, OR LOSS OF DOCUMENTATION, WHETHER BASED ON BREACH OF CONTRACT, TORT (INCLUDING NEGLIGENCE), PRODUCT LIABILITY, OR OTHERWISE, IN CONNECTION WITH THE USE OF THE PRODUCT, EVEN IF OUR COMPANY HAS BEEN ADVISED OF THE POSSIBILITY OF SUCH DAMAGES OR LOSS.
YOU ACKNOWLEDGE THAT THE NATURE OF INTERNET PROVIDES FOR INHERENT SECURITY RISKS, AND OUR COMPANY SHALL NOT TAKE ANY RESPONSIBILITIES FOR ABNORMAL OPERATION, PRIVACY LEAKAGE OR OTHER DAMAGES RESULTING FROM CYBER-ATTACK, HACKER ATTACK, VIRUS INSPECTION, OR OTHER INTERNET SECURITY RISKS; HOWEVER, OUR COMPANY WILL PROVIDE TIMELY TECHNICAL SUPPORT IF REQUIRED.
YOU AGREE TO USE THIS PRODUCT IN COMPLIANCE WITH ALL APPLICABLE LAWS, AND YOU ARE SOLELY RESPONSIBLE FOR ENSURING THAT YOUR USE CONFORMS TO THE APPLICABLE LAW. ESPECIALLY, YOU ARE RESPONSIBLE, FOR USING THIS PRODUCT IN A MANNER THAT DOES NOT INFRINGE ON THE RIGHTS OF THIRD PARTIES, INCLUDING WITHOUT LIMITATION, RIGHTS OF PUBLICITY, INTELLECTUAL PROPERTY RIGHTS, OR DATA PROTECTION AND OTHER PRIVACY RIGHTS. YOU SHALL NOT USE THIS PRODUCT FOR ILLEGAL HUNTING ANIMALS, INVASION OF PRIVACY OR ANY OTHER PURPOSE WHICH IS ILLEGAL OR DETRIMENTAL TO THE PUBLIC INTEREST. YOU SHALL NOT USE THIS PRODUCT FOR ANY PROHIBITED END-USES, INCLUDING THE DEVELOPMENT OR PRODUCTION OF WEAPONS OF MASS DESTRUCTION, THE DEVELOPMENT OR PRODUCTION OF CHEMICAL OR BIOLOGICAL WEAPONS, ANY ACTIVITIES IN THE CONTEXT RELATED TO ANY NUCLEAR EXPLOSIVE OR UNSAFE NUCLEAR FUEL-CYCLE, OR IN SUPPORT OF HUMAN RIGHTS ABUSES.
IN THE EVENT OF ANY CONFLICTS BETWEEN THIS MANUAL AND THE APPLICABLE LAW, THE

LATTER PREVAILS.

Regulatory Information

FCC Information

Please take attention that changes or modification not expressly approved by the party responsible for compliance could void the user's authority to operate the equipment.
This device complies with Part 15 of the FCC Rules. Operation is subject to the following two conditions:
(1) This device may not cause harmful interference, and
(2) This device must accept any interference received, including interference that may cause undesired operation.
Note: Due to the device size limit, the above statement may not be disclaimed on the device.
Note: This product has been tested and found to comply with the limits for a Class B digital device, pursuant to Part 15 of the FCC Rules. These limits are designed to provide reasonable protection against harmful interference in a residential installation. This product generates, uses, and can radiate radio frequency energy and, if not installed and used in accordance with the instructions, may cause harmful interference to radio communications. However, there is no guarantee that interference will not occur in a particular installation. If this product does cause harmful interference to radio or television reception, which can be determined by turning the equipment off and on, the user is encouraged to try to correct the interference by one or more of the following measures:
—Reorient or relocate the receiving antenna.
—Increase the separation between the equipment and receiver.
—Connect the equipment into an outlet on a circuit different from that to which the receiver is connected.
—Consult the dealer or an experienced radio/TV technician for help.

EU Conformity Statement

This product and - if applicable - the supplied accessories too are marked with "CE" and comply therefore with the applicable harmonized European standards listed under the Directive 2014/30/EU (EMCD), Directive 2014/35/EU (LVD), Directive 2011/65/EU (RoHS).

This product and - if applicable - the supplied accessories too are marked with "UKCA" and comply therefore with the following directives: Radio Equipment Regulations 2017, Electromagnetic Compatibility Regulations 2016, Electrical Equipment (Safety) Regulations 2016, the Restriction of the Use of Certain Hazardous Substances in Electrical and Electronic Equipment Regulations 2012.

Frequency Bands and Power (for CE/UKCA)

The frequency bands and transmitting power (radiated and/or conducted) nominal limits applicable to the following radio equipment are as follows:

Wi-Fi 2.4 GHz (2.4 GHz to 2.4835 GHz): 20 dBm

Use the power adapter provided by a qualified manufacturer. Refer to the product specification for detailed power requirements.
Use the battery provided by a qualified manufacturer. Refer to the product specification for detailed battery requirements.

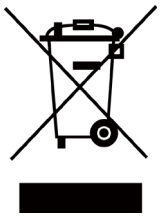

Directive 2012/19/EU (WEEE Directive): Products marked with this symbol cannot be disposed of as unsorted municipal waste in the European Union. For proper recycling, return this product to your local supplier upon the purchase of equivalent new equipment, or dispose of it at designated collection points. For more information see: www.recyclethis.info.
According to the Waste Electrical and Electronic Equipment Regulations 2013: Products marked with this symbol cannot be disposed of as unsorted municipal waste in the United Kingdom. For proper recycling, return this product to your local supplier upon the purchase of equivalent new equipment, or dispose of it at designated collection points. For more information see: www.recyclethis.info.

Directive 2006/66/EC and its amendment 2013/56/EU (Battery Directive): This product contains a battery that cannot be disposed of as unsorted municipal waste in the European Union. See the product documentation for specific battery information. The battery is marked with this symbol, which may include lettering to indicate cadmium (Cd), lead (Pb), or mercury (Hg). For proper recycling, return the battery to your supplier or to a designated collection point. For more information see: www.recyclethis.info.

According to the Batteries and Accumulators (Placing on the Market) Regulations 2008 and the Waste Batteries and Accumulators Regulations 2009: This product contains a battery that cannot be disposed of as unsorted municipal waste in the United Kingdom. See the product documentation for specific battery information. The battery is marked with this symbol, which may include lettering to indicate cadmium (Cd), lead (Pb), or mercury (Hg). For proper recycling, return the battery to your supplier or to a designated collection point. For more information see: www.recyclethis.info.

Symbol Conventions

The symbols that may be found in this document are defined as follows.

Symbol	Description
Danger	Indicates a hazardous situation which, if not avoided, will or could result in death or serious injury.
Caution	Indicates a potentially hazardous situation which, if not avoided, could result in equipment damage, data loss, performance degradation, or unexpected results.
Note	Provides additional information to emphasize or supplement important points of the main text.

Safety Instruction

These instructions are intended to ensure that user can use the product correctly to avoid danger or property loss.

Laws and Regulations

- Use of the product must be in strict compliance with the local electrical safety regulations.

Transportation

- Keep the device in original or similar packaging while transporting it.
- Keep all wrappers after unpacking them for future use. In case of any failure occurred, you need to return the device to the factory with the original wrapper. Transportation without the original wrapper may result in damage on the device and the company shall not take any responsibilities.
- DO NOT drop the product or subject it to physical shock. Keep the device away from magnetic interference.

Power Supply

- Please purchase the charger by yourself. Input voltage should meet the Limited Power Source (5 VDC to 12 VDC) according to the IEC61010-1 standard. Please refer to technical specifications for detailed information.
- Use the power adapter provided by qualified manufacturer. Refer to the product specification for detailed power requirements.
- Make sure the plug is properly connected to the power socket.
- DO NOT connect multiple devices to one power adapter, to avoid over-heating or fire hazards caused by overload.

Battery

- Improper use or replacement of the battery may result in explosion hazard. Replace with the same or equivalent type only.
- The built-in battery type is MS621R, and the battery size should be 6.7 mm × 2.1 mm. The rated voltage and capacity are 3 VDC/3mA.
- The external removable battery type is CR123A, and the rated voltage and capacity are 3.7 VDC and 1700 mAh. Dispose of used batteries in conformance with the instructions provided by the battery manufacturer.
- The rated voltage and capacity of the battery pack are 7.4 VDC and 7300 mAh.
- Use the battery provided by a qualified manufacturer. Refer to the product specification for detailed battery requirements.
- Confirm there is no flammable material within 2 m of the charger during charging.
- DO NOT place the battery near heating or fire source. Avoid direct sunlight.
- DO NOT place the battery in the reach of children.
- This equipment is not suitable for use in locations where children are likely to be present.
- Do not dispose of the battery into fire or a hot oven, or mechanically crush or cut the battery, which may result in an explosion.

- Do not leave the battery in an extremely high temperature surrounding environment, which may result in an explosion or the leakage of flammable liquid or gas.
- Do not subject the battery to extremely low air pressure, which may result in an explosion or the leakage of flammable liquid or gas.

Maintenance

- If the product does not work properly, please contact your dealer or the nearest service center. We shall not assume any responsibility for problems caused by unauthorized repair or maintenance.
- Wipe the device gently with a clean cloth and a small quantity of ethanol, if necessary.
- If the equipment is used in a manner not specified by the manufacturer, the protection provided by the device may be impaired.
- It is recommended to reboot the device every 2 hours when using it to ensure the device performance.

Using Environment

- Make sure the running environment meets the requirement of the device. The operating temperature shall be between -30°C to 50°C (-22°F to 122°F), and humidity shall be from 5% to 95%.
- DO NOT expose the device to high electromagnetic radiation or dusty environments.
- DO NOT aim the lens at the sun or any other bright light.
- Place the device in a dry and well-ventilated environment.
- When any laser equipment is in use, make sure that the device lens is not exposed to the laser beam, or it may burn out.

Emergency

If smoke, odor, or noise arises from the device, immediately turn off the power, unplug the power cable, and contact the service center.

COMPLIANCE NOTICE: The thermal series products might be subject to export controls in various countries or regions, including without limitation, the United States, European Union, United Kingdom and/or other member countries of the Wassenaar Arrangement. Please consult your professional legal or compliance expert or local government authorities for any necessary export license requirements if you intend to transfer, export, re-export the thermal series products between different countries.

Table of Contents

Chapter 1 Overview **1**
1.1 Device Description 1
1.2 Main Function 1
1.3 Appearance 1
1.3.1 Interface 1
1.3.2 Button 3
Chapter 2 Preparation **5**
2.1 Cable Connection 5
2.2 Install Battery 5
2.3 Install Rail 7
2.4 Power On/Off 8
2.5 Interface Description 9
2.5.1 Status Bar Settings 9
2.5.2 Shortcut Menu Description 9
2.5.3 Menu Description 10
Chapter 3 Image Settings **11**
3.1 Adjust Diopter 11
3.2 Adjust Focus 11
3.3 Adjust Brightness 12
3.4 Adjust Contrast 12
3.5 Select Scene 13
3.6 Set Palettes 13
3.7 Correct Defective Pixel 16
3.8 Flat Field Correction 17
3.9 Set PIP 17
3.10 Adjust Digital Zoom 18
3.11 Synchronize Time 18
Chapter 4 Crosshair Settings **19**
4.1 Select Crosshair Memory 19
4.2 Set Crosshair 19

Chapter 5 Measure Distance **22**
Chapter 6 Picture and Video **23**
6.1 Capture Picture 23
6.2 Record Video 23
6.3 Export Files 24
Chapter 7 Network Connection **25**
Chapter 8 Language Settings **26**
Chapter 9 Video Output **27**
Chapter 10 Maintenance **28**
10.1 View Device Information 28
10.2 Format eMMC 28
10.3 Upgrade Device 28
11.4 Restore Device 29

Chapter 1 Overview

1.1 Device Description

The thermal image scope is equipped with high-sensitivity IR detector and advanced thermal imaging technology, which gets clear view in poor visibility or dark environment.
It helps to view the target and measure the distance. It can aim at the moving target and meet the outdoor condition. The device can be widely used in searching and rescuing, hiking, travel, etc.

1.2 Main Function

- Image Mode: The device supports palettes switch and PIP.
- Crosshair Function: The crosshair helps you to aim at the target fast and accurately.
- Image Correction: The device supports DPC (Defective Pixel Correction) and FFC (Flat Field Correction) which can optimize the image quality.
- Distance Measurement: The device can detect the distance between the target and the device.
- Picture and Video: The device can capture snapshots and record videos.

1.3 Appearance

There are two types of thermal image scopes. Please take the actual product for reference. The buttons, components, and interface of the two types of thermal image scopes are the same.

1.3.1 Interface

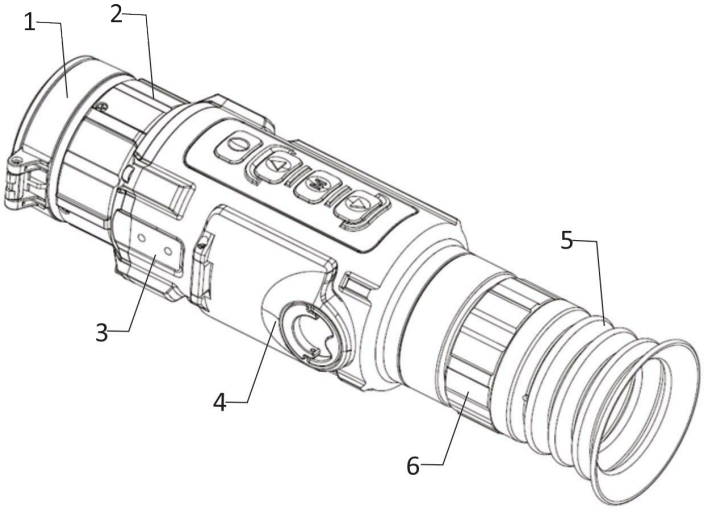

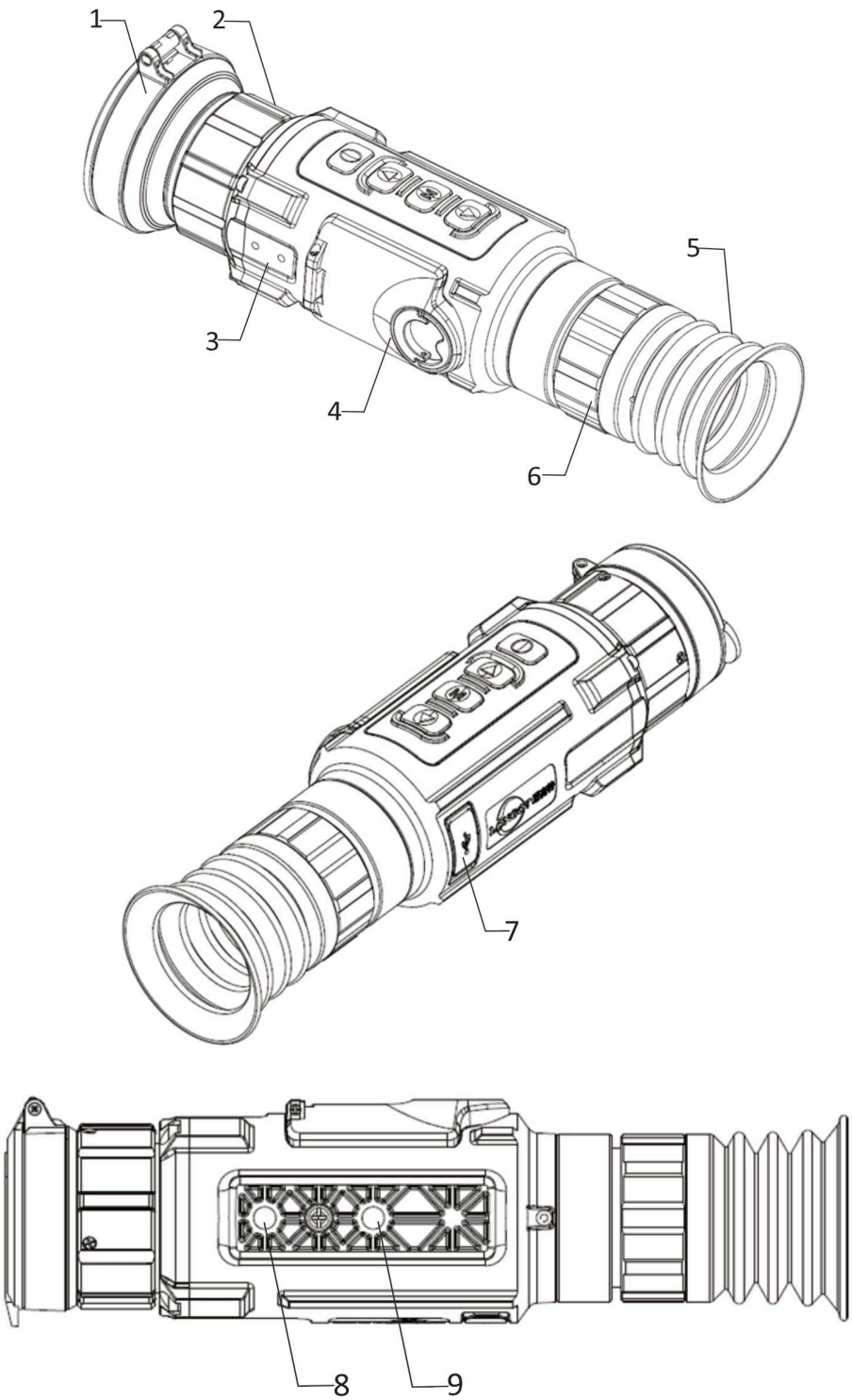

Figure 1-1 Components and Interfaces

Table 1-1 Description of Components and Interfaces

No.	Component	Function
1	Lens Cover	Protect the lens.

2	Focus Ring	Adjust the focal length.
3	Expansion Rail Hole	Install the expansion rail.
4	Battery Compartment	Install the device battery in it.
5	Eyepiece	View the target.
6	Diopter Adjustment Ring	Adjust the dioptric correction.
7	Data Exchange Interface	Charge the device and transmit data.
8 & 9	Rail Interface	Install the rail.

1.3.2 Button

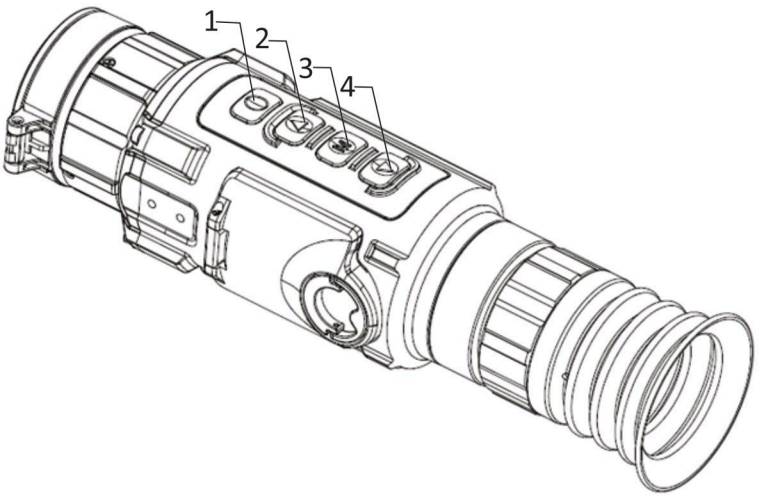

Figure 1-2 Buttons on Device

Table 1-2 Description of Buttons

No.	Icon	Button	Description
1		Power	● Press: Standby mode/wake up device ● Hold: Power on/off
2		Up	● Press: Select parameters/switch digital zoom ● Hold: Select parameters/FFC
3	M	Menu	● Press: Enter shortcut menu ● Hold: Enter/exit menu

4		Down	● Press: Select parameters/capture ● Hold: Start/stop recording

Note

Combination Button:

- + M: Enable/disable crosshair
- + M: Enable/disable distance measurement

Chapter 2 Preparation

2.1 Cable Connection

Connect the device and power adaptor with a type-C cable to charge the device. Alternatively, connect the device and PC to export files.

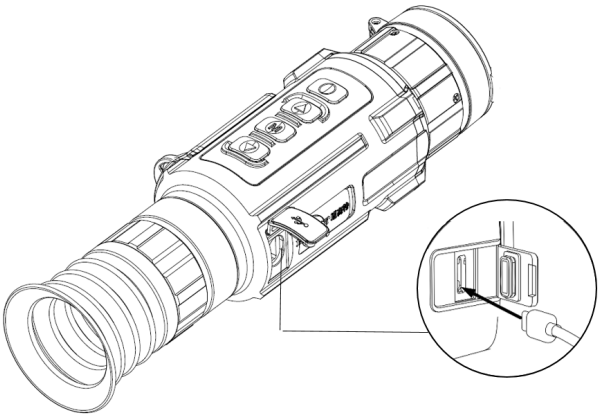

Figure 2-1 Cable Connection

2.2 Install Battery

Insert the batteries into the battery compartment.

Before You Start

- The device supports 3.0 V or 3.7 V battery.
- Select the correct battery voltage in the device menu after you install the battery, or it may cause device exception. The default battery voltage is 3.0 V.

Steps

1. Turn the battery cover anticlockwise to loosen it.

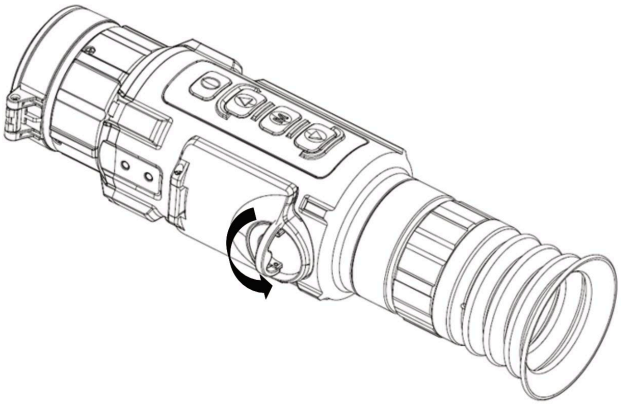

Figure 2-2 Loosen the Cover

2. Insert batteries into the battery compartment with the positive mark inward.

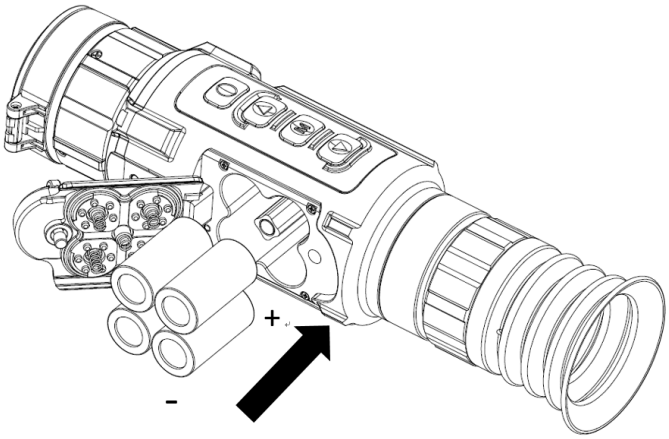

Figure 2-3 Install the Battery

3. Turn the battery cover clockwise to tighten it.

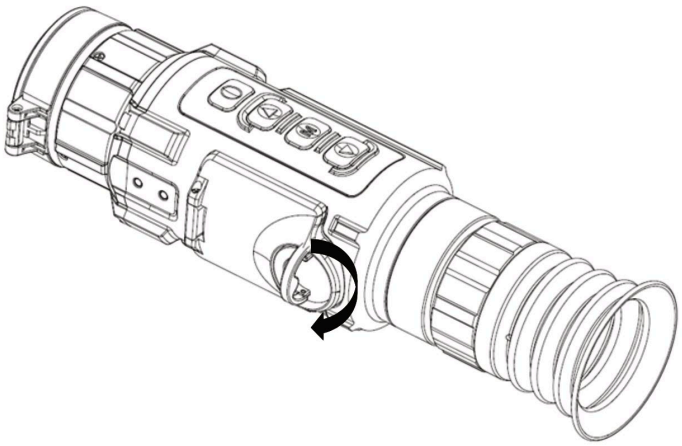

Figure 2-4 Tighten the Cover

Take the batteries away if the device is not used for a long time.

2.3 Install Rail

Before You Start

- Turn off the device first.
- Use the Non-dust cloth to clean the device base and the rail.

Steps

1. Install the device to the rail as the arrow shows.
2. Insert the screws, and tighten them.

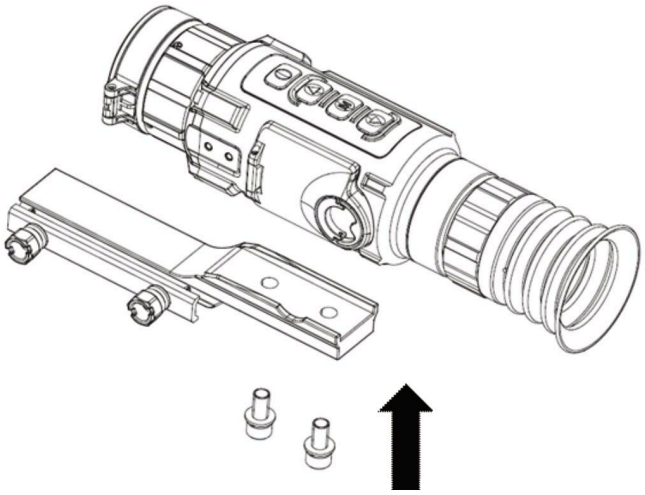

Figure 2-5 Install Rail and Tighten Screws

3. Tighten the knobs to secure the device.

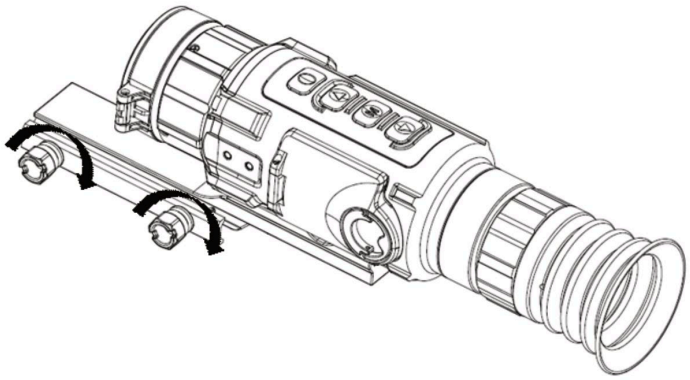

Figure 2-6 Tighten Knobs

4. Insert and tighten the screws to fix the expansion rail.

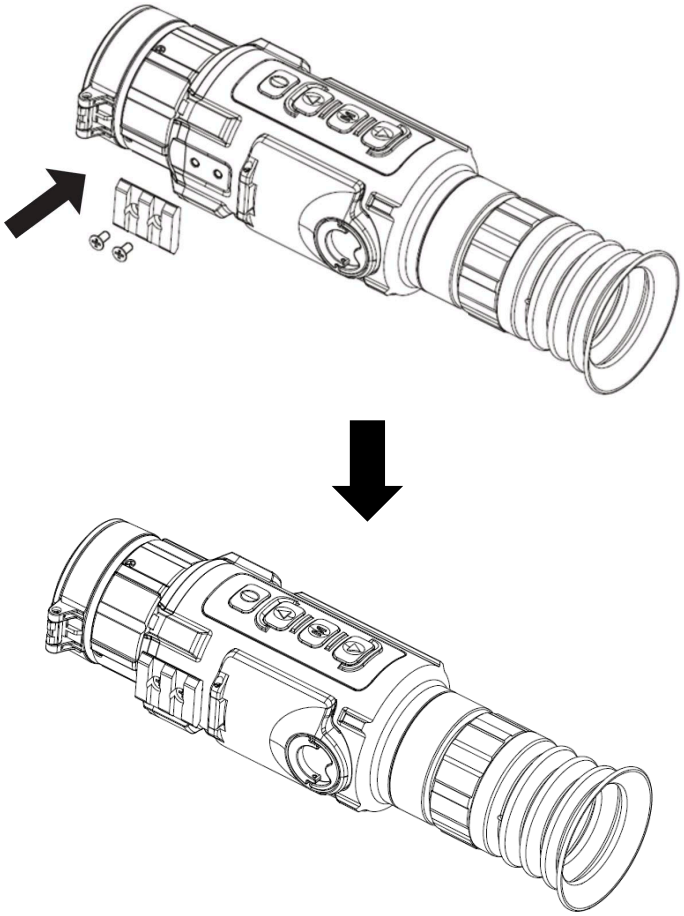

Figure 2-7 Install Expansion Rail and Tighten Screws

2.4 Power On/Off

Power On

When the battery is sufficiently charged, press to power on the device.

Power Off

When the device is turned on, hold for 2 seconds to power off the device.

Note

- See the battery icon for the electricity quantity. means the battery is fully charged or the device is charged by external power, and means that the battery is low.
- When the low power note shows, charge the battery.

2.5 Interface Description

When the device is turned on, you can see the live view interface.

Figure 2-8 Live View Interface

2.5.1 Status Bar Settings

You can choose whether to display the status bar in the live view interface in this function.

Steps

1. Hold M to go to the menu.
2. Press ▲ or ▼ to select (**Status Bar Settings**), and press M to enter status bar setting interface.
3. In the status bar Interface, press ▲ or ▼ to select **Display** or **Auto-Hide**.
4. Hold M to save settings and exit.

2.5.2 Shortcut Menu Description

When the device is turned on, press M to show the shortcut menu.

In the shortcut menu, you can press ▲ or ▼ to select functions, press M to configure the selected function, and hold M to save settings and exit.

Figure 2-9 Shortcut Menu Interface

2.5.3 Menu Description

When the device is turned on, hold M to show the menu.

In the menu, you can press ▲ or ▼ to select functions, press M to configure the selected function, and hold M to save settings and exit.

Figure 2-10 Menu Interface

Chapter 3 Image Settings

3.1 Adjust Diopter

Steps

1. Power on the device.
2. Open the lens cover.
3. Hold the device and make sure the eyepiece covers your eye.
4. Adjust the focus ring until the OSD text or image is clear.

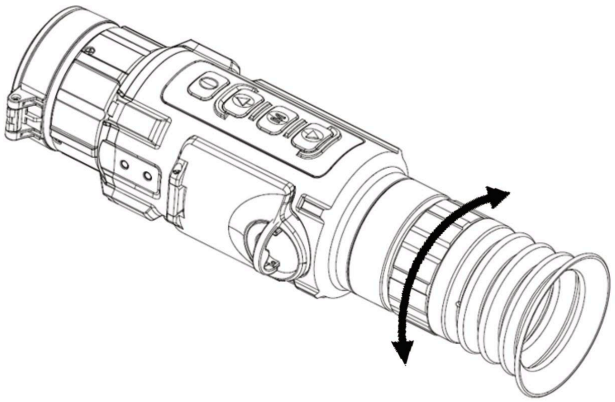

Figure 3-1 Adjust Diopter

Note

When adjusting diopter, DO NOT touch the surface of lens to avoid smearing the lens.

3.2 Adjust Focus

Steps

1. Power on the device.
2. Hold the device and make sure the eyepiece covers your eye.
3. Adjust the focus ring until the image is clear.

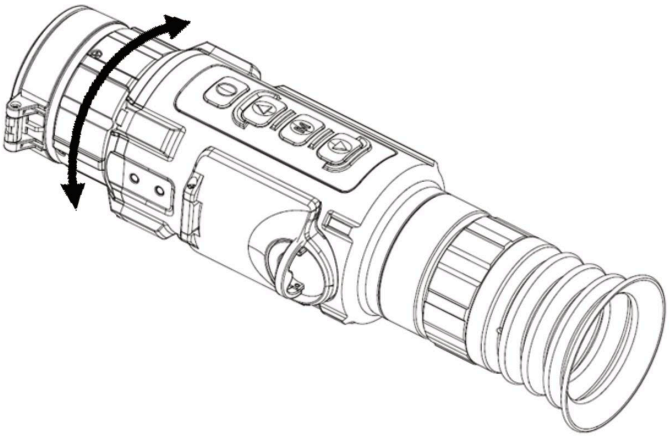

Figure 3-2 Adjust Focus

Note

When focusing, do not touch the surface of lens to avoid smearing the lens.

3.3 Adjust Brightness

In white hot mode, the higher the value of brightness is, the brighter the image is. The image effect in white hot mode is showed as picture below and effect in black hot mode is opposite.

Steps

1. Press M to go to the shortcut menu.
2. Press ▲ or ▼ to select ☼ (**Brightness**) and press M to enter the setting interface.
3. Press ▲ or ▼ to adjust brightness.
4. Hold M to save settings and exit.

Figure 3-3 Adjust Brightness in White Hot Mode

3.4 Adjust Contrast

Steps

1. Press M to go to the shortcut menu.

2. Press ▲ or ▼ to select ☼ (**Contrast**) and press M to enter the setting interface.
3. Press ▲ or ▼ to adjust image contrast.
4. Hold M to save settings and exit.

3.5 Select Scene

You can select proper scene mode according to actual using scene to improve the display effect.

Steps

1. Press M to go to the shortcut menu.
2. Press ▲ or ▼ to select **Scene Mode** and press M to enter the setting interface.
3. Press ▲ or ▼ to switch scene mode.
   - refers to city mode.
   - refers to jungle mode.
   - refers to stone mode.
   - refers to sky mode.
4. Hold M to save settings and exit.

3.6 Set Palettes

You can select different palettes to display the same scene in different effects.

Steps

1. Press M to go to the shortcut menu.
2. Press ▲ or ▼ to select (**Palettes**) and press M to enter the setting interface.
3. Press ▲ or ▼ to switch palettes.
4. Hold M to save settings and exit.

White Hot

The hot part is light-colored in view. The higher the temperature is, the lighter the color is.

Figure 3-4 White Hot Mode

Black Hot

The hot part is black-colored in view. The higher the temperature is, the darker the color is.

Figure 3-5 Black Hot Mode

Red Hot

The hot part is red-colored in view. The higher the temperature is, the redder the color is.

Figure 3-6 Red Hot Mode

IronBow

If the color is close to yellow, the temperature is high. If the color is close to purple, the temperature is low.

Figure 3-7 IronBow Mode

Color One

From high temperature to low temperature, the image is colored in from red, yellow, green, blue to purple.

Figure 3-8 Color One Mode

Color Two

From high temperature to low temperature, the image is colored in from white, yellow, red, pink to purple.

Figure 3-9 Color Two Mode

3.7 Correct Defective Pixel

The device can correct the defective pixels on the screen.

Steps

1. Hold M to go to the menu.
2. Press ▲ or ▼ to select (**DPC**), and press M to enter DPC setting interface.
3. In the DPC Interface, press M to select **Axis**, and press M to switch the moving direction of the cursor.
4. Press ▲ or ▼ to move the cursor until it reaches the defective pixel, and press M to select **Axis** to **N**.
5. Press ▲ or ▼ select **DPC**, and press M to correct the defective pixel.
6. Hold M to exit.

Note

- The selected defective pixel can be magnified and displayed at the bottom right of the interface.

Figure 3-10 DPC

- DPC is only supported in the white hot mode.

3.8 Flat Field Correction

This function can correct non-uniformity of display.

Steps

1. Hold M to go to the menu.
2. Press ▲ or ▼ to select (**FFC**), and press M to confirm.
3. Press ▲ or ▼ to switch the FFC mode.
   - Manual FFC: In the live view interface, hold ▲ to correct the non-uniformity of display.
   - Auto FFC: The device performs FFC automatically according to the set schedule when the device is turned on.
   - External FFC: Cover the lens cover, hold ▲ to correct the non-uniformity of display.
3. Hold M to save settings and exit.

3.9 Set PIP

In the live view interface, the PIP image is displayed at the up-center of the live view.

Steps

1. Press M to go to the shortcut menu.
2. Press ▲ or ▼ to select (**PIP**)
3. Press ▲ or ▼ to select whether to enable or disable PIP.
4. Hold M to save settings and exit.

Figure 3-11 Set PIP Mode

Note

- When crosshair is enabled, the PIP view is the detail of crosshair. When crosshair is not enabled, the PIP view is the detail of central part.
- If digital zoom is enabled, the PIP view also zooms. If the digital zoom ratio reaches 16, the PIP does not zoom.

3.10 Adjust Digital Zoom

You can zoom the image by using this function.

Press in the live view interface, the live view switches between 1×, 2×, 4×, 8×, and 16×.

3.11 Synchronize Time

Steps

1. Hold M to go to the menu.
2. Press or to select (**Setting**), and press M to enter the setting interface.
3. Press or to select (**Time Settings**), and press M enter the time setting interface.
4. Press or to switch time setting options, and the setting description is shown as follows:

Table 3-1 Time Setting Description

Setting Type	Setting Description
Time Display Setting	Press M to enable/disable time display on the top right of the interface.
Time Setting	Press M to switch the hour, minute, or second to be synchronized, and press or to change the hour, minute, or second selected.
Date Setting	Press M to switch the year, month, or day to be synchronized, and press or to change the year, month, or day selected.

4. Hold M to save settings and exit.

Chapter 4 Crosshair Settings

4.1 Select Crosshair Memory

If different users use the same device, the users can configure and save the crosshair settings in their respective crosshair memory group.

Before You Start

Press ▲ and M to enable crosshair in the live view interface.

Steps

Steps

1. Hold M to go to the menu.
2. Press ▲ or ▼ to select (**Crosshair Memory**), and press M to enter the setting interface.
3. Press ▲ or ▼ to switch the crosshair memory group from A to E.
4. Hold M to save settings and exit.

Note

There are 5 crosshair memory groups in total, and you can configure 7 crosshairs in each crosshair memory group.

4.2 Set Crosshair

You can select a crosshair in the crosshair memory group, and set parameters such as type, color, and position for the crosshair.

Before You Start

Press ▲ and M to enable crosshair in the live view interface.

Steps

1. Hold M to go to the menu.
2. Press ▲ or ▼ to select (**Crosshair Settings**), and press M to enter crosshair setting interface.

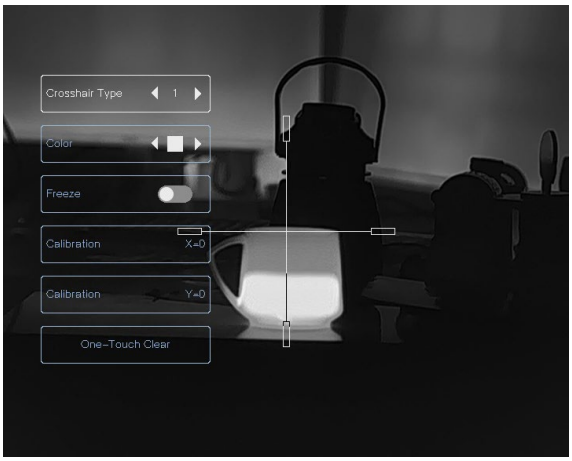

Figure 6-1 Crosshair Settings

3. Set crosshair type.
   1) In the crosshair setting interface, press ▲ or ▼ to select **Crosshair Type**.
   2) Press M to select crosshair type. 7 types of crosshairs can be selected.
4. Set the crosshair color.
   1) In the crosshair setting interface, press ▲ or ▼ to select **Color.**
   2) Press M to switch the color of the crosshair. **White**, **Green**, **Red, Black, Yellow,** and **Purple** are selectable.
5. Set the crosshair position.
   1) In the crosshair setting interface, press ▲ or ▼ to select **Calibration.**
   2) Press ▲ or ▼ to switch the X and Y axis and press M to confirm.
   3) Press ▲ or ▼ to move the crosshair until it reaches the target position. The small crosshair indicates the initial position of the crosshair.
   4) Press M to confirm.
6. (Optional) When enabling the freeze function in the crosshair interface, you can adjust the position of the cursor on a frozen image. This function can prevent image flutter.
   1) In the crosshair setting interface, press ▲ or ▼ to select **Freeze.**
   2) Press ▲ or ▼ to switch the X and Y axis and press M to confirm.
   3) Press ▲ or ▼ to move the crosshair until it reaches the target position. The small crosshair indicates the initial position of the crosshair.
   4) Press M to confirm.

Note

When you switch the crosshair type, a prompt will appear on the interface. Select **OK** to save the parameters for the current crosshair.

5)

7. Hold M to exit the interface according to the prompt.
   - **OK:** Save the parameters and exit.
   - **CANCEL:** Exit and not save the parameters.

Note

- There are 7 crosshairs can be configured in a crosshair memory group.
- If the PIP function is enabled, the aimed target can be magnified on the interface.
- If you need to reset crosshair, select **One-Touch Clear** to restore the current crosshair parameters to default.

Chapter 5 Measure Distance

The device can measure the distance between the target and the observation position.

Before You Start

When measuring the distance, keep the hand and the position steady. Otherwise, the accuracy may be affected.

Steps

1. Press M and ▼ to enter the distance measurement interface.
2. Press M to enter target setting interface to set the parameters for the target.
   1) Press ▲ or ▼ to select the target from **Deer**, **Grey Wolf**, **Brown Bear**, and **Custom**, and press M to confirm.
   2) Press ▲ or ▼ to set target height, and press M to confirm.
   3) Hold M to save settings and return to the distance measurement interface.
3. Align the center of top scale line with the edge of target top, and press M to confirm, then the top scale line flashes 3 times
4. Align the center of bottom scale line with the edge of target bottom, press M to confirm, then the bottom scale line flashes 3 times

Result

The left top of the image displays the distance measurement result and the height of the target. The results last for 5 seconds and return to live view interface.

Figure 7-1 Measurement Result

Chapter 6 Picture and Video

You can manually record video or capture picture in the live view interface.

6.1 Capture Picture

In the live view interface, press to capture picture

Note

When capturing succeeds, the image freezes for 1 second and a prompt shows on the display.
For exporting captured pictures, refer to ***Export Files***.

6.2 Record Video

Steps

1. In the live view interface, hold to start recording.

Figure 8-1 Start Recording

The left top of image displays the information of recording time.

2. Hold again to stop recording.

What to do next

For exporting recording files, refer to ***Export Files***.

6.3 Export Files

This function is used to export recorded videos and captured pictures.

Before You Start

- Turn off hotspot function.
- Turn on the device after connecting it to your PC, and keep the device on for 10 to 15 seconds before other operations.
- Remove batteries from the device before connecting to your PC, or it may cause device damage.

Steps

1. Connect the device and PC with cable.

Note

Make sure the device is turned on when connecting the cable.

2. Open computer disk and select the disk of device. Go to the **DCIM** folder and find the folder named after the capture year and month. For example, if you capture a picture or record a video in June 2022, go to **DCIM → 202206** to find the picture or video.
3. Select and copy the files to PC.
4. Disconnect the device from your PC.

Note

- The device displays images when you connect it to PC. But functions such as recording, capturing and hotspot are disabled.
- When you connect the device to PC for the first time, it installs the drive program automatically.

Chapter 7 Network Connection

Steps

1. Hold M to go to the menu.
2. Press ▲ or ▼ to select (**Wi-Fi**), and press M to enter the Wi-Fi setting interface.
3. Select **Yes** to enable Wi-Fi.
4. Turn on the WLAN of your phone and connect to the hotspot.
   - WLAN Name: Wlan-IPTS Serial No.
   - WLAN Password: Serial No.

Note

Refer to ***View Device Information*** to view the Serial No.

Chapter 8 Language Settings

You can select the device language in this function.

Steps

1. Hold M to go to the menu.
2. Press ▲ or ▼ to select ⚙ (**Setting**), and press M to enter the setting interface.
3. Press ▲ or ▼ to select 🌐 (**Language**) to enter the configuration interface.
4. Press ▲ or ▼ to select the language as required.
5. Hold M to save settings and exit.

Chapter 9 Video Output

The video output is used to view the device image on the display unit for details.

Before You Start

Connect the device to the display unit via CVBS interface of the aviation plug.

Steps

1. Hold M to go to the menu.
2. Press ▲ or ▼ to select ⚙ (**Setting**), and press M to enter the setting interface.
3. Press ▲ or ▼ to select (**Video Output**) to enter the configuration interface.
4. Press ▲ or ▼ to select **ON** to enable CVBS.
5. Hold M to save settings and exit.

Note

The CVBS cable is not included in the package, please purchase it by yourself.

Chapter 10 Maintenance

This part introduces the operation of checking device information, upgrading device, restoring to defaults, etc.

10.1 View Device Information

Steps

1. Hold M to go to the menu.
2. Press ▲ or ▼ to select ⚙ (**Setting**), and press M to enter the setting interface.
3. Press ▲ or ▼ to select ⓘ (**Version**), and press M to view the device information.
4. Hold M to exit.

10.2 Format eMMC

Before You Start

Confirm the important media file is properly kept a backup before use.

Steps

1. Hold M to go to the menu.
2. Press ▲ or ▼ to select Del (**Format**), and press M to enter the setting interface.
3. Press ▲ or ▼ to select **Yes**.
4. Hold M to format eMMC.

Note

When formatting succeeds, the image freezes for 1 second and a prompt shows on the display.

10.3 Upgrade Device

Before You Start

- Please get the upgrade package (including Main Firmware and FPGA Firmware) first.
- Make sure the hotspot function is disabled.
- Turn on the device after connecting it to your PC, and keep the device on for 10 to 15 seconds before other operations.

Steps

1. Connect the device to your PC with cable, and then turn on the device.
2. Open the detected disk, copy the upgrade file and paste it to the root directory of the device.
3. Hold to reboot the device, and the device upgrades automatically. The upgrading process will be displayed in the main interface.

Note

During the upgrade, make sure the device is connected to your PC. Otherwise, it may cause unnecessary upgrade failure, firmware damage, etc.

4. Repeat the above steps to upgrade all firmware packages one by one.

11.4 Restore Device

Steps
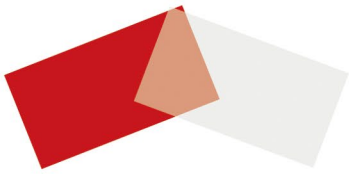
1. Hold M to go to the menu.
2. Press or to select (**Setting**), and press M to enter the setting interface.
3. Press or to select (**Restore**), and press M to confirm.
4. Press or to select **Yes**.
5. Hold M to save settings and exit. The device will restore to defaults according to the prompt.