TEST REPORT

Report Number. ..... :	90065-22-72-22-PP004	
Date of issue ..... :	Apr.14.2022	
Tested by (+signature) ..... :	Duke	Duke Chen
Approved by (+signature) ..... :	Jason	Jason gao
Testing Laboratory name ..... :	SLG-CPC Testlaboratory Co., Ltd.	
Address ..... :	No. 11, Wu Song Road, Dongcheng District, Dongguan, Guangdong Province, China 523117	
Applicant's name..... :	MAYKU LIMITED	
Address ..... :	The Biscuit Factory, Unit J410, Jam Studios, 100 Drummond Road, London, United Kingdom, SE16 4DG	
Manufacturer's name ..... :	MAYKU LIMITED	
Address ..... :	The Biscuit Factory, Unit J410, Jam Studios, 100 Drummond Road, London, United Kingdom, SE16 4DG	
Factory's name ..... :	ECO LITE ELECTRONICS Co.,Ltd	
Address ..... :	No 39, Yanhe Road, Third Industrial zone, Xiabian, Changan Town, Dongguan, China	
Standard(s) ..... :	FCC 47 CFR Part 2, Subpart J FCC 47 CFR Part 15, Subpart C	
Test item description ..... :	Multiplier	
Trade Mark ..... :	Mayku Multiplier	
Model/Type reference ..... :	MMUA22100AA, MMUA22123UK, MMUA22123EU, MMUA22123AU, MMUA22112US	
FCC ID ..... :	2A6JZMMUA221	
Date of receipt of test item ..... :	Feb.10.2022	
Date (s) of performance of test:	Feb.11.2022 to Apr.20.2022	
Summary of Test Results ..... :	**Pass**	
The Summary of Test Results based on a technical opinion belongs to the standard(s).		

General disclaimer:

This report shall not be reproduced except in full, without the written approval of SLG-CPC Testlaboratory Co., Ltd. The test results in the report only apply to the tested sample.

Address: No. 11, Wu Song Road, DongchengDistrict,Dongguan, Guangdong Province, China 523117

Tel: 86-769-22607797
Fax: 86-769-22607907
http://www.cpcteam.com

TABLE OF CONTENTS

1 EUT TECHNICAL DESCRIPTION 3

2 SUMMARY OF TEST RESULT 4

3 TEST METHODOLOGY 5

3.1 GENERAL DESCRIPTION OF APPLIED STANDARDS 5

3.2 MEASUREMENT EQUIPMENT USED 5

3.3 DESCRIPTION OF TEST MODES 6

4 FACILITIES AND ACCREDITATIONS 7

4.1 FACILITIES 7

4.2 LABORATORY ACCREDITATIONS AND LISTINGS 7

5 TEST SYSTEM UNCERTAINTY 8

6 SETUP OF EQUIPMENT UNDER TEST 9

6.1 RADIO FREQUENCY TEST SETUP 1 9

6.2 RADIO FREQUENCY TEST SETUP 2 9

6.3 CONDUCTED EMISSION TEST SETUP 11

6.4 BLOCK DIAGRAM CONFIGURATION OF TEST SYSTEM 12

6.5 SUPPORT EQUIPMENT 12

7 TEST REQUIREMENTS 13

7.1 DTS (6DB) BANDWIDTH 13

7.2 MAXIMUM CONDUCTED OUTPUT POWER 20

7.3 MAXIMUM POWER SPECTRAL DENSITY 21

7.4 UNWANTED EMISSIONS IN NON-RESTRICTED FREQUENCY BANDS 28

7.5 RADIATED SPURIOUS EMISSION 33

7.6 CONDUCTED EMISSIONS TEST 45

7.7 ANTENNA APPLICATION 48

1 EUT TECHNICAL DESCRIPTION

Characteristics	Description
Product	Multiplier
Model Number	MMUA22100AA, MMUA22123UK, MMUA22123EU, MMUA22123AU, MMUA22112US (All models are the same except the model name. Here we choose MMUA22123EU as the test prototype)
IEEE 802.11 WLAN Mode Supported	☒802.11b ☒802.11g ☒802.11n(20MHz channel bandwidth) ☒802.11n(40MHz channel bandwidth)
Modulation	DSSS with DBPSK/DQPSK/CCK for 802.11b; OFDM with BPSK/QPSK/16QAM/64QAM for 802.11g/n;
Operating Frequency Range	☒2412-2462MHz for 802.11b/g/n(HT20); ☒2422-2452MHz for 802.11n(HT40);
Number of Channels	☒11 channels for 802.11b/g/n(HT20); ☒7 Channels for 802.11n(HT40);
Transmit Power Max	20.05 dBm
Antenna:	PCB Antenna
Antenna Gain	0 dBi
Power Supply:	AC 120V/60Hz
Temperature Range:	-10°C ~ +40°C

Note: *for more details, please refer to the User's manual of the EUT.*

2 SUMMARY OF TEST RESULT

FCC Part Clause	Test Parameter	Verdict	Remark
15.247(a)(2)	DTS (6dB) Bandwidth	PASS	
15.247(b)(3)	Maximum Peak Conducted Output Power	PASS	
15.247(e)	Maximum Power Spectral Density Level	PASS	
15.247(d)	Unwanted Emission Into Non-Restricted Frequency Bands	PASS	
15.247(d) 15.209	Unwanted Emission Into Restricted Frequency Bands (conducted)	PASS	
15.247(d) 15.209	Radiated Spurious Emission	PASS	
15.207	Conducted Emission Test	PASS	
15.247(b)	Antenna Application	PASS	
	NOTE1:N/A (Not Applicable) NOTE2: According to FCC OET KDB 558074, the report use radiated measurements in the restricted frequency bands. In addition, the radiated test is also performed to ensure the emissions emanating from the device cabinet also comply with the applicable limits.		

RELATED SUBMITTAL(S) / GRANT(S):

This submittal(s) (test report) is intended for FCC ID: 2A6JZMMUA221 filing to comply with Section 15.247 of the FCC Part 15, Subpart C Rules.

3 TEST METHODOLOGY

3.1 GENERAL DESCRIPTION OF APPLIED STANDARDS

According to its specifications, the EUT must comply with the requirements of the following standards:
FCC 47 CFR Part 2, Subpart J
FCC 47 CFR Part 15, Subpart C
FCC KDB 558074 D01 15.247 Meas Guidance v05r02

3.2 MEASUREMENT EQUIPMENT USED

Equipment	Model	Manufacturer	S/N	Cal. Due
RF Connected Test				
Vector Signal Generater	Rohde & Schwarz	SMBV100B(6G)	101166	2022/07/30
Analog Signal Generator	Rohde & Schwarz	SMB100A(40G)	181333	2022/07/30
Signal Analyzer	Rohde & Schwarz	FSV40	101527	2022/05/24
Power Analyzer	Rohde & Schwarz	OSP-B157W8	N/A	2022/09/23
Wideband Radio Communication Tester	R&S	CMW270	101985	2022/07/30
Temperature&Humidity test chamber	ESPEC	VC 4018	/	2023/03/23
Wideband Radio Communication Tester	Rohde & Schwarz	CMW500	166898	2022/09/07
Radiated Emission Test				
EMI Test Receiver	KEYSIGHT	N9010A	MY56070465	2022/12/10
EMI Test Receiver	Rohde & Schwarz	FSV40	101511	2022/05/24
Bilog Antenna	Schwarzbeck	VULB 9163	01335	2023/04/28
Power Amplifier	EMEC	EM330	060676	2022/12/10
Cable	Tuyue	F4309	L-400-NmNm-12000	2022/12/10
Horn Antenna	Schwarzbeck	BBHA9120D	1779	2022/05/18
Horn Antenna	Schwarzbeck	BBHA9170	/	2022/10/09
Power Amplifier	Rohde & Schwarz	SCU-18F	180118	2022/05/17
Test Software	Farad	EZ-EMC	Ver.CPC-3A1	/
Conducted Emission Test				
LISN	Schwarzbeck	NSLK 8127	8127-892	2023/03/25
EMI Test Receiver	R&S	ESR3	102124	2022/12/10
Pulse Limiter	R&S	ESH3-Z2	357.8810.52	2022/12/10
Test Software	Farad	EZ-EMC	Ver.CPC-3A1	/

3.3 DESCRIPTION OF TEST MODES

The EUT has been tested under its typical operating condition.
The EUT configuration for testing is installed on RF field strength measurement to meet the Commissions requirement and operating in a manner which intends to maximize its emission characteristics in a continuous normal application.

The Transmitter was operated in the normal operating mode. The TX frequency was fixed which was for the purpose of the measurements.

Test of channel included the lowest and middle and highest frequency to perform the test, then record on this report.

Those data rates (☒802.11b:1 Mbps; ☒802.11g: 6 Mbps; ☒802.11n(HT20): MCS0; ☒802.11n(HT40): MCS0) were used for all test.

Pre-defined engineering program for regulatory testing used to control the EUT for staying in continuous transmitting and receiving mode is programmed.

☒Frequency and Channel list for 802.11b/g/n (HT20):

Channel	Frequency (MHz)	Channel	Frequency (MHz)	Channel	Frequency (MHz)
1	2412	6	2437	11	2462
2	2417	7	2442		
3	2422	8	2447		
4	2427	9	2452		
5	2432	10	2457		

☒Frequency and Channel list for 802.11n (HT40):

Channel	Frequency (MHz)	Channel	Frequency (MHz)	Channel	Frequency (MHz)
3	2422	6	2437	9	2452
4	2427	7	2442		
5	2432	8	2447		

☒Test Frequency and Channel for 802.11b/g/n (HT20):

Lowest Frequency		Middle Frequency		Highest Frequency	
Channel	Frequency (MHz)	Channel	Frequency (MHz)	Channel	Frequency (MHz)
1	2412	6	2437	11	2462

☒Test Frequency and channel for 802.11n (HT40):

Lowest Frequency		Middle Frequency		Highest Frequency	
Channel	Frequency (MHz)	Channel	Frequency (MHz)	Channel	Frequency (MHz)
3	2422	6	2437	9	2452

4 FACILITIES AND ACCREDITATIONS

4.1 FACILITIES

All measurement facilities used to collect the measurement data are located at

No. 11, Wu Song Road, Dongcheng District, Dongguan, Guangdong Province, China 523117
The sites are constructed in conformance with the requirements of ANSI C63.4, ANSI C63.10 and CISPR Publication 32.

4.2 LABORATORY ACCREDITATIONS AND LISTINGS

Site Description		
EMC Lab.	:	Accredited by ISED, October 04 2021 CAB identifier: CN0126 Company Number: 27767 Accredited by A2LA, October 04 2021 The Certificate Registration Number is 6325.01
Name of Firm	:	SLG-CPC Testlaboratory Co., Ltd.
Site Location	:	No. 11, Wu Song Road, Dongcheng District, Dongguan, Guangdong Province, China 523117

5 TEST SYSTEM UNCERTAINTY

The following measurement uncertainty levels have been estimated for tests performed on the apparatus:

Parameter	Uncertainty
Radio Frequency	±1x10^-5
Maximum Peak Output Power Test	±1.0%
Conducted Emissions Test	±3.08dB
Radiated Emission Test	±4.60dB
Power Density	±0.9%
Occupied Bandwidth Test	±2.3%
Band Edge Test	±1.2%
Antenna Port Emission	±3dB
Temperature	±3.2%
Humidity	±2.5%

Measurement Uncertainty for a level of Confidence of 95%

6 SETUP OF EQUIPMENT UNDER TEST

6.1 RADIO FREQUENCY TEST SETUP 1

The WLAN component's antenna ports(s) of the EUT are connected to the measurement instrument per an appropriate attenuator. The EUT is controlled by PC/software to emit the specified signals for the purpose of measurements.

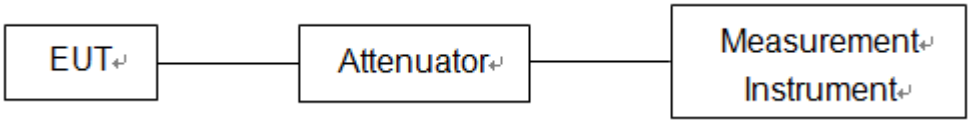

6.2 RADIO FREQUENCY TEST SETUP 2

The test site semi-anechoic chamber has met the requirement of NSA tolerance 4 dB according to the standards: ANSI C63.10. The test distance is 3m.The setup is according to the requirements in Section 13.1.4.1 of ANSI C63.10-2013 and CAN/CSA-CEI/IEC CISPR 22.

Below 30MHz：

The EUT is placed on a turntable 0.8 meters above the ground in the chamber, 3 meter away from the antenna (loop antenna). The Antenna should be positioned with its plane vertical at the specified distance from the EUT androtated about its vertical axis formaximum response at each azimuth about the EUT. The center of the loopshall be 1 m above the ground.For certain applications, the loop antennaplane may also need to be positioned horizontally at the specified distance from the EUT.

30MHz-1GHz：

The EUT is placed on a turntable 0.8 meters above the ground in the chamber, 3 meter away from the antenna. The maximal emission value is acquired by adjusting the antenna height, polarisation and turntable azimuth. Normally, the height range of antenna is 1 m to 4 m, the azimuth range of turntable is 0° to 360°, and the receive antenna has two polarizations Vertical (V) and Horizontal (H).

Above 1GHz：

The EUT is placed on a turntable 1.5 meters above the ground in the chamber, 3 meter away from the antenna. The maximal emission value is acquired by adjusting the antenna height, polarisation and turntable azimuth. Normally, the height range of antenna is 1 m to 4 m, the azimuth range of turntable is 0° to 360°, and the receive antenna has two polarizations Vertical (V) and Horizontal (H).

(a) Radiated Emission Test Set-Up, Frequency Below 30MHz

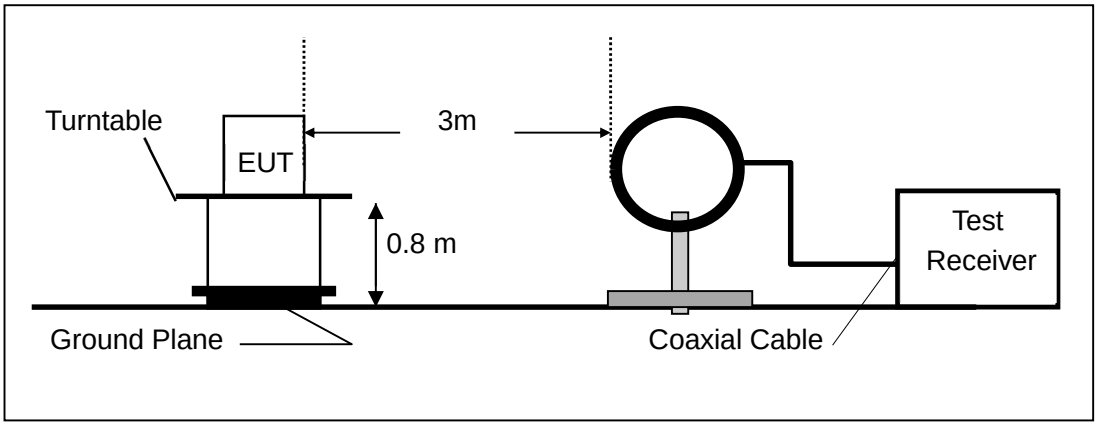

(b) Radiated Emission Test Set-Up, Frequency Below 1000MHz

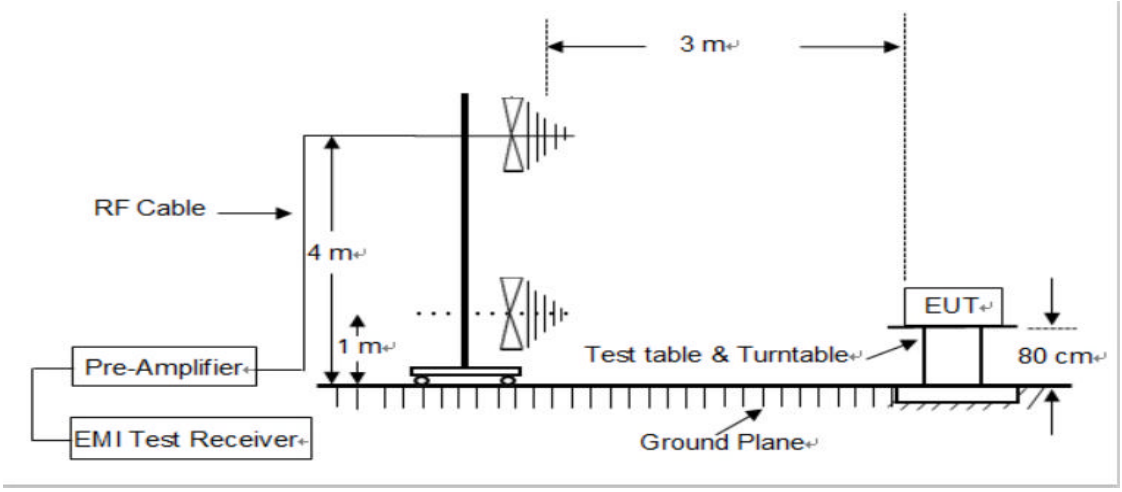

(c) Radiated Emission Test Set-Up, Frequency above 1000MHz

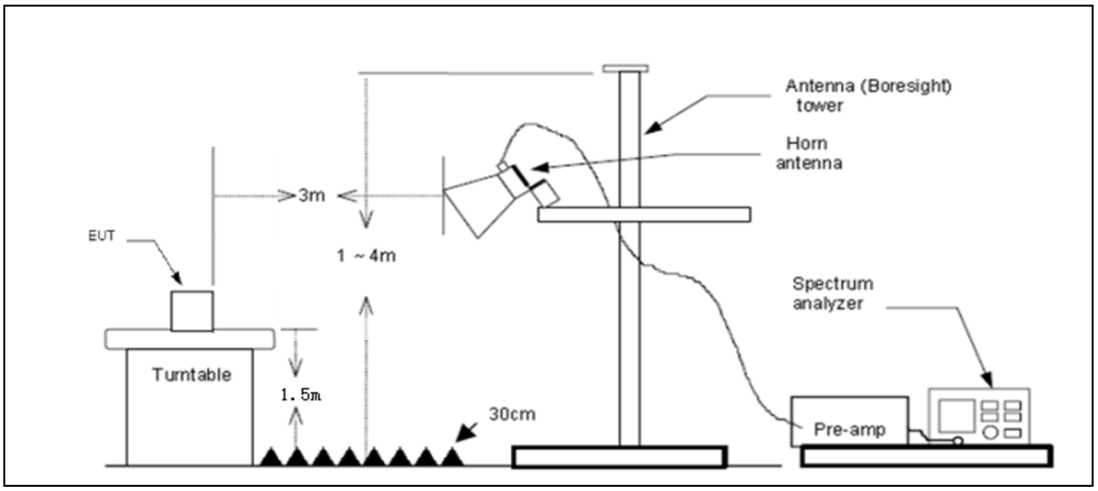

6.3 CONDUCTED EMISSION TEST SETUP

The mains cable of the EUT (maybe per AC/DC Adapter) must be connected to LISN. The LISN shall be placed 0.8 m from the boundary of EUT and bonded to a ground reference plane for LISN mounted on top of the ground reference plane. This distance is between the closest points of the LISN and the EUT. All other units of the EUT and associated equipment shall be at least 0.8m from the LISN.
Ground connections, where required for safety purposes, shall be connected to the reference ground point of the LISN and, where not otherwise provided or specified by the manufacturer, shall be of same length as the mains cable and run parallel to the mains connection at a separation distance of not more than 0.1 m.
According to the requirements in Section 13.1.4.1 of ANSI C63.10-2013 Conducted emissions from the EUT measured in the frequency range between 0.15 MHz and 30 MHz using CISPR Quasi-Peak and average detector mode.

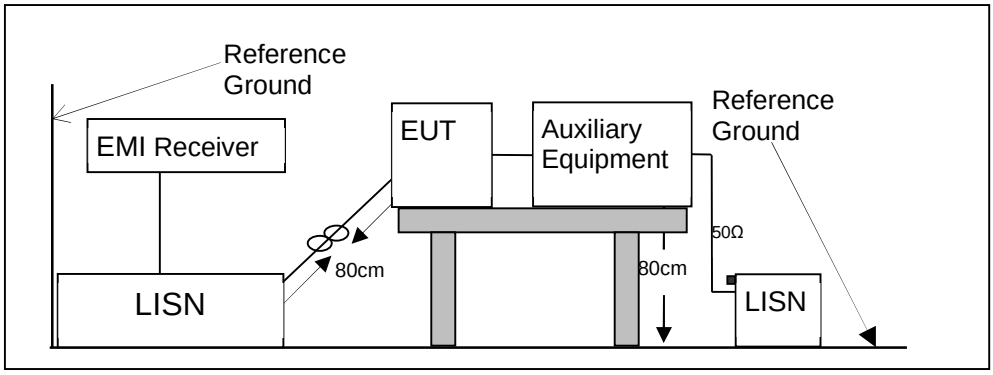

6.4 BLOCK DIAGRAM CONFIGURATION OF TEST SYSTEM

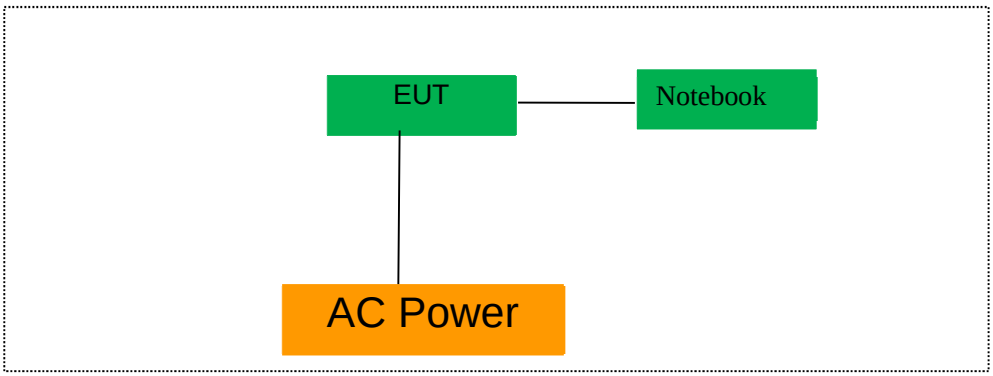

6.5 SUPPORT EQUIPMENT

EUT Cable List and Details			
Cable Description	Length (m)	Shielded/Unshielded	With / Without Ferrite

Auxiliary Cable List and Details			
Cable Description	Length (m)	Shielded/Unshielded	With / Without Ferrite
/	/	/	/

Auxiliary Equipment List and Details			
Description	Manufacturer	Model	Serial Number
Notebook	Lenovo	MPNXB1505007	MP1XHYV7

Notes:

1. *All the equipment/cables were placed in the worst-case configuration to maximize the emission during the test.*
2. *Grounding was established in accordance with the manufacturer's requirements and conditions for the intended use.*
3. *Unless otherwise denoted as EUT in『Remark』column , device(s) used in tested system is a support equipment*

7 TEST REQUIREMENTS

7.1 DTS (6DB) BANDWIDTH

7.1.1 Applicable Standard

According to FCC Part15.247 (a)(2) and KDB 558074 D01 15.247 Meas Guidance v05r02

7.1.2 Conformance Limit

The minimum -6 dB bandwidth shall be at least 500 kHz.

7.1.3 Test Configuration

Test according to clause 6.1 radio frequency test setup 1

7.1.4 Test Procedure

The EUT was operating in IEEE 802.11b/g/n mode and controlled its channel. Printed out the test result from the spectrum by hard copy function.
The RF output of EUT was connected to the spectrum analyzer by RF cable and attenuator. The path loss was compensated to the results for each measurement.
Set to the maximum power setting and enable the EUT transmit continuously
Set RBW = 100 kHz.
Set the video bandwidth (VBW) =300kHz.
Set Span=2 times OBW
Set Detector = Peak.
Set Trace mode = max hold.
Set Sweep = auto couple.
Allow the trace to stabilize.
Measure the maximum width of the emission that is constrained by the frequencies associated with the two outermost amplitude points (upper and lower frequencies) that are attenuated by 6 dB relative to the maximum level measured in the fundamental emission.
Measure and record the results in the test report.

7.1.5 Test Results

Temperature:	26° C
Relative Humidity:	54%
ATM Pressure:	1011 mbar

Operation Mode	Channel Number	Channel Frequency (MHz)	Measurement Bandwidth (MHz)	Limit (kHz)	Verdict
802.11b	1	2412	9.698	>500	PASS
	6	2437	9.607	>500	PASS
	11	2462	9.672	>500	PASS
802.11g	1	2412	16.436	>500	PASS
	6	2437	16.451	>500	PASS
	11	2462	16.412	>500	PASS
802.11n (HT20)	1	2412	16.906	>500	PASS
	6	2437	16.854	>500	PASS
	11	2462	16.932	>500	PASS
802.11n (HT40)	3	2422	31.401	>500	PASS
	6	2437	31.506	>500	PASS
	9	2452	31.604	>500	PASS

Test Model	DTS (6dB) Bandwidth 802.11b Channel 1: 2412MHz

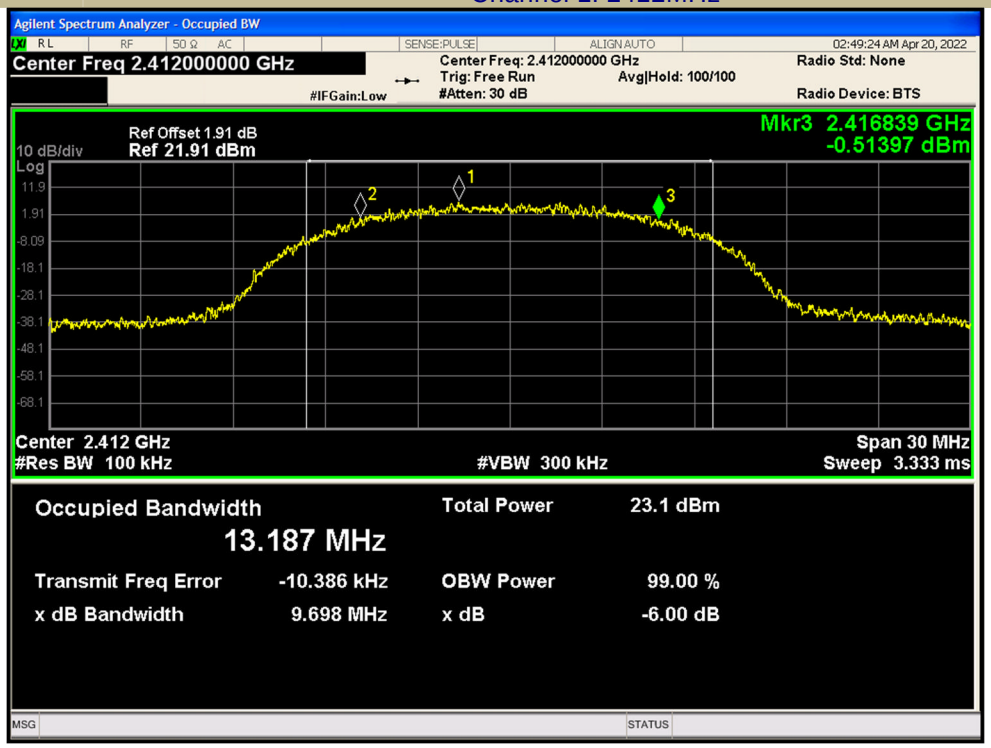

Test Model	DTS (6dB) Bandwidth 802.11b Channel 6: 2437MHz

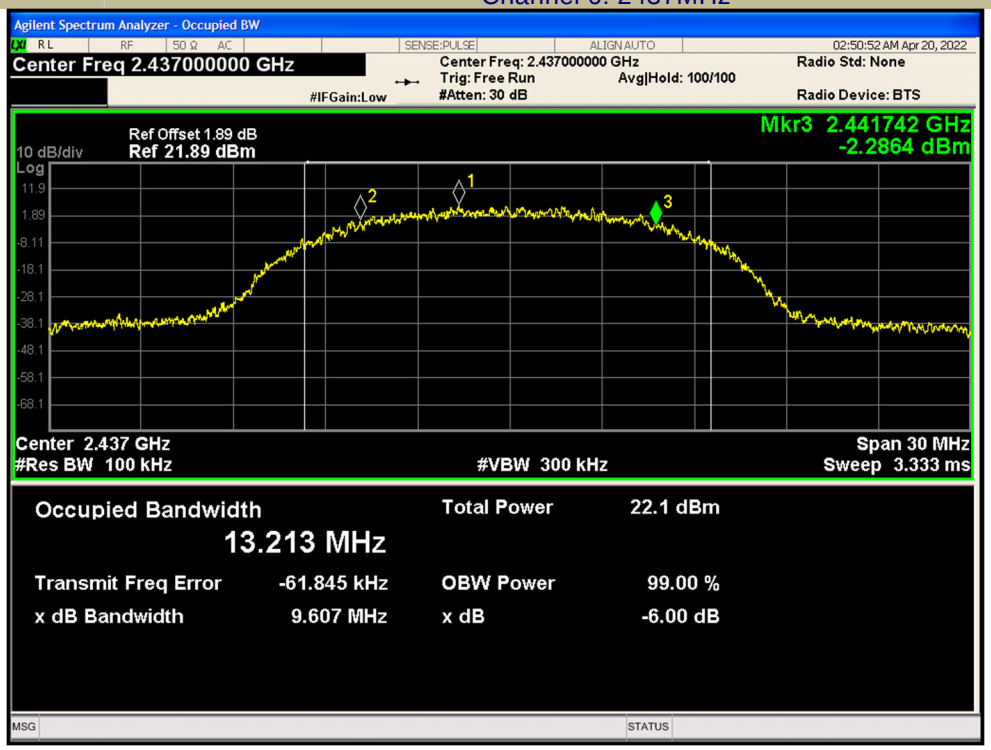

Test Model	DTS (6dB) Bandwidth 802.11b Channel 11: 2462MHz

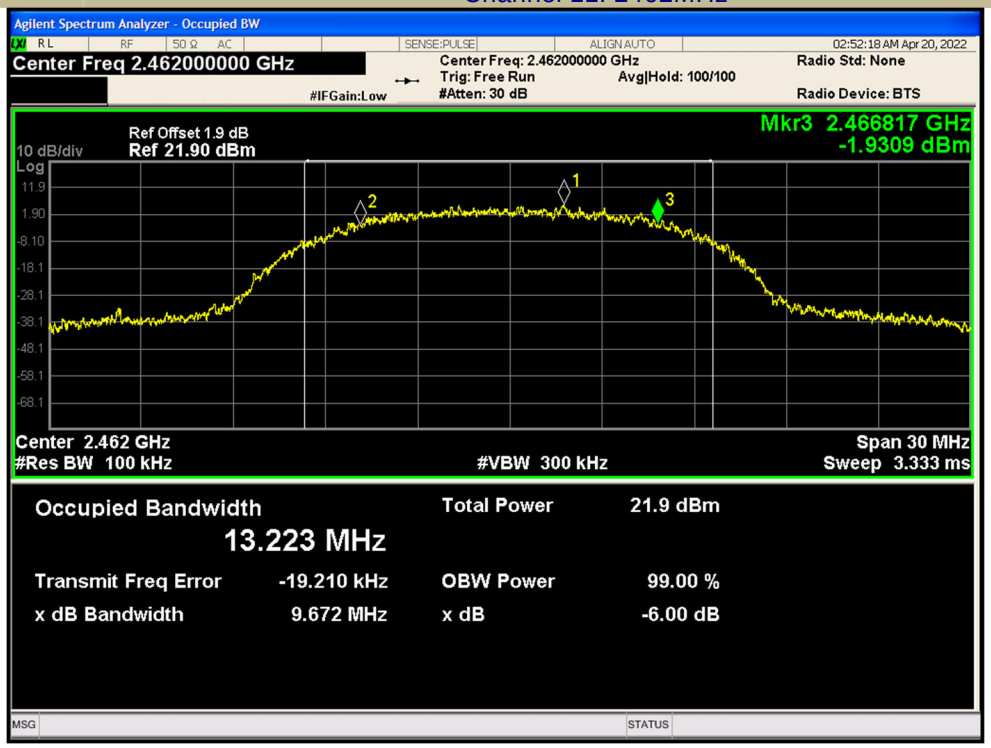

Test Model	DTS (6dB) Bandwidth 802.11g Channel 1: 2412MHz

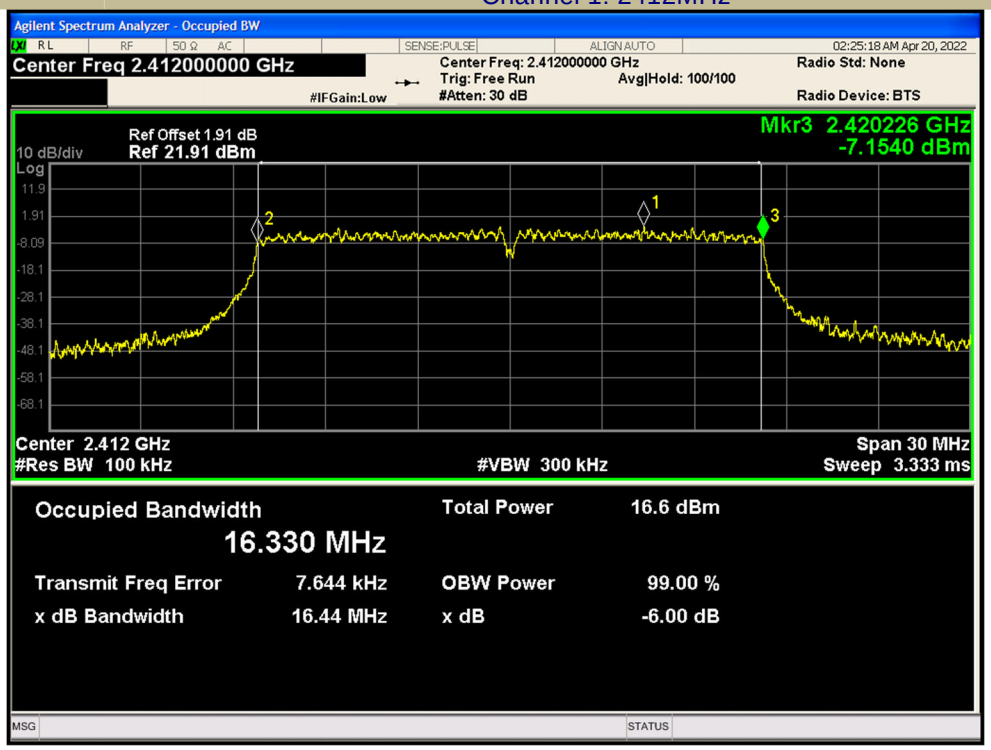

Test Model	DTS (6dB) Bandwidth 802.11g Channel 6: 2437MHz

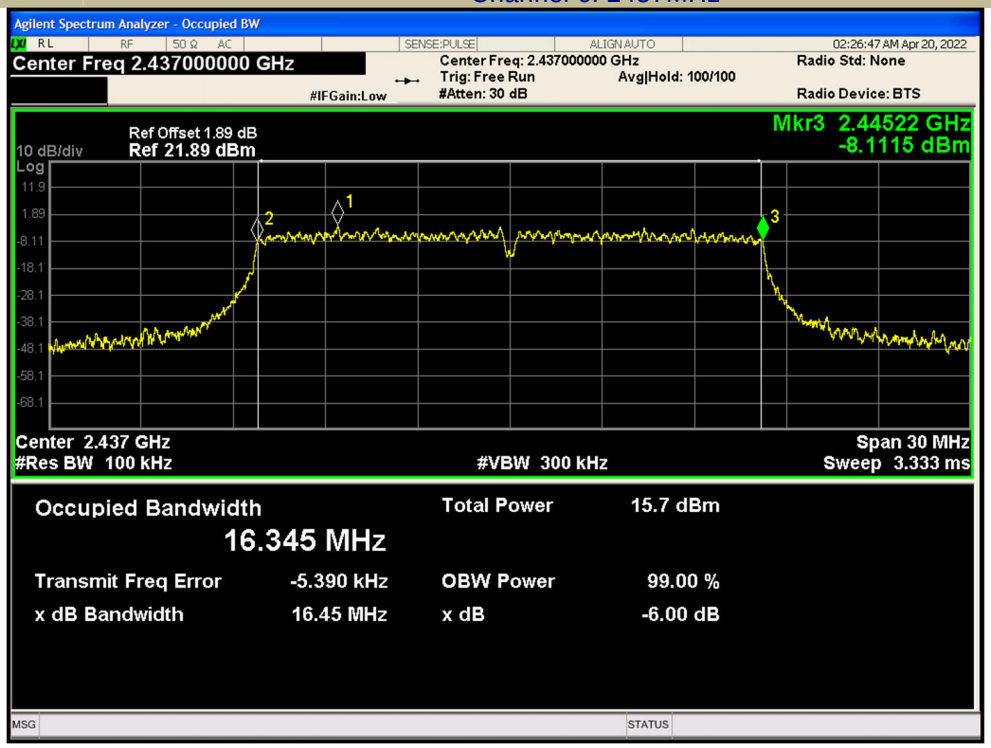

Test Model	DTS (6dB) Bandwidth 802.11g Channel 11: 2462MHz

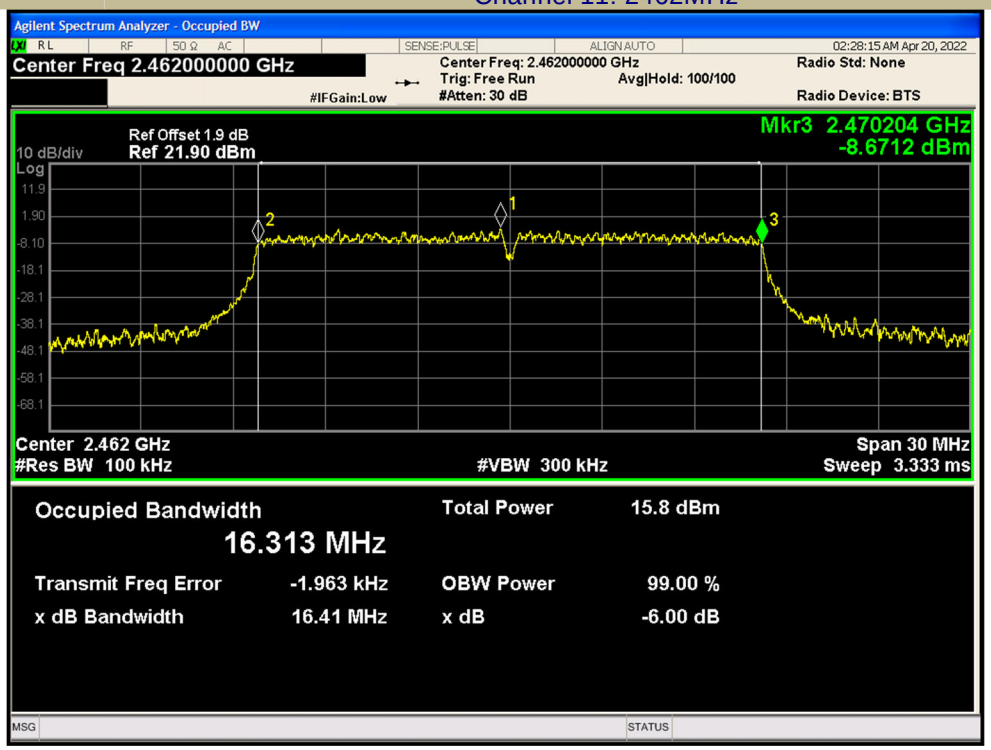

Test Model	DTS (6dB) Bandwidth 802.11n (HT20) Channel 1: 2412MHz

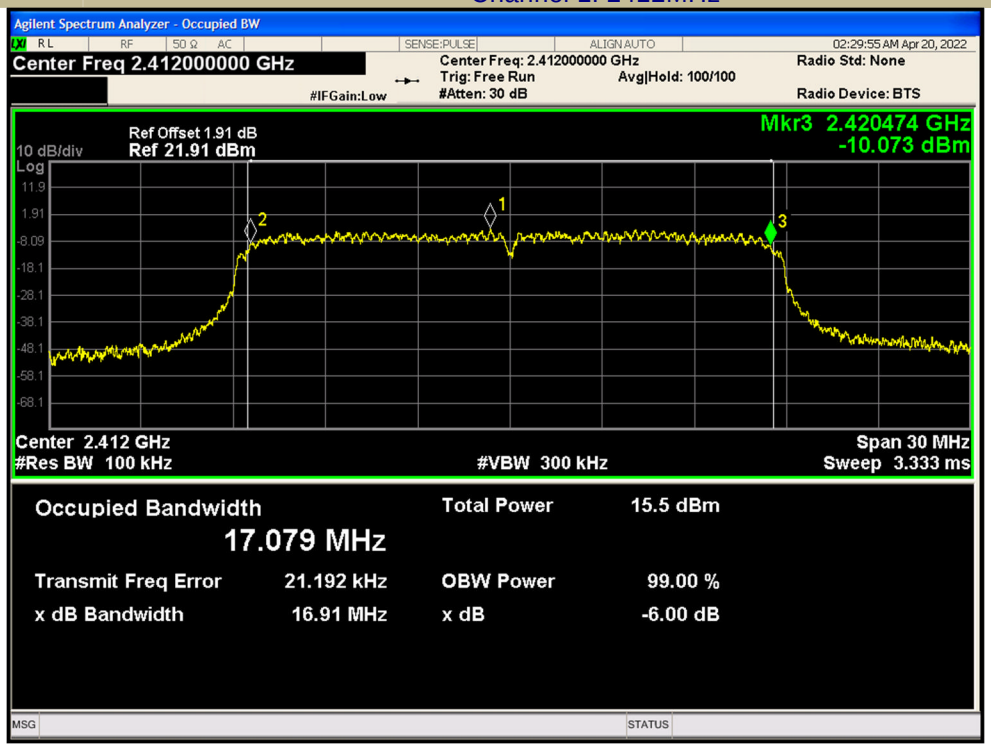

Test Model	DTS (6dB) Bandwidth 802.11n (HT20) Channel 6: 2437MHz

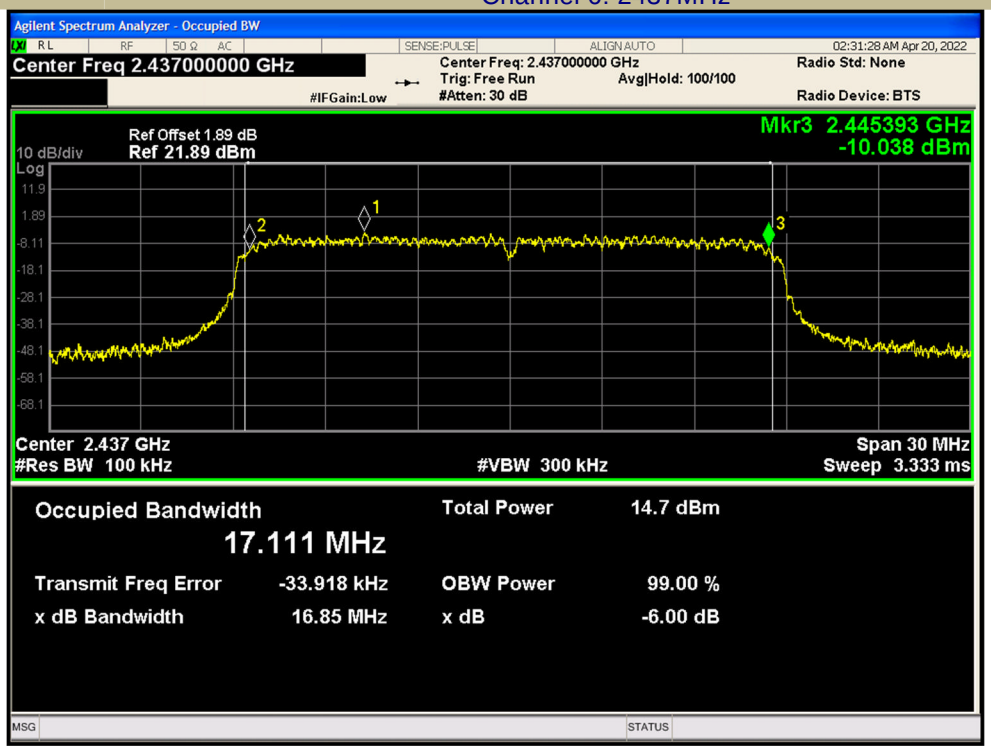

Test Model	DTS (6dB) Bandwidth 802.11n (HT20) Channel 11: 2462MHz

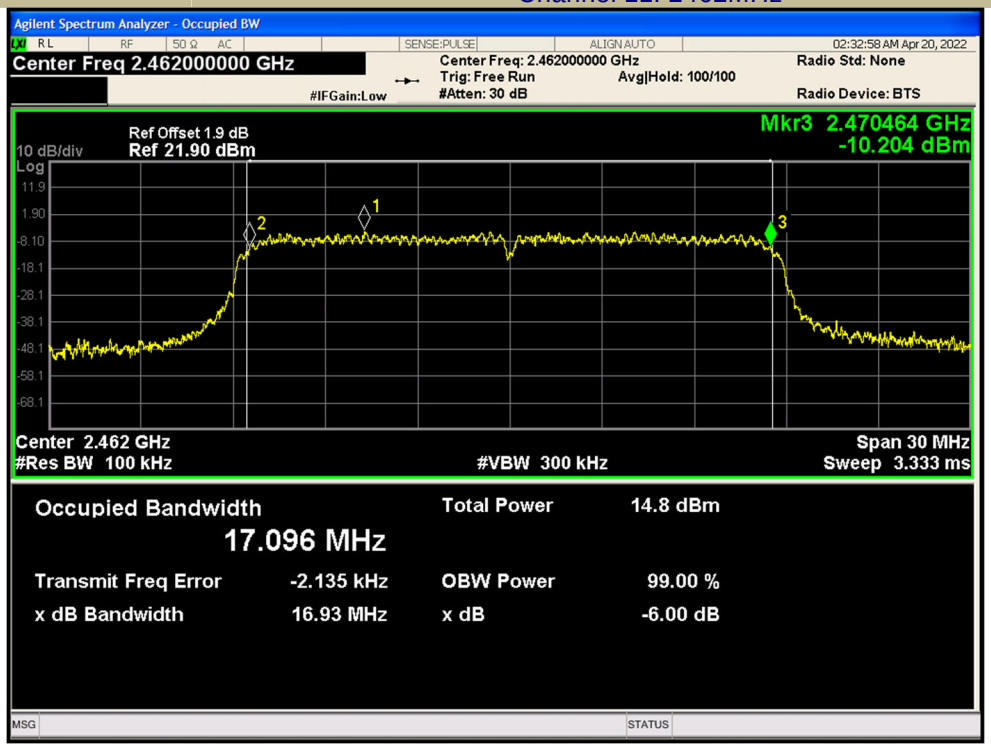
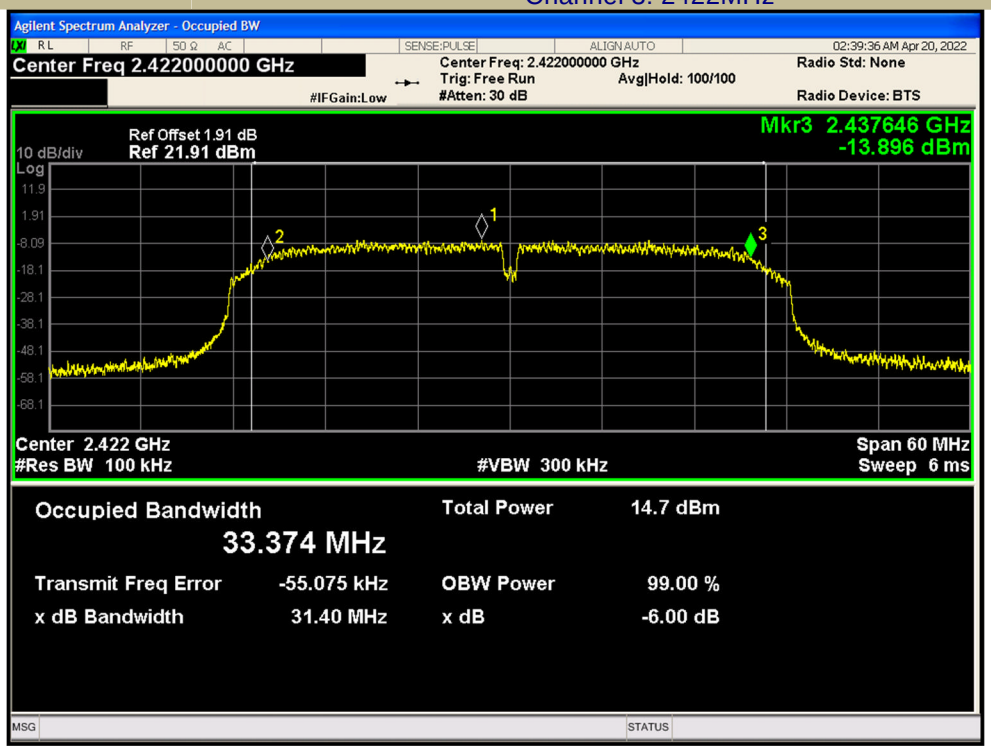
Test Model	DTS (6dB) Bandwidth 802.11n (HT40) Channel 3: 2422MHz