Installation and User Instructions

Mayku Multiplier

MMUA22100AA, MMUA22123UK, MMUA22123EU, MMUA22123AU, MMUA22112US

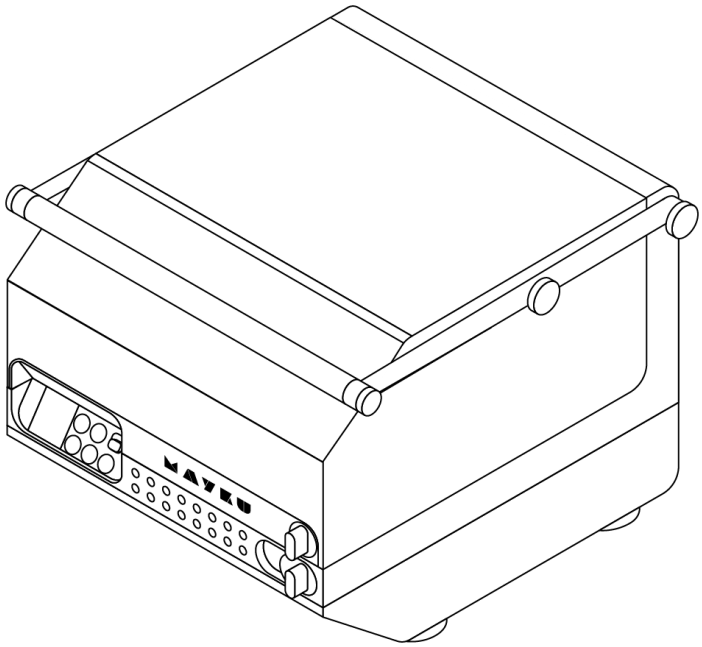

These are the original English instructions

⚠WARNING

If incorrectly used this machine may cause severe injury - please read this manual carefully before operating your machine and keep for future reference.

May 2022
Version 1.00

Mayku Limited
The Biscuit Factory, Unit J410, Jam Studios, 100 Drummond Road, London, United Kingdom, SE16 4DG.

Table of Contents

Table of Contents **1**

1 PREFACE **5**

1.1 Description of the user 5

1.2 Conventions used in this manual 5

1.3 Explanation of safety warnings 6

1.4 Retaining instructions 6

1.5 Obtaining documentation and information 7

2 DESCRIPTION OF THE MAYKU MULTIPLIER **8**

2.1 Intended use and reasonably foreseeable misuse 8

2.2 System overview 8

2.3 Technical data 9

2.4 Product Elements 11

2.5 Understanding the user interface 13

2.6 Explanation of auditory and visual signals 13

3 SAFETY INSTRUCTIONS **13**

3.1 Graphical symbols 17

3.1.1 Explanation of safety information on the product and packaging. 17

3.2 Potential health consequences 18

3.3 Personal protective equipment 18

3.4 Simplified Declaration of conformity 18

3.5 FCC Compliance Statement 18

4 PREPARATION **20**

4.1 How to transport and store the Mayku Multiplier 20

4.1.1 Dimensions and mass 20

4.1.2 Lifting, handling and transporting the product 21

4.1.3 Storing the product / Storing during intervals in normal use 22

4.2 How to install the Mayku Multiplier 22

4.2.1 Removal of the transport and packaging restraints 22

4.2.2 Unpacking the product 23

4.2.3 Packaging contents 24

4.2.4 Minimum space required 25

4.2.5 Installation of the Mayku Multiplier 26

4.2.6 Reduction of noise and vibrations 26

4.2.7 Stability of machinery 26

4.3 How to commission the Multiplier 27

4.3.1 Training of operators 27

4.3.2 Commissioning the machinery 27

5 OPERATION/USE **28**
5.1 How to use the Mayku Multiplier 28
5.1.1 Power on 28
5.1.2 Turn on 28
5.1.3 Follow on-screen instructions 29
5.1.4 Connecting to WiFi 29
5.1.5 Machine Registration 30
5.1.6 Starting/Stopping the product's operation 30
5.1.7 Checks before using the machine 31
Ensure the machine is on a level and even surface 31
Ensure both safety release valves have clearance and are not obstructed. 31
5.2 What to Do in emergency and exceptional Situations 31
6 MAINTENANCE **31**
6.1 How to maintain the machine 32
6.1.1 Cleaning and lubrication 32
6.1.2 Draining the tanks 34
6.2 How to inspect the product 34
6.2.1 Weekly inspection tasks 34
6.2.2 Monthly inspection tasks 35
7 TROUBLESHOOTING AND REPAIR **35**
7.1 How to identify and solve problems 35
7.2 Frequently Asked Questions 36
8 DISPOSAL **37**
8.1 Disposal of electronic components 37
8.2 Disposal of packaging waste 37
9 WARRANTY **38**
9.1 Exclusive Limited Warranty **38**
9.2 Exclusions from and limitation to Warranty **38**
9.3 Disclaimer of Warranties; Limitation of Liability **39**
10 TERMS **40**
10.1 Disclaimers **40**
10.2 Limitation of Liability **41**
EC/EU DECLARATION OF CONFORMITY **42**

1 PREFACE

1.1 Description of the user

These instructions are intended for the end-user of the Multiplier. The end-user can be described as each person who interacts directly with the machinery. The end-user typically includes, but is not limited to the:

- Operator
- Installer
- Maintenance personnel or technicians

Any maintenance required outside of this user manual shall be carried out by an authorised, qualified and skilled maintenance personnel.

1.2 Conventions used in this manual

Bold

Names of machinery elements, options, processes, services, and utilities Names of interface elements (such as windows, dialog boxes, buttons, fields, and menus)

Italic

Publication titles referenced in text

Emphasis (for example a new term)

Variables

1.3 Explanation of safety warnings

⚠DANGER

DANGER indicates a hazard with a high level of risk which, if not avoided, will result in death or serious injury

⚠WARNING

WARNING indicates a hazard with a medium level of risk which, if not avoided, could result in death or serious injury.

⚠CAUTION

CAUTION indicates a hazard with a low level of risk which, if not avoided, could result in minor or moderate injury.

NOTICE

NOTICE Indicates information considered important, but not hazard-related.

1.4 Retaining instructions

Read and understand this manual and its safety instructions before using this product. Failure to do so can result in serious injury or death.

Follow all the instructions. This will avoid fire, explosions, electric shocks or other hazards that may result in damage to property and/or severe or fatal injuries.

Keep all safety information and instructions for future reference and pass them on to subsequent users of the product.

The manufacturer is not liable for cases of material damage or personal injury caused by incorrect handling or non-compliance with the safety instructions. In such cases, the warranty will be voided.

1.5 Obtaining documentation and information

The latest version of the documentation is available at the following address:
mayku.me/manuals

For other questions, information, technical assistance or ordering user instructions, please contact the manufacturer:

Mayku Ltd
The Biscuit Factory
Unit J410
Jam Studios
100 Drummond Road
London
United Kingdom
SE16 4DG

Website: https://www.mayku.me/
Contact: support@mayku.me

2 DESCRIPTION OF THE MAYKU MULTIPLIER

2.1 Intended use and reasonably foreseeable misuse

The Multiplier is intended to be used as a desktop pressure forming machine, for making high detail molds from suitable templates for a range of applications.

The Multiplier is intended for indoor use in a well ventilated area only.

Unintended uses:

- The machinery shall only be used for applications as described by the manufacturer. All other applications are unprofessional and considered dangerous. The manufacturer cannot be held liable for damage resulting from errors, unintended or unprofessional use of the machinery.
- This machinery is not intended for use by persons (including unsupervised children) with restricted physical, sensory or intellectual capability or lack of experience and/or knowledge.
- Only use the machinery within the specified performance limits as described in these instructions.
- An external compressor shall not be connected to this machine under any circumstances. This may result in injury or death.

The Multiplier shall only be used in accordance with the instructions described in this installation and user manual. Any use other than those described in these documents is considered as unintended use. Unintended use will invalidate the warranty.

2.2 System overview

The Multiplier is loaded with sheets of thermoplastic which are locked into the machine and heated past their glass transition temperature using an infrared heating element. Once at the required temperature the lid is locked, and up to 60 PSI of pressure is applied into the dome and to the sheet. This pressure is generated by a compressor which stores air inside internal tanks. The pressure is then vented through a silencer and the sheet is left to cool before removal.

2.3 Technical data

Parameter	Unit
Device name	Mayku Multiplier
Designation	Pressure Former
Type	Thermoforming Machine
Technical life span	10 Years
Input	110-240V, 12A/6A (Single Phase)
Maximum Pressure	4.1 bar/60 psi (Dome), 12 Bar/175 psi (Tank)
Max Power	1500W
Weight	Unboxed: 57kg (125lbs) | Boxed: 67.5kg (149lbs)
Frequency band	2.4GHz
Maximum radio-frequency power transmitted in the frequency band(s) in which the radio equipment operates	20.05dBm
The A-weighted emission sound pressure level at workstations, exceeds 70 dB(A) but does not exceed 80 dB(A) - about 78 dB(A), uncertainty is 3dB(A). The measurement was performed under normal operation at the point of 1m away from the machine and height 1.6m away from the operator standing on the floor wearing ear protection.	

Operation and storage temperature range	+5 to +40°C
Relative humidity	0 to 85%
FCC ID	2A6JZMMUA221
Software version	1.0

2.4 Product Elements

Front:

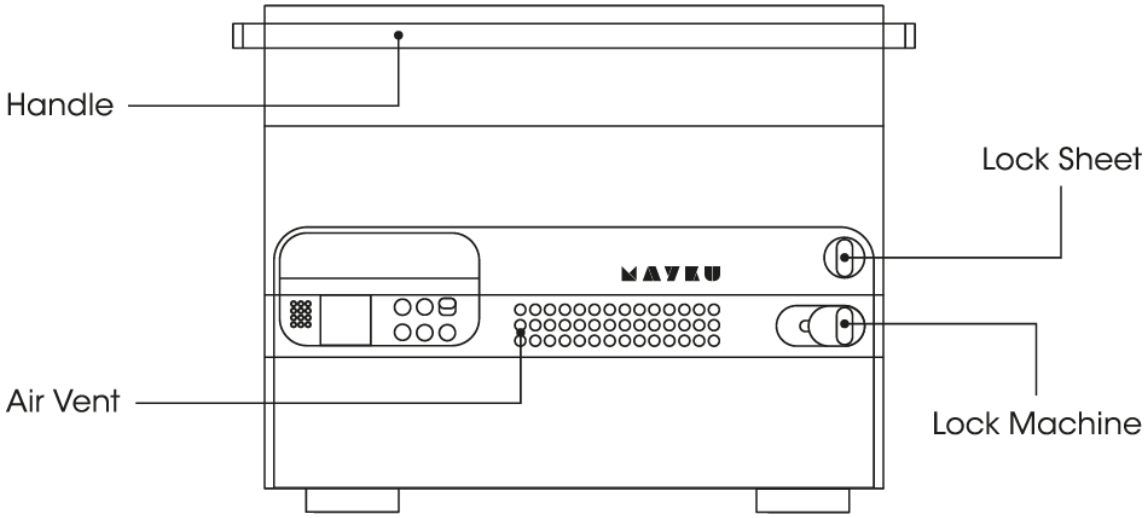

Back:

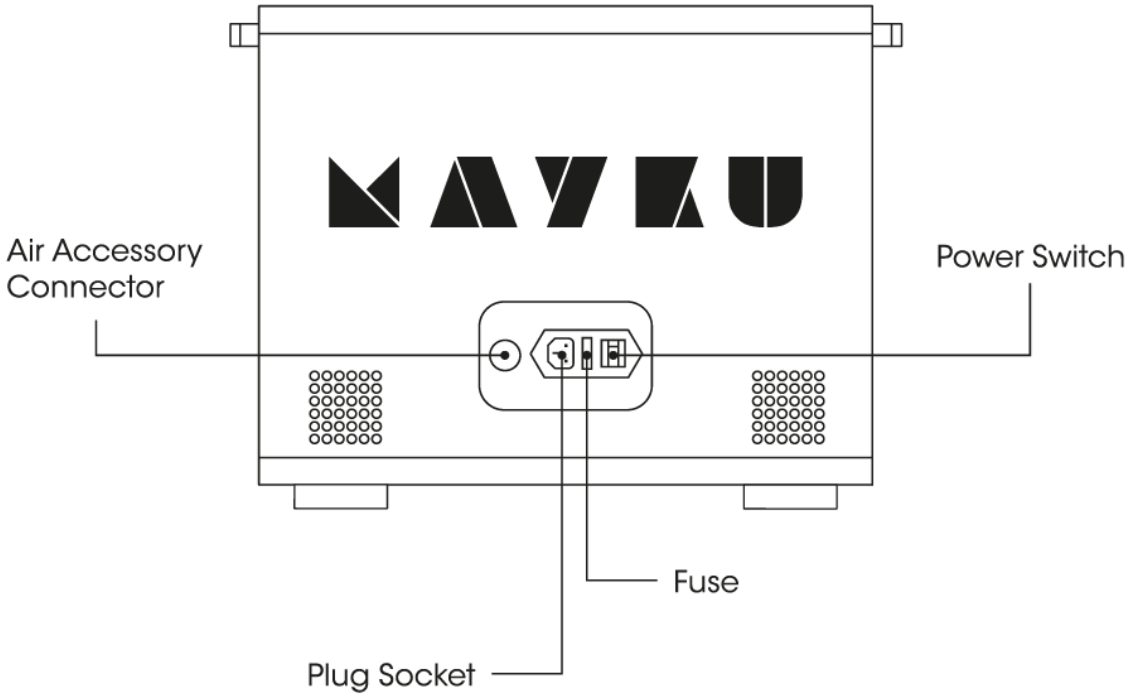

Internal:

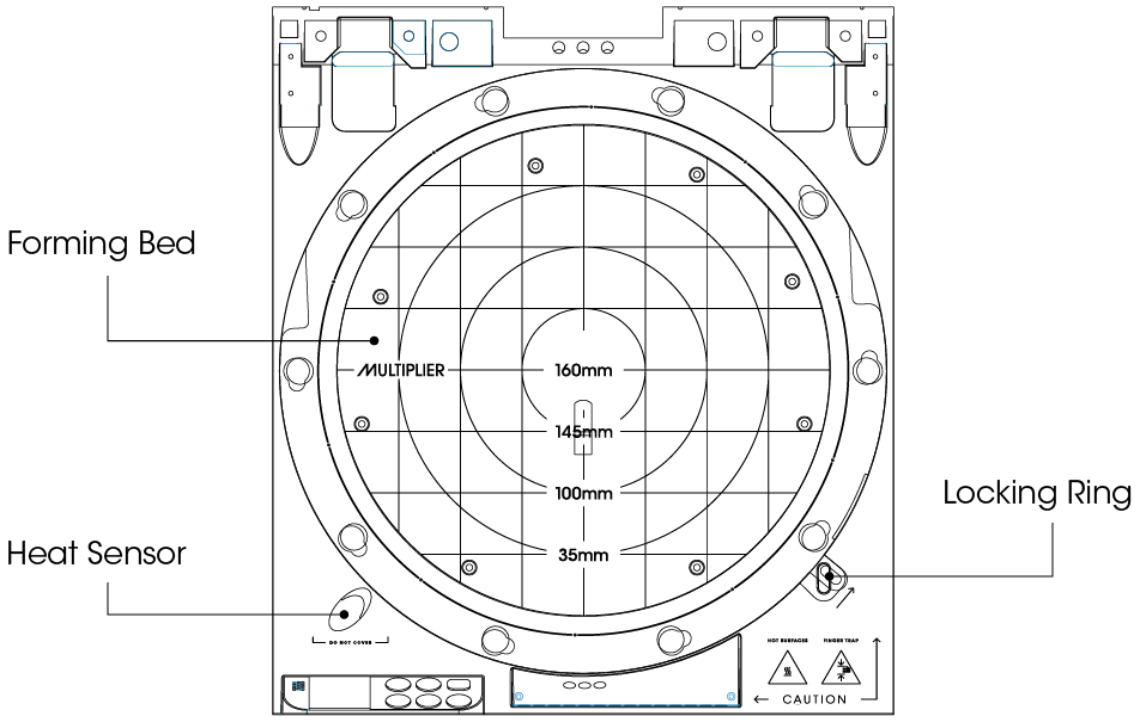

Base:

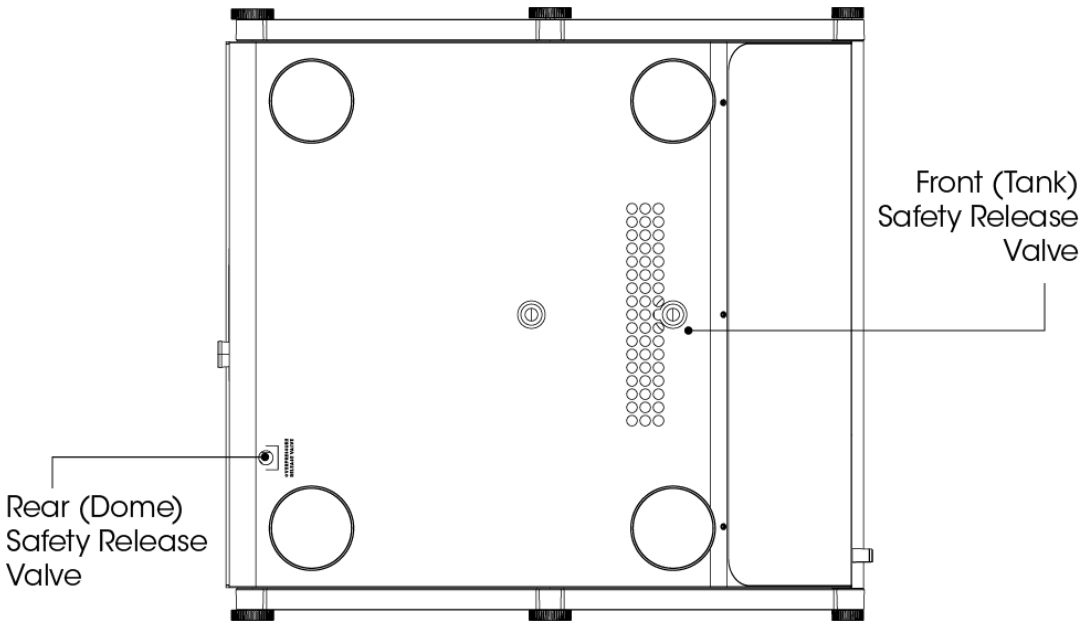

2.5 Understanding the user interface

Control Panel:

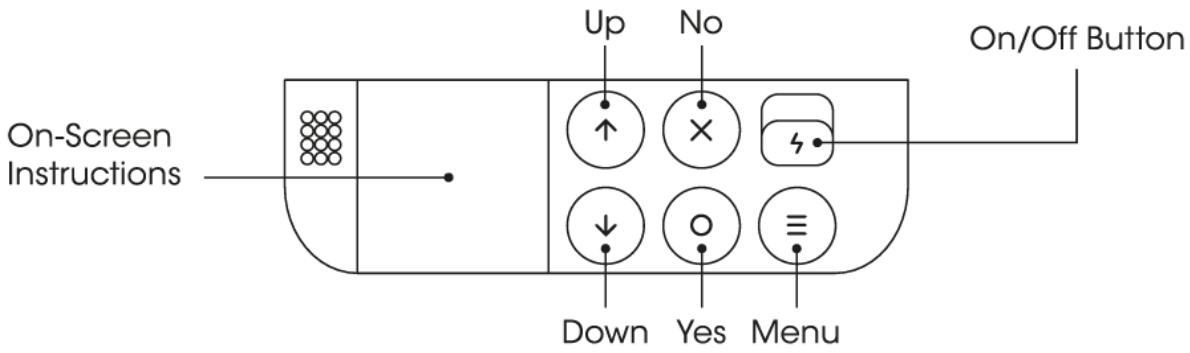

2.6 Explanation of auditory and visual signals

The Multiplier uses on-screen commands and auditory beeps to convey instructions.
The Mayku logo lights up when the machine is turned on.

3 SAFETY INSTRUCTIONS

Read this important information carefully before you use the Mayku Multiplier, and keep it for future reference. Failure to follow all the instructions listed may result in electric shock, fire or serious personal injury. Mayku accepts no responsibility for injury to yourself or others, or damage to property or the Multiplier, nor will the warranty apply should the Mayku Multiplier and related materials be used inappropriately or if the instructions are not followed correctly.

⚠DANGER

- Before plugging the Mayku Multiplier into the mains electrical supply, check that the voltage and power supply comply with the specifications indicated on the rating plate of the appliance. You will find this information on the sticker on the back of the machine.
- The heaters inside the dome of the Mayku Multiplier can become extremely hot under operation and may cause serious burns. Do not touch under operation.
- When a sheet has been formed in the Mayku Multiplier, it will remain hot for a period of time. Do not touch the sheets until they have cooled.
- The Mayku Multiplier melts plastic sheets and other materials which may emit fumes and odours under normal circumstances and if overheated. Always use the Mayku Multiplier in a well ventilated area.
- Never cover the ventilation holes on the top, back or underneath of the Mayku Multiplier.
- The Multiplier shall not be submerged in water, as any contact with the electrical parts would create the risk of malfunction and electric shock.
- To prevent the risk of electrical shock, do not immerse the power cord, plug, or any non-removable parts of the Multiplier in water or any other liquid.
- Never allow any liquid or powders to get onto or inside of the Multiplier.
- Do not use the Multiplier with wet hands.
- Do not orientate or operate the Multiplier upside down or on its side.
- Disassembly of the Multiplier should only be performed by a certified Mayku repair specialist.
- The use of attachments, not specifically recommended by the manufacturer, shall not be used as they may cause personal injury or damage to the Multiplier.
- Do not replace any part of the Multiplier with a third-party component.
- Mayku will not be responsible for any damage, injury or malfunction caused by using a third party sheet material inside of the Multiplier.
- Do not use any flammable or potentially explosive materials in conjunction with the Multiplier either as sheets or templates.
- Beware of crushing objects and body parts when operating the Multiplier.
- Do not attempt to insert body parts or any living things inside the Multiplier.

⚠WARNING

- Always place the Multiplier on a stable, flat, heat-resistant surface. Also ensure that the surface can take the weight of the Multiplier during use.
- Do not use the Multiplier if the plug, the mains cord or the machine itself shows physical damage, or if the machine functions abnormally in any way, or if the machine has been dropped or has been exposed to water or other liquid.
- Do not let the Multiplier mains cord come into contact with the heater in the top of the machine when the heater is switched on or cooling down.
- Do not move or lift the Multiplier while it is operating or while it is connected to an electrical socket.
- Do not move the Multiplier until it is completely cool.
- Do not leave the Multiplier unattended when in use.
- The Multiplier is not intended for use by persons (including children) with reduced physical, sensory or mental capabilities, or lack of experience and knowledge, unless they have been given supervision or instructions concerning use of the appliance by a person responsible for their safety.
- This Multiplier can be used by children aged from 12 years and above if they have been
- given supervision or instruction concerning use of the appliance in a safe way and understand the hazards involved and are accompanied by a responsible adult.
- Cleaning and user maintenance of the Multiplier shall not be made by children unless they are older than 12 and supervised by a responsible adult.
- Always maintain your Multiplier correctly, clear out any air filters and remove any excess moisture either every 6 months or when indicated by the machine.
- Do not allow children to interact with the Multiplier unattended.
- Keep the Multiplier and its mains cord out of reach of animals and children less than 12 years old when the machine is switched on or cooling down.
- Children under 12 should not use the Multiplier at all.
- Do not use the Multiplier under the influence of any intoxicating substances.
- Do not use the Multiplier outdoors or in busy public areas.

⚠CAUTION

- Objects placed on the Multiplier bed may get hot.
- Regularly check the Multiplier power cord carefully for damage.
- Fully unwind the Multiplier mains cord before you plug it in the wall socket.
- Do not allow the Multiplier power cord to hang over sharp table edges or come into contact with hot surfaces.
- Make sure that the Multiplier is switched off and remove the plug from the mains electrical supply when it is not in use, before it is cleaned and while it is being repaired.
- Do not pull on the Multiplier power cord at any time.
- Do not use non-certified Mayku sheets and materials with your Multiplier.
- Only use Mayku branded air accessories with the Multiplier.
- Mayku are not responsible for the use of any experimental and potentially damaging materials used as sheets or templates in the Multiplier.
- Keep the plate of your Multiplier clean by removing and washing in warm, soapy water.
- Keep your Multiplier clean by wiping down with a damp, non-abrasive cloth.
- Keep the bearings of your Multiplier lifting mechanism well maintained by applying lubricating oil regularly to avoid wear.
- If handing the Multiplier over to a third party, ensure that this safety instruction manual is supplied with the product.

3.1 Graphical symbols

3.1.1 Explanation of safety information on the product and packaging.

Symbol	Meaning
CE	CE Marking
UK CA	UKCA Marking
FC	FCC Marking
	RCM Marking
	Warning, risk of crushing fingers.
	Warning, hot surface
	Warning, possibility of electric shock

3.2 Potential health consequences

⚠CAUTION

The Multiplier should be operated indoors only.
The area shall be well ventilated, as some plastics used may off-gas during the heating process, and a build-up of these fumes may be harmful.

3.3 Personal protective equipment

Always use appropriate personal protective equipment when working with the Multiplier:

- Heat resistant gloves (category 2) - *when removing hot molds or sheets*
- Hearing protection - *for tank venting during maintenance*

3.4 Simplified Declaration of conformity

Hereby, Mayku ltd declares that the radio equipment type Mayku Multiplier MMUA22100AA is in compliance with Directive 2014/53/EU. The full text of the EU declaration of conformity is available at the following internet address: mayku.me/compliance

3.5 FCC Compliance Statement

This device complies with Part 15 of the FCC Rules. Operation is subject to the following two conditions:
1. this device may not cause harmful interference, and
2. this device shall accept any interference received, including interference that may cause undesired operation.

NOTICE

This equipment has been tested and found to comply with the limits for a Class B digital device, pursuant to Part 15 of the FCC Rules. These limits are designed to provide reasonable protection against harmful interference in a residential installation. This equipment generates, uses and can radiate radio frequency energy and, if not installed and used in accordance with the instructions, may cause harmful interference to radio communications.

However, there is no guarantee that interference will not occur in a particular installation. If this equipment does cause harmful interference to radio or television reception, which can be

determined by turning the equipment off and on, the user is encouraged to try to correct the interference by one or more of the following measures:

- Reorient or relocate the receiving antenna.
- Increase the separation between the equipment and receiver.
- Connect the equipment into an outlet on a circuit different from that to which the receiver is connected.
- Consult the dealer or an experienced radio/TV technician for help.
- This equipment complies with FCC radiation exposure limits set forth for an uncontrolled environment. This equipment should be installed and operated with a minimum distance 20cm between the radiator & your body.

⚠WARNING

Changes or modifications to this unit not expressly approved by the party responsible for compliance could void the user's authority to operate the equipment.

4 PREPARATION

4.1 How to transport and store the Mayku Multiplier

⚠WARNING

Ensure that the Multiplier is on a stable surface before use.
Moving the Multiplier during use is dangerous and may result in injury or death.

4.1.1 Dimensions and mass

Unboxed
Dimensions: 585mm (L) x 515mm (W) x 420mm (H).
Weight: 57kg (125lbs)

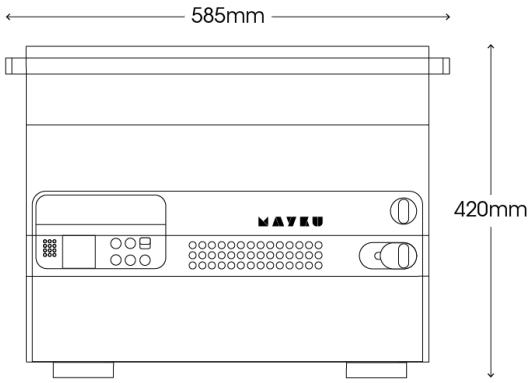

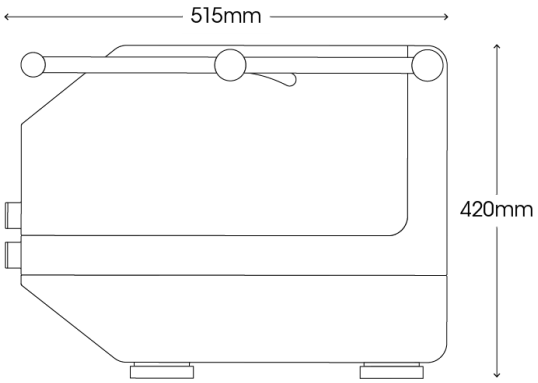

Boxed
Dimensions: 700mm (L) x 700mm (W) x 640mm (H).
Weight: 67.5kg (149lbs)

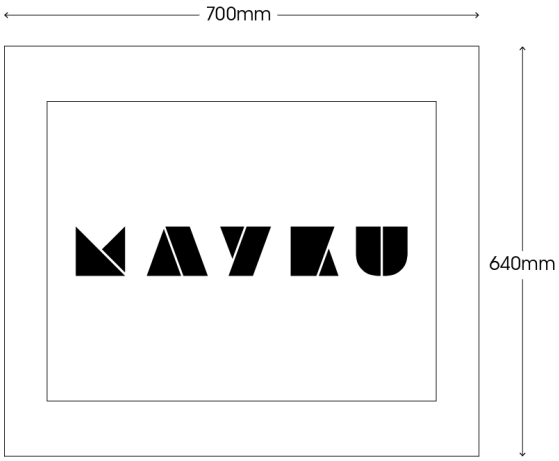

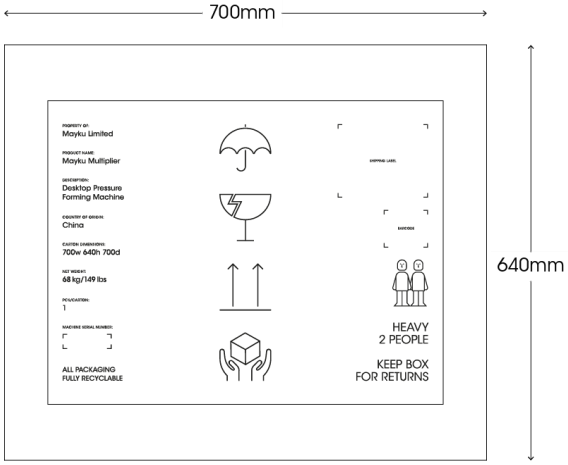

4.1.2 Lifting, handling and transporting the product

To lift and handle the product safely:

1. Make sure that your path is clear from obstacles. Make sure that surfaces are not wet or slick.
2. Wear proper protective shoes and gloves
3. Make sure that the machine is closed and both locks are set to the “locked” position.
4. Use the top handle or hold the base to lift the machine. **WARNING!** Always carry out lifting with more than one person.
5. Put the machine in the correct location. ***NOTICE*** Make sure that both safety release valves are not blocked when putting down the machine.

⚠WARNING

The Multiplier shall be placed on a surface that is rated to the weight of the machine. (57KG, 125lbs)

To transport the product safely:

1. The Multiplier should be shipped in the box included with the machine, ensuring padding on either side and front/back of the machine.
2. The packaged machine shall be strapped in transit to avoid excess movement.

4.1.3 Storing the product / Storing during intervals in normal use

To store the product safely:

1. The machine shall be used and stored on a strong and stable surface.
2. Ensure the machine is stored in the closed position at all times.

4.2 How to install the Mayku Multiplier

⚠WARNING

The Multiplier is a heavy machine, and requires a minimum of (2) people to lift. Do not attempt to lift the machine by yourself.

4.2.1 Removal of the transport and packaging restraints

The Multiplier is shipped in a reinforced cardboard box strapped to a pallet.
Follow these instructions to remove transportation materials:

1. Cut the plastic shipping straps using a knife or scissors
2. Remove the cardboard lid
3. Slide the cardboard shipping box upwards over the machine.

NOTICE

Packaging materials should be kept for future transportation purposes.

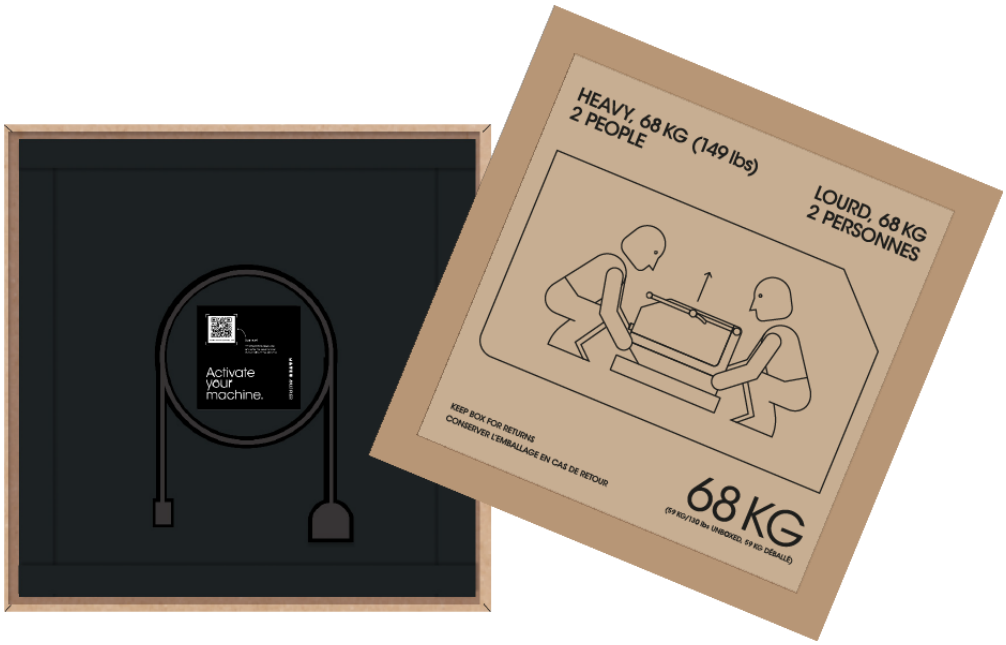

4.2.2 Unpacking the product

Once the cardboard lid and shipping box have been removed follow these steps:

1. Remove the quick start guide, user manual and tool kit from the foam lid.
2. Lift off the foam lid
3. Remove the four foam side panels
4. Remove the angled foam blocks
5. Follow the lifting instructions in **4.1.2**
   The machine shall be positioned on a strong and stable surface.

NOTICE

Packaging materials should be kept for future transportation purposes.

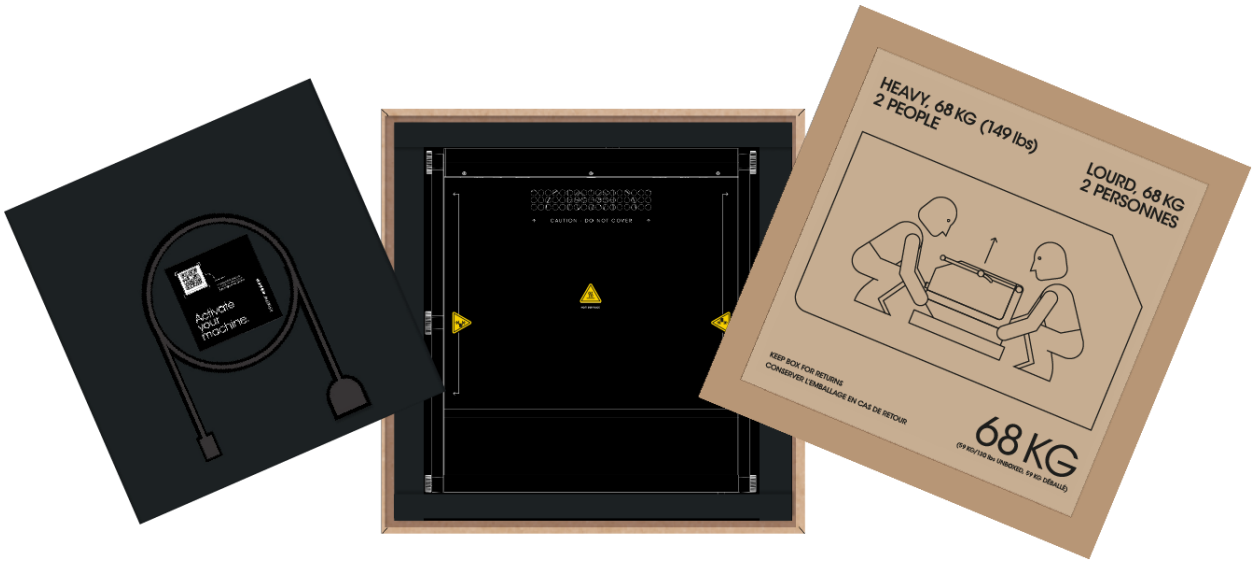

4.2.3 Packaging contents

Your delivery will contain the following items:

A. Multiplier machine (One)
B. Mains cable (One)
C. Quick start guide
D. Instruction manual
E. Set of maintenance tools
   a. Allen keys (Two)
   b. Cleaning cloth (One)

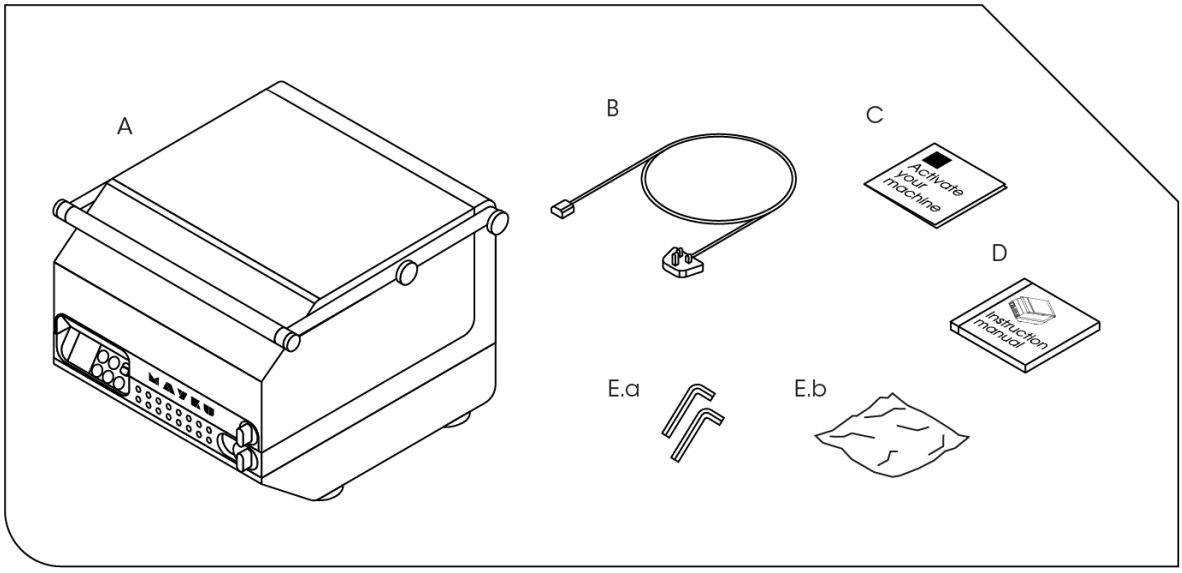

4.2.4 Minimum space required

The machine dimensions are:
585mm (H) x 515mm (W) x 420mm (H)

⚠CAUTION

A minimum of 150mm is required behind the machine to allow for cables and other accessories.

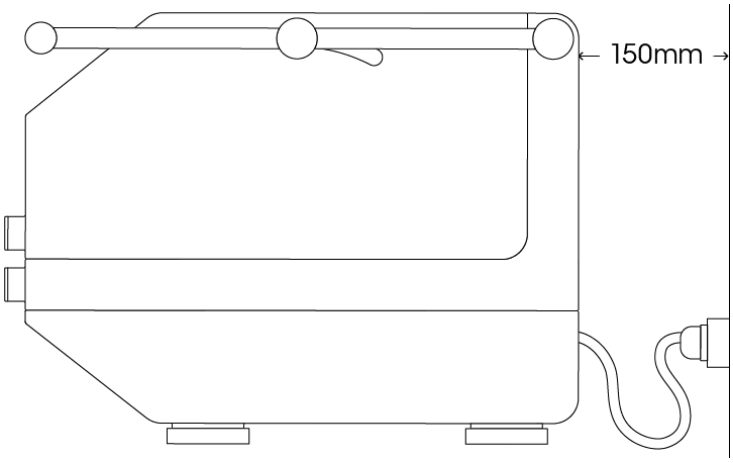

4.2.5 Installation of the Mayku Multiplier

⚠CAUTION

Ensure that both safety release valves (located on the bottom of the machine) are not blocked during positioning.

No tools are required for installation

To install the Mayku Multiplier:

1. Once the machine is in its final position check to ensure there is 150mm of space behind the machine, and the safety release valves on the base are not blocked.
2. Plug the machine in, ensuring that it is connected to an outlet that is between 110-240V and can handle the rated current depending on the region (12A 110V, 6A 240V).

4.2.6 Reduction of noise and vibrations

To reduce noise and vibrations:

1. Ensure the Multiplier is placed on a level and even surface.
2. Ensure the work surface is of solid construction.

4.2.7 Stability of machinery

To ensure the stability of machinery:

1. Ensure the Multiplier is on a surface that is rated for the weight of the machine.
2. All four feet shall be fully on the surface

4.3 How to commission the Multiplier

4.3.1 Training of operators

It is the responsibility of the individual / company to ensure all operators of the Multiplier have read and agree to all sections of this user manual.

4.3.2 Commissioning the machinery

Regular maintenance should be carried out to ensure smooth and safe operation of the Multiplier. Maintenance can be found by going to **Menu > Maintenance** on the machine. Employers shall conduct a risk assessment and national requirement to inform employees on hazards. Mayku will not be held liable for any injuries caused by an unsafe work environment due to not following these procedures.

5 OPERATION/USE

5.1 How to use the Mayku Multiplier

5.1.1 Power on

Make sure that the mains cable is connected to the machine, and turn the power switch to the ON position.

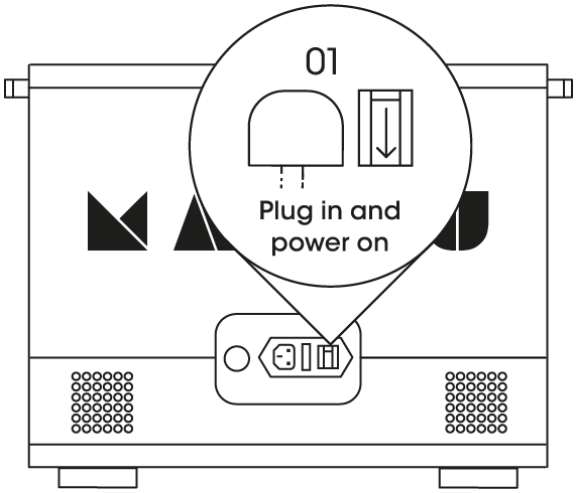

5.1.2 Turn on

Push the on/off button to the ON position to power up the machine.

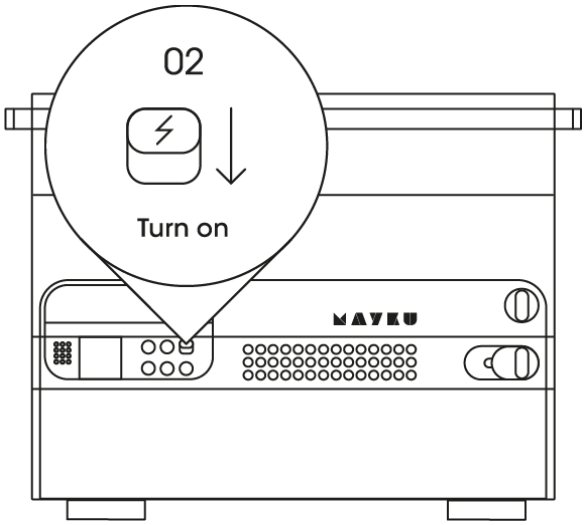

5.1.3 Follow on-screen instructions

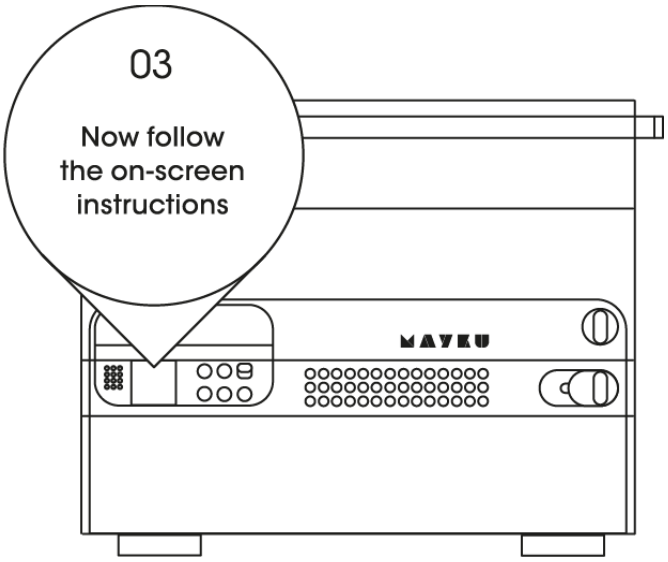

For further guidance on using the Multiplier, please visit: **platform.mayku.me**

5.1.4 Connecting to WiFi

The Multiplier can be updated wirelessly over WiFi. This means we can add new material profiles, new functions and new accessories to your machine over time.

For more information on connectivity, please visit: **mayku.me/compliance**

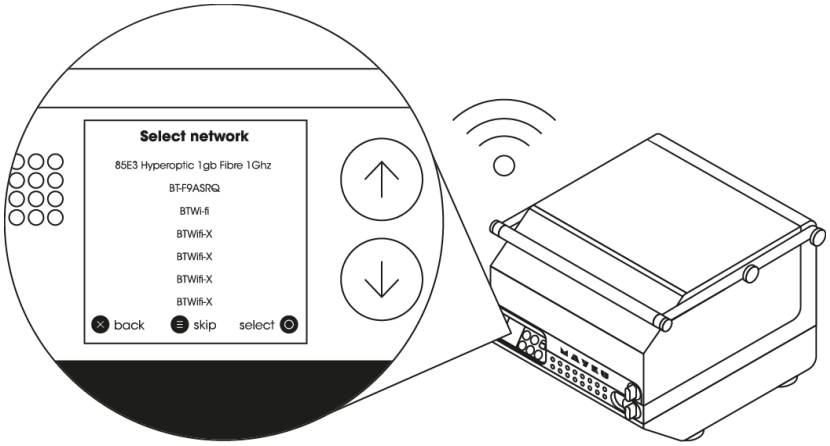

5.1.5 Machine Registration

Scan the QR code on the front of your quick start guide to register and activate your machine, and gain access to the Multiplier Academy — your community hub of resources, projects and personalised help to get the most out of your Multiplier.

You can also register any time by visiting: **platform.mayku.me**

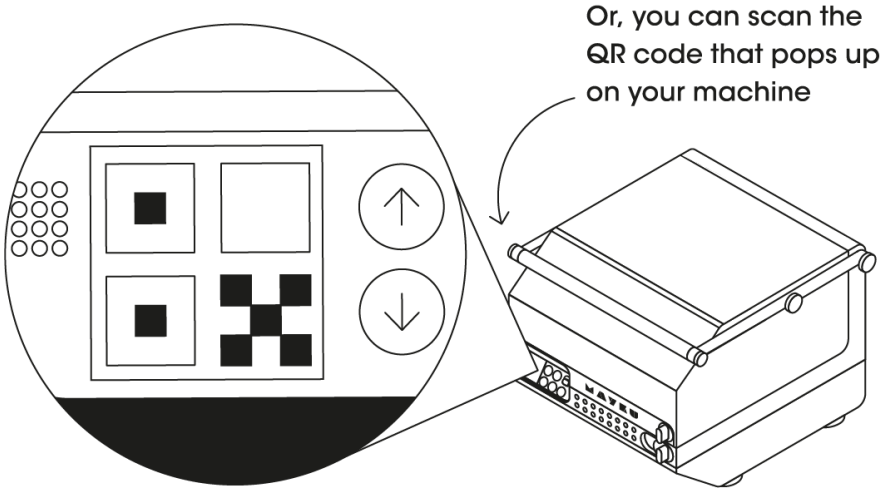

5.1.6 Starting/Stopping the product's operation

The machine can be stopped at any time during forming by following the below:

- Hold the 'X' button
- Select 'Abort'

To emergency shut down your machine, switch off the machine at the mains, lower the lid and unlock both locks.

5.1.7 Checks before using the machine

1. Ensure the machine is on a level and even surface
2. Ensure both safety release valves have clearance and are not obstructed.
3. Ensure the machine is clean and clear of debris
4. Ensure the heaters are not cracked or broken
5. Ensure the reflector is free from dust or debris
6. Ensure that no objects or debris are obstructing the temperature sensor
7. Ensure that the seal is clean and even, with minimal warping and distortion.

See section **6.1** to clarify the above operations.

5.2 What to do in emergency and exceptional situations

⚠WARNING

Make sure you know where the emergency stop buttons are located before operating the machine.

To emergency shut down your machine, switch off the machine at the mains, lower the lid and unlock both locks. All activities of the machinery are then aborted. Once ready, the machine can be turned back on with no reset required.

5.2.1 Emergency situation

In the case of an overheating / fire event:

1. Switch off the machine at the mains and close the lid immediately (if possible).
2. A CO2 or powder fire extinguisher shall be used due to electrical components in the machine.
3. Do not attempt to repair the machine, all repairs shall be carried out by a trained professional.

In the case of an overpressurisation event:

1. Switch off the machine at the mains and allow it to cool down.
2. To vent the dome, pull down on the ring tab on the safety release valve, positioned on the base of the machine (bottom rear, see diagram in section **2.5**).
3. To vent the tanks, pull down on the ring tab on the safety release valve, positioned on the base of the machine (bottom front, see diagram in section **2.5**).

6 MAINTENANCE

⚠WARNING

Opening or modifying the machine will void your warranty and could cause serious injury or death.

6.1 How to maintain the machine

Product maintenance by non-skilled persons

6.1.1 Cleaning and lubrication

Cleaning the seal:

1. Use a damp microfiber cloth and clean the seal in a circular motion, making sure the seal is seated properly into the dome.

Cleaning the mesh:

1. Locate screws
2. Unscrew
3. Clean with damp cloth

Cleaning the heat sensor:

1. Use dry compressed air to remove any debris or obstructions.
2. Use a cotton swab to gently clean the sensor.

Lubricating the rails:

1. If the rails are running dry and making a grating sound, apply a small amount of lithium based lubricant to the rails. Do not use any type of dry lubricant (PTFE powder, graphite powder, etc.) with any recirculating ball or roller type of bearing. While these lubricants are good for sliding motion, they do very little to aid rolling friction.

Cleaning the heat reflector:

1. Clean the reflector with a microfibre cloth, avoiding the heaters where necessary.

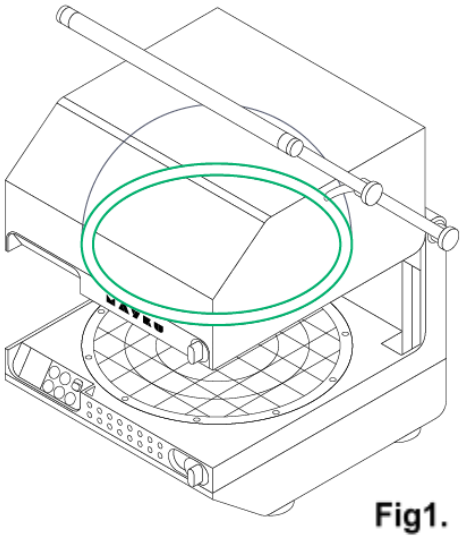

Fig1.

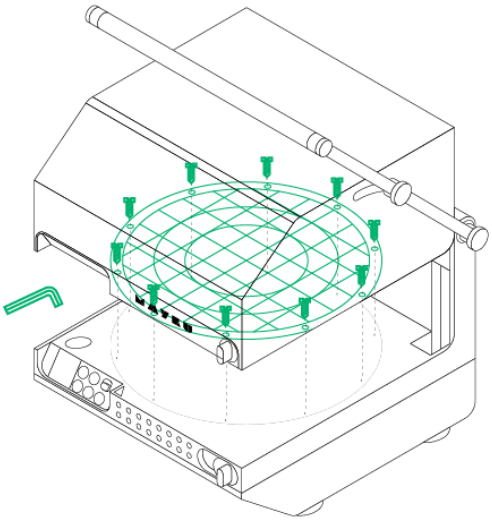

Fig2.

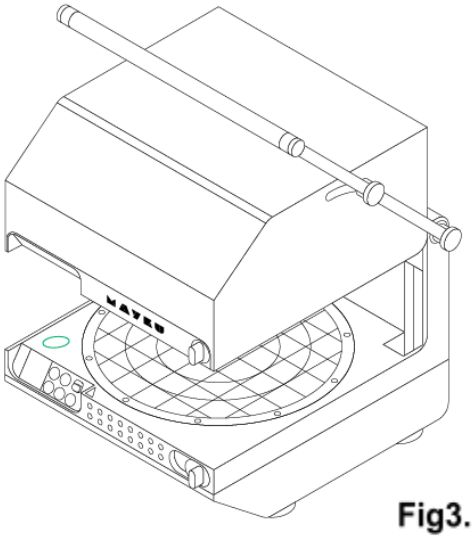

Fig3.

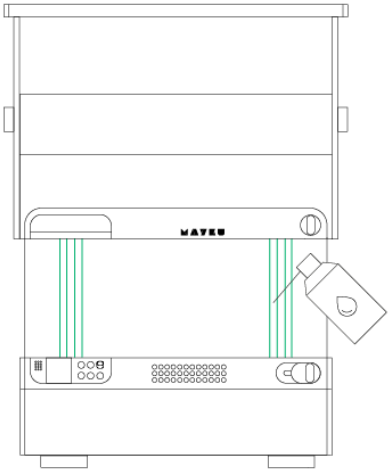

Fig4.

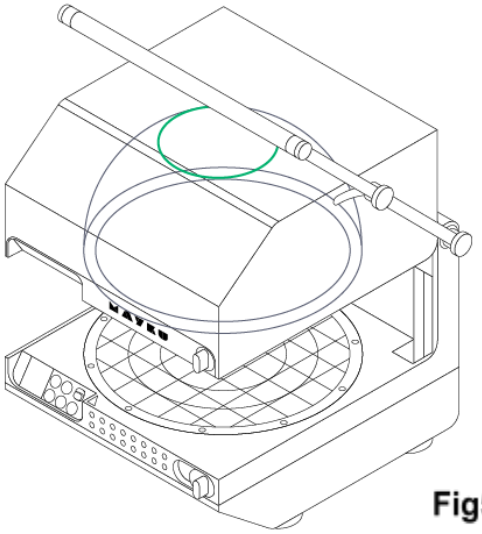

Fig5.

6.1.2 *Draining the tanks*

NOTICE

Draining the tanks creates a loud noise, and can spray water out the bottom of the machine. Make sure a thin towel is placed under the machine, without obstructing the release valve.

⚠WARNING

Make sure to wear hearing protection when doing tank draining/venting.
Only use tools as described in 6.1.

Tank draining process:

1. Follow on Screen instructions (Menu > Maintenance) - more information at platform.mayku.me

6.2 How to inspect the product

6.2.1 Weekly inspection tasks

Task	Action
Check the seal for signs of dirt	Wipe clean the seal with a damp cloth.
Check the bed for debris or dirt	Wipe down with a damp cloth, or remove for better cleaning.
Check heaters for signs of cracking or failure.	Do not attempt to fix. Contact customer support at support@mayku.me.

6.2.2 Monthly Inspection tasks

Task	Action
Drain the tanks	Follow the on-screen maintenance instructions in the settings menu.
Check the heat temperature sensor	Clean gently with a damp cloth or cotton swab.
Check the heat reflector	Wipe down the heat reflector.
Check the rail lubrication	Apply recommended lubricant if dry.

7 TROUBLESHOOTING AND REPAIR

7.1 How to identify and solve problems

⚠WARNING

This product is not intended for end user repair due to specialised pressure equipment inside the machine. Opening or modifying the machine will void your warranty and could cause serious injury or death.

Error	Cause	Solution
Machine leaks when forming.	Seal is dirty or mis-set.	Clean seal and ensure it is properly set into the dome.
Plastic dips or raises too much during heating.	Temperature sensor is obstructed or dirty.	Make sure the temperature sensor is clean and free from debris.
Plastic bursts during forming.	Mold has too many undercuts or improper	Use a different design of mold that better caters for

	elements for thermoforming.	the properties of thermoforming.
Plastic does not form around molds properly.	Machine was left closed too long before locking and forming, allowing the sheet to cool.	Close and lock the machine faster to maintain plastic temperature.
Error code on display.	Internal electronics failure.	Report to Mayku at support@mayku.me.

7.2 Frequently Asked Questions

Question	Answer
Where can I purchase sheets for my machine?	You can purchase sheets on our website, at **mayku.me.**
How much pressure does the Multiplier use?	The Multiplier uses a maximum of 60PSI (4.1 Bar) in the dome to form the sheet, and a maximum of 175PSI (12 Bar) in the tanks for air storage.
What is the maximum temperature of the Multiplier?	The Multiplier can form sheets up to 220°C (428°F).
How long does a form take on the Multiplier?	A form on the Multiplier normally takes between 5-10 minutes.

For further information please visit: **platform.mayku.me**

8 DISPOSAL

8.1 Disposal of electronic components

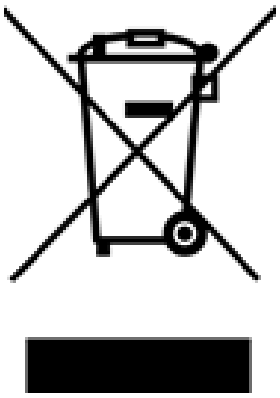

The symbol on the product, the accessories or packaging indicates that this device shall not be treated as unsorted municipal waste, but shall be collected separately! Dispose of the device via a collection point for the recycling of waste electrical and electronic equipment if you live within the EU and in other European countries that operate separate collection systems for waste electrical and electronic equipment. By disposing of the device in the proper manner, you help to avoid possible hazards for the environment and public health that could otherwise be caused by improper treatment of waste equipment. The recycling of materials contributes to the conservation of natural resources.

8.2 Disposal of packaging waste

The packaging is made of environmentally friendly materials, which may be disposed through your local recycling facilities. By disposing of the packaging and packaging waste in the proper manner, you help to avoid possible hazards for the environment and public health. The symbol on the packaging indicates that the packaging is made of PAP.

8.3 Environmental Commitment

At Mayku we are working towards a sustainable future. Where people have the power to create, not just consume. We consider the environmental impact of every product we make as well as the materials that work with them. That’s why Mayku Sheets are made out of as much recycled content as possible without compromising quality. We have also ensured that they are fully recyclable - so you can put them in your regular household recycling waste. More than a machines company Mayku is a community of Makers. And we need you - to join us in creating a sustainable future. Please help us care for our environment by recycling Mayku products and consumables whenever possible.

9 WARRANTY

9.1 Exclusive Limited Warranty

Mayku warranty obligations for all Hardware Products sold by Mayku are limited to the terms

set forth below. To be eligible for this Exclusive Limited Warranty the Hardware products shall be purchased through Mayku or through a Mayku Authorised Reseller with a valid Proof of Purchase.

Mayku warrants Mayku-branded Hardware Products against defects in materials and workmanship under normal use for a period of two years from the date of purchase by the original end-user purchaser (“Warranty Period”). Hardware Products include the Multiplier, and/or any factory-reconditioned version of the aforementioned Product.

If a hardware defect arises and a valid claim is received within the Warranty Period, at our sole option and to the extent permitted by law, Mayku will either 1) repair the hardware defect at no charge, using new or refurbished replacement parts, 2) exchange the Hardware Product with a Hardware Product that is new or reconditioned by Mayku or that has been manufactured from new or serviceable used parts and is at least functionally equivalent to the original Hardware Product, or 3) refund the purchase price of the Hardware Product.

When a Hardware Product or part is exchanged, any replacement item becomes your property and the replaced item becomes Mayku’s property. Parts provided by Mayku in fulfillment of its warranty obligation shall be used in Hardware Products for which warranty service is claimed. When a refund is given, the Hardware Product for which the refund is provided shall be returned to Mayku unless specified otherwise.

9.2 Exclusions from and limitation to Warranty

This Limited Warranty applies only to Hardware Products manufactured by or for Mayku that can be identified by the “Mayku” logo affixed to them. The Limited Warranty does not apply to any non-Mayku Hardware Products.

Mayku does not warrant that the operation of the Hardware Product will be uninterrupted or error-free. Mayku is not responsible for damage arising from failure to follow instructions relating to theHardware Product’s use.

This warranty does not apply: a) to damage caused by accident, abuse, misuse, flood, fire, earthquake, or other external causes; b) to damage caused by operating the Hardware Product outside the permitted or intended uses described by Mayku; c) to damage caused by service (including upgrades and expansions) performed by anyone who is not a representative of Mayku; d) to a Hardware Product or part that has been modified to alter functionality or capability without the written permission of Mayku e) to consumables, unless damage has

occurred due to a defect in materials or workmanship; or f) to cosmetic damage, including but not limited to scratches, dents.

This warranty gives you specific legal rights, and you may also have others rights which vary from state to state or country to country. Mayku responsibility for hardware defects is limited to repair or replacement service as determined by Mayku in its sole discretion.

9.3 Disclaimer of Warranties; Limitation of Liability

Except as explicitly provided in these Terms, we do not guarantee, represent or warrant that your use of our service or any Mayku Hardware Product will be uninterrupted, timely, secure or error-free. We do not warrant that the results that may be obtained from the use of the service or the Hardware Product will be accurate or reliable. You agree that from time to time we may remove the service for indefinite periods of time or cancel the service at any time, without notice to you. Obtaining Warranty Service Please contact Mayku at **support@mayku.me** and we will be able to assist you. We will be required to help assist in diagnosing issues with your Hardware Product. Service options, parts availability, and response times may vary. Service options are subject to change at any time. In accordance with applicable law, Mayku may require that you furnish proof of purchase details before receiving warranty service.

10 TERMS

All information in the quick start guide, instruction manual and packaging materials is subject to change at any time without notice and is provided for convenience purposes only. Mayku reserves the right to modify or revise the quick start guide, instruction manual and packaging materials in its sole discretion and at any time. You agree to be bound by any modifications and/or revisions. Please contact Mayku Support for up-to-date information.

The design of the quick start guide, instruction manual and packaging materials and all text, graphics, information, content, and other material are protected by copyright and other laws. The contents are copyright 2021, 2022 Mayku, LTD, or our respective affiliates and suppliers. All rights reserved.

Certain trademarks, trade names, service marks, and logos (the “Marks”) used in the quick start guide, instruction manual and packaging materials are registered and unregistered trademarks, trade names, and service marks of Mayku and its affiliates. Nothing contained in the quick start guide, instruction manual and packaging materials grants or should be construed as granting, by implication, estoppel, or otherwise, any license or right to use any Marks without the written permission of Mayku. Any unauthorised use of any information, materials, or Marks may violate copyright laws, trademark laws, laws of privacy and publicity, and/or other laws and regulations.

10.1 Disclaimers

Neither Mayku nor any of our affiliates warrants the accuracy or completeness of the information, products,or services provided by or through the which are provided “as is” and without any express or implied warranties of any kind, including warranties of merchantability, fitness for a particular purpose, or non-infringement of intellectual property. To the fullest extent permissible by the applicable law, we hereby disclaim all liability for product defect or failure or for claims that are due to normal wear, product misuse or abuse, product modification, improper product selection, noncompliance with any codes, or misappropriation. To the fullest extent permissible by the applicable law, we hereby disclaim any and all responsibility, risk, liability, and damages arising out of death or personal injury resulting from assembly or operation of our products. The foregoing exclusions do not apply to the extent prohibited by law; please refer to your local laws for any such prohibitions. We make no warranties to those defined as “consumers” in the Magnuson-Moss Warranty–Federal Trade Commission Improvement Act.

10.2 Limitation of Liability

In no event will Mayku or any of our respective officers, directors, employees, shareholders, affiliates, agents, successors, or assigns, nor any party involved in the creation or production of our products, be liable to you or anyone else for any indirect, special, punitive, incidental, or consequential damages (including, without limitation, those resulting from lost profits or business interruption) arising out of the use, inability to use, or the results of use of the quick start guide, instruction manual and packaging materials, whether based on warranty, contract, tort, or any other legal theory and whether or not advised of the possibility of such damages. The foregoing limitations of liability do not apply to the extent prohibited by law; please refer to your local laws for any such prohibitions.

EC/EU Declaration of Conformity

The undersigned, representing the following:

Manufacturer and	the authorised representative established within the European Economic Area:
Company name: **Mayku Limited** Address: **The Biscuit Factory, Unit J410, Jam Studios, 100 Drummond Road, London, United Kingdom, SE16 4DG**	
Name and address of person/Company authorised to compile the technical file established in the EU Community:	

herewith declare that the following machinery:

Description of machinery
Generic denomination: **Multiplier**
Function: **Desktop pressure forming machine**
Model/s: MMUA22100AA; MMUA22123UK; MMUA22123EU; MMUA22123AU;MMUA22112US
Serial no/s.:

Fulfil the relevant provisions of European Directive 2014/30/EU (EMCD) and 2014/53/EU (RED) and 2006/42/EC (MD) and safety objectives of 2014/35/EU (LVD). The harmonised standards used in order to obtain compliance to the mentioned directives are the following:

EN 60204-1:2018 Safety of machinery - Electrical equipment of machines - Part 1: General requirements;
EN ISO 12100:2010 Safety of machinery - Basic concepts, general principles for design - Part 1: Basic terminology, methodology;
EN ISO 4414:2010 Pneumatic fluid power — General rules and safety requirements for systems and their components
EN ISO 13857:2019 Safety of machinery - Safety distances to prevent hazard zones being reached by upper and lower limbs
EN 349:1993 + A1:2008 Safety of machinery — Minimum gaps to avoid crushing of parts of the human body
EN IEC 61000-6-2:2019 Electromagnetic compatibility (EMC) -- Part 6-2: Generic standards - Immunity for industrial environments;
EN IEC 61000-6-4:2019 Electromagnetic compatibility (EMC) - Part 6-4: Generic standards - Emission standard for industrial environments
EN IEC 61000-3-2:2019 + A1:2021 Electromagnetic compatibility (EMC) Part 3-2: Limits — Limits for harmonic current emissions (equipment input current ≤16 A per phase)
EN 61000-3-3:2013 + A2:2021 + AC:2022-01 Electromagnetic compatibility (EMC) - Part 3-3: Limits - Limitation of voltage changes, voltage fluctuations and flicker in public low-voltage supply systems, for equipment with rated current ≤16 A per phase and not subject to conditional connection
ETSI EN 301 489-1 V2.2.3 Electromagnetic compatibility and Radio spectrum Matters (ERM); ElectroMagnetic Compatibility (EMC) standard for radio equipment and services; Part 1: Common technical requirements
ETSI EN 301 489-3 V2.1.1 Electromagnetic compatibility and Radio spectrum Matters (ERM); ElectroMagnetic Compatibility (EMC) standard for radio equipment and services; Part 3: Specific conditions for Short-Range Devices (SRD) operating on frequencies between 9 kHz and 40 GHz
ETSI EN 301 489-17 V3.2.4 Electromagnetic compatibility and Radio spectrum Matters (ERM); ElectroMagnetic Compatibility (EMC) standard for radio equipment; Part 17: Specific conditions for 2,4 GHz wide-band transmission systems, 5 GHz high performance RLAN equipment and 5,8 GHz Broadband Data Transmitting Systems
ETSI EN 300 328 V2.2.2 Wideband transmission systems; Data transmission equipment operating in the 2,4 GHz band; Harmonised Standard for access to radio spectrum
EN 62311:2020 Assessment of electronic and electrical equipment related to human exposure restrictions for electromagnetic fields (0 Hz to 300 GHz)
Fulfil the relevant provisions of European Directive 2011/65/EU and electronic equipment(RoHS) with its amendment directive 2015/863/EU.

Mayku Limited

The Biscuit Factory, Unit J410, Jam Studios, 100 Drummond Road, London, United Kingdom, SE16 4DG

Fulfil the relevant provisions of Supply of Machinery (Safety) Regulations 2008; Electrical Equipment (Safety) Regulations 2016, Radio Equipment Regulations 2017 and Electromagnetic Compatibility Regulations 2016. The harmonised standards used in order to obtain compliance to the mentioned directives are the following:

BS EN 60204-1:2018 Safety of machinery - Electrical equipment of machines - Part 1: General requirements;
BS EN ISO 12100:2010 Safety of machinery - Basic concepts, general principles for design - Part 1: Basic terminology, methodology;
BS EN ISO 4414:2010 Pneumatic fluid power — General rules and safety requirements for systems and their components
BS EN ISO 13857:2019 Safety of machinery - Safety distances to prevent hazard zones being reached by upper and lower limbs
BS EN 349:1993 + A1:2008 Safety of machinery — Minimum gaps to avoid crushing of parts of the human body
BS EN IEC 61000-6-2:2019 Electromagnetic compatibility (EMC) -- Part 6-2: Generic standards - Immunity for industrial environments;
BS EN IEC 61000-6-4:2019 Electromagnetic compatibility (EMC) - Part 6-4: Generic standards - Emission standard for industrial environments
BS EN IEC 61000-3-2:2019 + A1:2021 Electromagnetic compatibility (EMC) Part 3-2: Limits — Limits for harmonic current emissions (equipment input current ≤16 A per phase)
BS EN 61000-3-3:2013 + A2:2021 + AC:2022-01 Electromagnetic compatibility (EMC) - Part 3-3: Limits - Limitation of voltage changes, voltage fluctuations and flicker in public low-voltage supply systems, for equipment with rated current ≤16 A per phase and not subject to conditional connection
ETSI BS EN 301 489-1 V2.2.3 Electromagnetic compatibility and Radio spectrum Matters (ERM); ElectroMagnetic Compatibility (EMC) standard for radio equipment and services; Part 1: Common technical requirements
ETSI BS EN 301 489-3 V2.1.1 Electromagnetic compatibility and Radio spectrum Matters (ERM); ElectroMagnetic Compatibility (EMC) standard for radio equipment and services; Part 3: Specific conditions for Short-Range Devices (SRD) operating on frequencies between 9 kHz and 40 GHz
ETSI BS EN 301 489-17 V3.2.4 Electromagnetic compatibility and Radio spectrum Matters (ERM); ElectroMagnetic Compatibility (EMC) standard for radio equipment; Part 17: Specific conditions for 2,4 GHz wide-band transmission systems, 5 GHz high performance RLAN equipment and 5,8 GHz Broadband Data Transmitting Systems
ETSI BS EN 300 328 V2.2.2 Wideband transmission systems; Data transmission equipment operating in the 2,4 GHz band; Harmonised Standard for access to radio spectrum
BS EN 62311:2020 Assessment of electronic and electrical equipment related to human exposure restrictions for electromagnetic fields (0 Hz to 300 GHz)

Name: **Benjamin Redford**

Position: CPO + Founder

Signature:

Place: London, UK

Date: 27.04.2022