# User Manual

## PAP System(RXiBreeze PAP System)

resvent

**Contents**

1 Welcome ..... 1

2 Intended Use ..... 1

3 Contraindications ..... 1

4 Safety Information ..... 2

5 Symbol ..... 6

6 System Contents ..... 7

7 System Overview ..... 9

8 Navigating the Device Screens ..... 14

9 Operation ..... 14

10 Device Alert ..... 22

11 Troubleshooting ..... 26

12 Cleaning and Maintaining ..... 27

13 Maintenance ..... 31

14 Storage and Disposal ..... 31

14.1 Storage ..... 31

15 Specification ..... 32

16 EMC Declaration ..... 34

## 1 Welcome

The RXiBreeze PAP Systems contain CPAP and APAP Modes. They are both continuous positive airway pressure devices.
The RXiBreeze PAP Systems include the following models:
RXiBreeze20C,RXiBreeze 20A.

### Responsibility on the Manufacturer Party

Resvent is responsible for the effects on safety, reliability and performance of this product, only if:

- All installation operations, expansions, changes, modifications and repairs of this product are conducted by Resvent authorized personnel.
- All spare parts for repair, accessories, consumables are conducted by Resvent or the authorized personnel.
- The electrical installation of the relevant room complies with the applicable national standard and the manual requirements.
- The product is used in accordance with the instructions for use.

### IMPORTANT

Read this entire guide before using the device.

## 2 Intended Use

The RXiBreeze™ PAP Systems deliver positive airway pressure therapy for the treatment of Obstructive Sleep Apnea (OSA) in spontaneously breathing patients weighting over 30kg (66lbs). It is for use in the home, hospital, or institutional environment.

## 3 Contraindications

When assessing the relative risks and benefits of using this equipment, the clinician should understand that this device can deliver pressures up to 20 $cmH_2O$. In the event of certain fault conditions, maximum pressure 40 $cmH_2O$ is possible. Studies have shown that the following pre-existing conditions may contraindicate the use of CPAP therapy for some patients:

- Severe coronary artery disease
- Bullous Lung Disease
- Pathologically Low Blood Pressure
- Bypassed Upper Airway
- Pneumothorax

Caution should be used when prescribing CPAP therapy for susceptible patients such as those with: cerebral spinal fluid (CSF) leaks, abnormalities of the cribriform plate, prior history of head trauma, and/or Pneumothorax.
The use of positive airway pressure therapy may be temporarily contraindicated if you exhibit signs of a sinus or middle ear infection.
**Note:** In either case above, it can only be determined by a competent physician whether to use CPAP device.

### User qualifications

The person operating the device by the instruction in the user's manual is referred as the "user". In contrast, a "patient" is the person receiving the therapy. Always perform all the operating steps in accordance with the user's manual.
Some lay person can receive specified professional training about how to use the device including all related to accessories from your dealer or the manufacturer.

## 4 Safety Information

WARNING: Indicate the possibility of injury to the user or the operator.
CAUTION: Indicate the possibility of damage to the device.

**WARNING:**

- This manual serves as a reference. The instructions in this manual are not intended to supersede the health care professional's instructions regarding the use of the device.
- This device is not intended for life support.
- A mask should not be used unless the device is turned on, otherwise, there is danger of suffocation.
- The device must be used only with the masks and accessories recommended by Resvent. The masks and accessories are validated for use with Resvent devices.
- The exhalation port(s) associated with the mask should never be blocked. The device is intended to be used with special masks or connectors that have exhalation ports to allow continuous flow of air out of the mask. When the device is turned on and functioning properly, new air from the device flushes the exhaled air out through the mask exhalation port. However, when the device is not operating, enough fresh air will not be provided through the mask.
- If you are using a full-face mask (a mask covering both your mouth and your nose), the mask must be equipped with a safety (entrainment) valve.
- When using oxygen with this system, always make sure that the device is turned on and airflow generated before the oxygen supply is turned on. Always turn the oxygen supply off before the device is turned off, so that unused oxygen does not accumulate within the device enclosure and create a risk of fire.
- Sources of oxygen must be located more than 1 m from the equipment to avoid the risk of fire and burns.
- Do not connect the device to an unregulated or high-pressure oxygen source.
- Oxygen must not be used while smoking or in the presence of an open flame.
- Do not use the device in the presence of a flammable anaesthetic mixture in combination with oxygen or air, or in the presence of nitrous oxide.
- Do not use the device near a source of toxic or harmful vapors.
- Do not use this device if the room temperature exceeds 35°C (95°F). If the device is used at room temperatures warmer than 35°C (95°F), the temperature of the airflow may exceed 43°C (109°F). This could cause irritation or injury to your airway.
- The time required for the CPAP System to warm from the minimum storage temperature between uses until the CPAP System is ready for its intended use when the ambient temperature is 20℃ is at least 1h, and
- The time required for the CPAP System to cool from the maximum storage temperature between uses until the CPAP System is ready for its intended use when the ambient temperature is 20℃ (68°F) is at least 1h.
- The device is not used beyond the specified temperature range.

- Do not operate the device in direct sunlight or near a heating appliance because these conditions can increase the temperature of the air coming out of the device.
- Contact your health care professional if symptoms of sleep apnea recur.
- If you notice any unexplained changes in the performance of this device, if it is making unusual or harsh sounds, if it has been dropped or mishandled, if water is spilled into the enclosure, or if the enclosure is broken, disconnect the power cord and discontinue use. Contact your home care provider.
- Repairs and adjustments must be performed by Resvent-authorized service personnel only. Unauthorized service could cause injury, invalidate the warranty, or result in costly damage.
- Do not use any accessories, detachable parts, and materials not recommended by Resvent. Incompatible parts or accessories can result in degraded performance.
- The Health Industry Manufacturers Association recommends that a minimum separation of 16cm be maintained between a wireless phone and a pacemaker to avoid potential interference with the pacemaker.
- Use only power cords supplied by Resvent for this device. Use of power cords not supplied by Resvent may cause overheating or damage to the device and may result in increased emissions or decreased immunity of the equipment or system.
- The device should not be used while stacked or in close approximation to other non-approved devices.
- Use only approved cables and accessories. Misuse may affect EMC performance and should be avoided.
- Inspect the tubing for damage or wear. Discard and replace the tubing as necessary.
- Periodically inspect electrical cords and cables for damage or signs of wear. Discontinue use and replace if damaged.
- To avoid electrical shock, always unplug the power cord from the wall outlet before cleaning the device. DO NOT immerse the device in any fluids.
- Be sure to route the power cord to the outlet in a way that will prevent the cord from being tripped over or interfered with by chairs or other furniture.
- This device is activated when the power cord is connected.
- For safe operation when using a humidifier, the humidifier must always be positioned below the breathing circuit connection at the mask. The humidifier must be level for proper operation.
- Nebulization or humidification can increase the resistance of breathing system filters and the operator must monitor the breathing system filter frequently for increased resistance and blockage to ensure the delivery of the therapeutic pressure.
- Please check whether there is water in the device before use. The maximum fill level is 290 mL.
- Failure to use a mask or accessory that minimizes re-breathing of carbon dioxide or permits spontaneous breathing can cause asphyxiation.
- Do not connect breathing tubes or accessories with any humidifier and ventilator that are not specified for use with these breathing tubes or accessories.
- Do not cover or heat the breathing tube with anything influent the patient end temperature.
- Do not use this device outside the specified ambient temperature range or humidity range. The humidity performance of the device can be compromised when used outside the specified ambient temperature range or humidity range.
- No modification of this equipment is allowed.
- Parts of the equipment are not serviced or maintained while in use with the patient.
- The PATIENT is an intended OPERATOR.

  The Patient can safely use therapy functions of the equipment and this equipment shall not be serviced or maintained while in use with the patient.

- Please first check the breathing tube is connected correctly to avoid strangulation risk due to breathing tube and hoses when used.
- Do not pull or stretch the tubing. This could result in circuit leaks.
- If the device is used by multiple persons (such as rental devices), a low-resistance, main flow bacteria filter should be installed in-line between the device and the circuit tubing to prevent contamination.
- Allow the humidifier heater plate and water to cool down for approximately 15 minutes before removing the water tank. A burn may result from: touching the heater plate, coming in contact with the heated water, or touching the tank pan.

.

**CAUTION**:

- Medical electrical equipment needs special precautions regarding EMC and needs to be installed according to EMC information, Contact your home care provider regarding EMC installation information.
- Mobile RF communications equipment can affect medical electrical equipment.
- Pins of connectors marked with the ESD warning symbol shall not be touched and connections shall not be made without special precautions. Precautionary procedures include methods to prevent build-up of electrostatic charge (e.g., air conditioning, humidification, conductive floor coverings, non-synthetic clothing), discharging one's body to the frame of the equipment or system or to earth. It is recommended that all individuals that will handle this device understand these precautionary procedures at a minimum as part of their training.
- Condensation may damage the device. If this device has been exposed to either very hot or very cold temperatures, allow it to adjust to room temperature (operating temperature) before starting therapy. Do not operate the device outside of the operating temperature range shown in the Specifications.
- Do not use extension cords with this device.
- Make sure the filter area on the side of the device is not blocked by bedding, curtains, or other items. Air must flow freely around the device for the system to work properly.
- Make sure the gas intake port on the side of the device is not blocked by bedding, curtains, or other items. Air must flow freely around the device for the system to work properly.
- Do not place the device directly onto carpet, fabric, or other flammable materials.
- Do not place the device in or on any container that can collect or hold water.
- A properly installed, undamaged filter is required for proper operation.
- Tobacco smoke may cause tar build-up within the device, which may result in the device malfunctioning.
- Dirty inlet filters may cause high operating temperatures that may affect device performance. Regularly examine the inlet filters as needed for integrity and cleanliness.
- Always ensure that the DC power cord securely fits into your therapy device prior to use. Contact your home care provider or Resvent to determine if you have the appropriate DC cord for your specific therapy device.
- When DC power is obtained from a vehicle battery, the device should not be used while the vehicle's engine is running. Damage to the device may occur.
- Only use a Resvent DC Power Cord and Battery Adapter Cable. Use of any other system may cause damage to the device.
- When change the pressure setting, please consult your doctor.
- Do not position next to a curtain that blocks the flow of cooling air, thereby causing the equipment to overheat.

- Do not block the gas INTAKE PORT, thereby interfering with therapy.
- Please follow the local regulation when disposing of the device
- The proper placement and positioning of the MASK on the face is critical to the consistent operation of this equipment.
- Please check that the compatibility of the equipment and all of the parts and accessories used to connect to the patient before use.
- Ensure that the therapeutic pressure settings were determined for the patient individually with the configuration of the equipment to be used, including accessories.
- For multiple patients use, please use personal breathing tube and mask, do not use other.
- You should position the device far away your pets, pests or children when you use the device in home environment.
- In case you feel comfortless when you contact the device. You shall stop to use the device and contact your supplier immediately. Because it may cause allergic reactions.
- Please periodically reassess the setting(s) of the therapy for effectiveness.
- Never install a wet filter into the device. You must ensure sufficient drying time for the cleaned filter.

**Empty the water tank before packing or moving the device!**

FCC Caution:
Any Changes or modifications not expressly approved by the party responsible for compliance could void the user's authority to operate the equipment.
This device complies with part 15 of the FCC Rules. Operation is subject to the following two conditions: (1) This device may not cause harmful interference, and (2) this device must accept any interference received, including interference that may cause undesired operation.
FCC RF Radiation Exposure Statement:
1. This Transmitter must not be co-located or operating in conjunction with any other antenna or transmitter.
2. This equipment complies with RF radiation exposure limits set forth for an uncontrolled environment.
3.This equipment should be installed and operated with minimum distance 20cm between the radiator& your body.

## 5 Symbol

The following symbols may appear on the device, power supply and accessories.

| Symbol | Definition |
|---|---|
| | Manufacturer |
| | Date of Manufacture(YYYY-MM-DD) |
| CN | Country of manufacture:CN(China). |
| # | Model number |
| SN | Serial number |
| | Direct current. |
| | Temperature limit |
| | Humidity limitation |
| | Atmospheric pressure limitation |
| | Follow instructions for use. It is mandatory action to read the instructions for use. |
| | Separate collection for electrical and electronic equipment according to WEEE Directive 2012/19/EU |
| | Class II (double or reinforced insulation) |
| IP22 | Prevent solid foreign matters with a diameter of not less than 12.5mm and prevent vertical dripping when the shell is inclined at 15 ° |
| | Type BF Applied part |

| | |
|---|---|
| MD | Medical device |
| MR | The device is not suitable for use in MRI environment |
| | Respiratory air humidifier is heated. Do not touch the element |
| | Therapy On/Off Button (Starts and stops the airflow for therapy) |
| | This way up at transport and storage |
| | Do not roll |
| | Fragile, handle with care |
| | Keep dry |
| | Keep away from sunlight |
| 8 | Stacking limit by 8 |
| | Recyclable materials |
| Rx Only | U.S.Federal law restricts this device to sale by or on the order of a physician or any other practitioner licensed by state law. |
| UDI | Unique device identifier |
| FCC ID | Identifies unit has been registered as a radio device |

## 6 System Contents

Your CPAP system may include the following items:

- CPAP Device
- Power Adapter
- Power Cord
- SD Card
- Flexible Tube: 19 mm or 15 mm tube
- Travel Bag

- User Manual
- Nasal mask or full face mask

**Note:** If any of these items are missing, please contact your home care provider.

## 7 System Overview

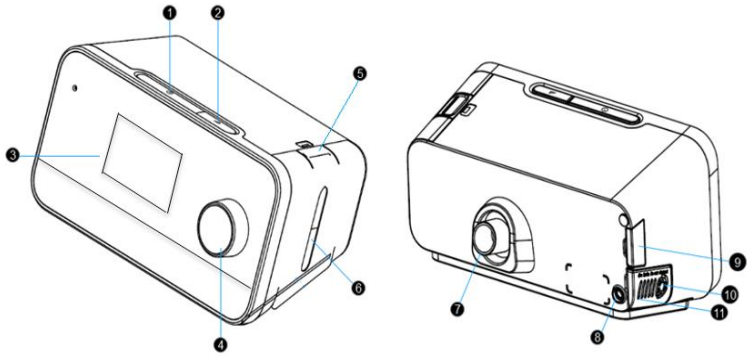


| # | Device Feature | Description |
|---|---|---|
| 1 | Therapy On/Off Button | Start and stopthe airflow for therapy. |
| 2 | Ramp Key | Activate the ramp feature during therapy. |
| 3 | LCD Display screen | This is the User interface for the therapy device. |
| 4 | Control Dial | Turn the dial to scroll between options on the screen. Press the dial to choose the option. |
| 5 | Water Tank Lock | Press the water tank lock to remove the water tank. |
| 6 | Water Tank | This one piece removable water tank holds the water for humidification. |
| 7 | Air Outlet Port | Connect the tubing here. |
| 8 | Power Inlet | Connect the power cord here. |
| 9 | SD card Access Door | This door lifts open for access to SD card. |
| 10 | Air Inlet Port | Inlet for room air. |
| 11 | Filter Cotton Cover | Open the filter cotton cover to place or change the filter cotton. |

CPAP often is the best treatment for obstructive sleep apnoea.

This CAPA system is an electronic-driven, microprocessor-controlled CAPA device that provides mechanical ventilation to a patient during use.

This CPAP treatment involves a CPAP machine, which has four main parts:

- A mask or other device that fits over the patient’s nose or patient’s nose and mouth. Straps keep the mask in place while the patient are wearing it.
- A tube that connects the mask to the machine's motor.
- A motor that blows air into the tube.
- CPAP machines have as well heated humidifiers.

The PAP system consists of four parts depending on their functions: mechanical

structure, pneumatic system, hardware system and software system. Each part is composed of multiple functional modules.

**Pneumatic system**

Figure 1 shows the pneumatic system, which includes four parts: gas supplies, humidifier and breathing system.

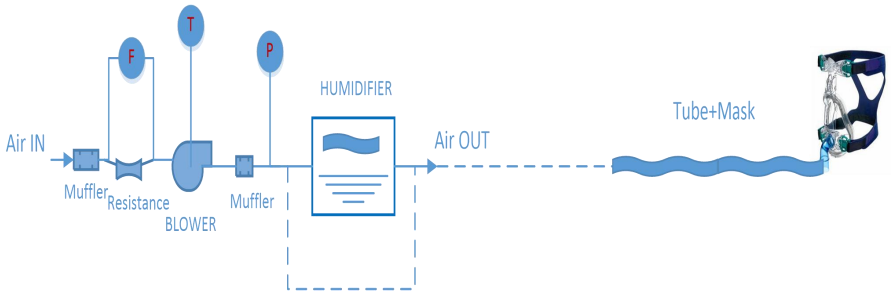


Figure 1-Pneumatic system

**7.1 Placing the Device**

Place the device on a firm, flat surface somewhere within easy reach of where you will use it at a level lower than your sleeping position. Make sure the device is away from any heating or cooling equipment (e.g., forced air vents, radiators, air conditioners).

**Note:** When positioning the device, make sure that the power cable is accessible because removing power is the only way to turn off the device.

**CAUTION:**

- Make sure the filter area on the side of the device is not blocked by bedding, curtains, or other items. Air must flow freely around the device for the system to work properly.
- Do not place the device directly onto carpet, fabric, or other flammable materials.
- Do not place the device in or on any container that can collect or hold water.
- Do not contact the metal surface of the heater when pulling out the water tank.

**7.2 Supplying AC Power**

Complete the following steps to operate the device using AC power:

1. Plug the socket end of the AC power cord (included) into the power supply (also included).
2. Plug the pronged end of the AC power cord into an electrical outlet that is not controlled by a wall switch.

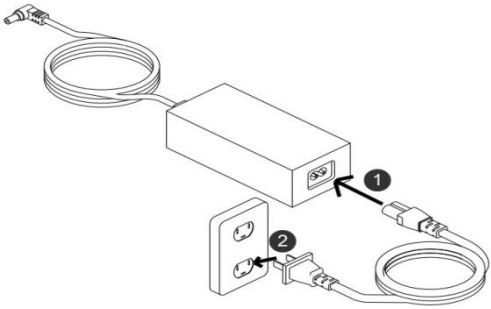


3. Plug the power supply cord’s connector into the power inlet on the side of the device.

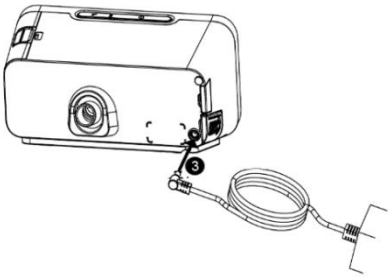


4. Verify that the plug at the side of the device, at the power supply, and at the electrical outlet are fully inserted.

5. When turning off the device Press Therapy On/Off Button, the device will stop work.

6. Disconnecting Network power source.

**WARNING:**

- During use if the power cord is disconnected or a power failure, the device buzzer alarm beeps. Please stop using it and check the power status.
- Please do not contact with the DC in connector when it was broken.
- Please avoid arcing, wiggling, or dropping the power supply on hard surfaces.
- Please periodically inspect electrical cords and cables for damage or signs of wear and to discontinue use and replace if damaged.
- Please first check the DC connector could be used normal and not breaking free.
- Never place the power cord around the neck.
- Do not use any small parts to fix power cord in position as they might be accidentally swallowed.

### 7.3 Connecting the Breathing Circuit

To use the system, you need the following accessories in order to assemble the recommended breathing circuit:

- Resvent interface (nasal mask or full face mask) with integrated exhalation port.
- Resvent flexible tubing, 1.8 m.

To connect your breathing circuit to the device, please follow the below steps:

1. Install the connector to the back of the device, and connect the tubing with it.

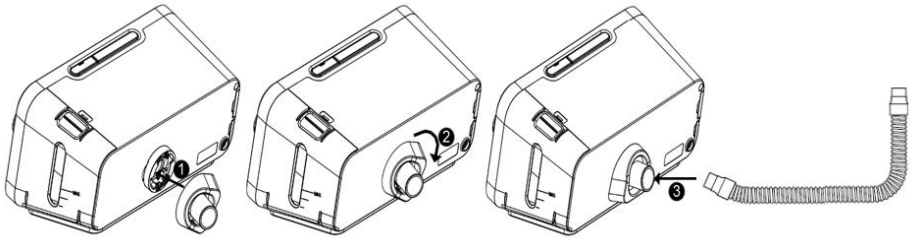

**Note:** If you are using a standard tube (not shown) instead of a heated tube, simply slide the tubing over the air outlet port on the therapy device.

2. Connect the tubing to the mask. For specific parameters and the correct use of the method, please refer to the breathing hose manual.

   **WARNING:** Do not pull or stretch the tubing, this could result in circuit leaks. Inspect the tubing for damage or wear. Discard and replace the tubing as necessary.

3. Attach the headgear to the mask if necessary. For specific parameters and the correct use of the method, please refer to the mask manual.

**WARNING:**

- If you are using a full face mask (a mask covering both your mouth and your nose), the mask must be equipped with a safety (entrainment) valve.
- If multiple users share the same equipment, use low-resistance and bacteria-filtered cotton between the equipment and the tube.
  **Note:** The selected mask, breathing tube shall meet the performance requirements with good stability. The user should check the mask and tube for damage before each use.
- If necessary, place a bacterial filter in the air outlet of the unit and connect the tube. The use of bacterial filter cotton may affect the equipment work. However, the device can remain functional and be treated.
- Never place the respiration hose around the neck.
- Do not use any small parts to fix the respiration hose in position as they might be accidentally swallowed.
- Do not squash the respiration hose.

## 7.4 Water-filling Operation

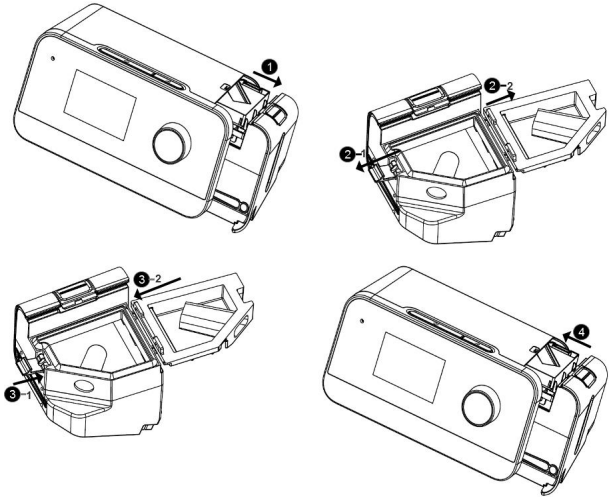


1. Remove the water tank from the device.
2. Open the water tank lid, fill it with water up to the maximum fill line.
3. Lock the water tank lid.
4. Install the water tank on the device.

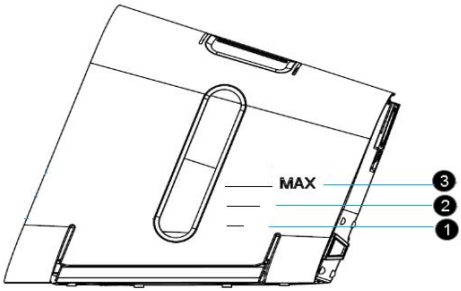


❶The fill line indicates 1/3 water level for safe operation.
❷The fill line indicates 2/3 water level for safe operation.
❸The fill line indicates the maximum water level for safe operation.

**CAUTION:**

- Use only room temperature distilled water or purified water.
- Do not fill the water tank above the maximum fill line. If the water tank is overfilled, water may leak into the therapy device, humidifier, or onto your furniture. Damage to the humidifier or therapy device may occur.
- Empty the water tank when the device is not in use.

## 8 Navigating the Device Screens

The User Interface (UI) on this device allows you to adjust the device settings and view information about your therapy. The UI is comprised of the display screen and the control dial. Rotate the control dial in either direction to scroll through the menu options on the display screen.

**Note:** The screen does not support touch operations. You must use the control dial to navigate the device menu.

To adjust a setting:

1. Rotate the control dial to your desired menu option.
2. Press the control dial to select that setting.
3. Rotate the control dial to change the setting.
4. Press the control dial again to save the change.

**Note:** The screens shown throughout this manual are examples for reference only. Actual screens may vary based upon device model and provider settings.

## 9 Operation

This chapter describes basic operation and precautions associated with this device. Each time you turn on the device, it will automatically run set by the user.

### 9.1 Starting the Device

1. Ensure power is supplied to the device. The first screen to display will be the Resvent logo, within 5 second followed by the patient standby screen (See Figure 1).
   **Note:** Boot buzzer should be “beep”. If not, you can’t use the equipment and then contact the supplier for inspection.
2. Put on your mask assembly. Refer to the instructions supplied with the mask.
3. Press the Therapy On/Off key on top of the device to turn on airflow and begin therapy. The screen will display to patient therapy clean interface (see Figure 2).
4. Make sure that no air is leaking from your mask. If necessary, adjust the mask and headgear until the air leak stops.
5. If you are using the device in a bed with a headboard, try placing the tubing over the headboard. This may reduce tension on the mask.
6. Press the Therapy On/Off key again to turn off therapy.

**Note:**

1. When any power interruption (e.g., blackout) happens during therapy, the device will resume therapy mode if the power is restored within 60 minutes.
2. Please keep away from incense and candles avoiding catching fire during use.

### 9.2 Patient Menu Navigation Settings

Patient Menu Navigation Setting including Standby interface shortcut operation.Therapy interface shortcut operation,Comfort Parameters setting interface,System setting interface.

#### 9.2.1 Patient Standby Interface

The Patient Standby Interface displays setup menus for the system main features，and the icons to indicate the current enabled features.

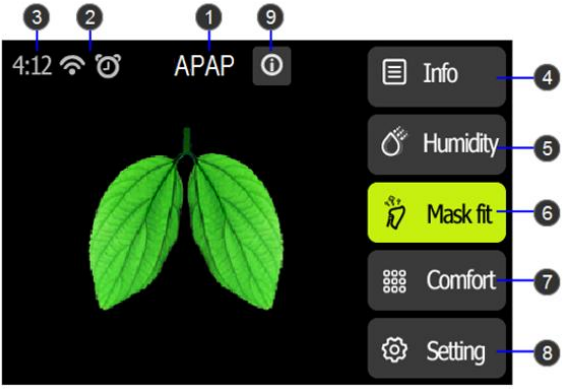


Figure1 Patient Standby Interface

| # | Feature | Description |
|---|---|---|
| 1 | Mode | Display the current mode. |
| 2 | Enabled features | Depending on setup, certain enabled therapy features will display here. |
| 3 | Time | Display the current time. |
| 4 | Patient Sleep Quality Report | Display the patient sleep quality report and the options for period of the report are: daily (recent 6 days) / 7 days / 14 days / 1 month / 3 months / 6 months / 1 year. |
| 5 | Humidity | Set humidifier level to enhance patient comfort of respiration.<br>Option: Auto / OFF / 1-8 Default: 3<br>Note:<br>1.The humidity level only can be set when the water in humidifier exceeds the minimum water level for safe operation.<br>2. The option Auto is not available in the RXiBreeze 20C. |
| 6 | Mask fit | Mask fit feature allows you to check the fit of your mask prior to starting therapy. This is done by measuring the amount of leak. |
| 7 | Comfort | Press to enter Comfort setting interface. |
| 8 | Setting | Press to enter Patient System Setting interface. |
| 9 | Alarm Message | Display the alarm messages. |

### 9.2.2 Patient Therapy Interface

When the therapy starts, the screen will switch to the Patient Therapy Interface, which displays the therapy parameters monitoring during therapy (See Figure2). The displayed parameters depend on the current therapy mode.

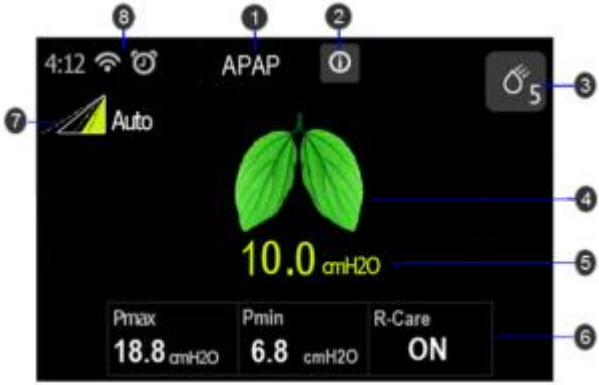


Figure2 Patient Therapy Interface

| # | Description |
|---|---|
| 1 | The current therapy mode. |
| 2 | Display the alarm messages. |
| 3 | Humidity adjustment shortcut key and humidity level.<br>Note: The humidity level is available when the humidity function is on. |
| 4 | Background breathing dynamic diagram. |
| 5 | The current therapy pressure. |
| 6 | The therapy parameters monitoring during therapy. |
| 7 | Ramp time dynamic diagram.<br>Note: Only available when the Ramp function is on. |
| 8 | Work status icon bar. |

### 9.2.3 Patient Comfort Setting

Press key in the Patient Standby interface to enter Patient Comfort Setting Interface.

Figure3 Patient Comfort Setting Interface

| Icon | Text | Description |
|---|---|---|
| | Preheat | Turn Preheat function on or off. When the Preheat is on, the humidifier starts preheating in the standby mode and the maximum preheating time is 30 minutes. In the therapy mode, the preheating stops.<br>Option: ON / OFF Default: OFF<br>Note:<br>1. If the humidifier water level below the limit, Preheat function will be turned off automatically.<br>2. If humidifier function is turned off, Preheat function will be disable.<br>3. Preheat function is not available in the RXiBreeze 20C. |
| | P Ramp | Set the starting pressure of Ramp.<br>Setting Range: 3 $cmH_2O$-Setting pressure, 0.5 $cmH_2O$ increments.<br>Default: 4 $cmH_2O$ |
| | Ramp Time | Set the increase time from Ramp pressure to the setting therapy pressure.<br>Option: 0-60 mins, 5 mins increments<br>Default: 15 mins<br>Note: if Ramp Time sets to 0 min, Ramp function will be off. |
| | Auto Start | Turn Auto Start function on or off.<br>When the Auto Start function is on, the system will start therapy automatically if a breath with mask is detected.<br>Option: On / OFF Default: ON |
| | Auto Stop | Turn Auto Stop function on or off.<br>When the Auto Stop function is on, if the mask is removed more than 5 seconds, the therapy mode will stop.<br>Option: On / OFF Default: ON |

| Icon | Text | Description |
|---|---|---|
| | IPR | Set IPR (Intelligence Pressure Release) level.<br>Option: OFF / 1-3 Default: 2 |
| | Tube Type | Set the Tube type.<br>Option: 15 mm / 19 mm Default: 15 mm |
| | Mask Type | Set the Mask type.<br>Option: Full Face / Nasal / Pillow Default: Nasal |

### 9.2.4 Patient System Setting

Press key in the Patient Standby interface to enter Patient Setting interface.

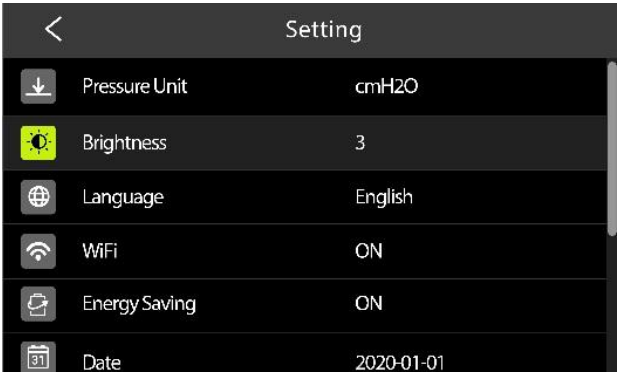


Figure4 Patient Setting Interface

| Icon | Text | Description |
|---|---|---|
| | Pressure Unit | Set the pressure unit.<br>Option: hPa / $cmH_2O$ Default: $cmH_2O$ |
| | Screen Brightness | Adjust the Screen Brightness.<br>Option: Auto / 1-3 Default: 2 |
| | Language | Set the system interface language.<br>Option:English / Spanish / French / German / Italian / Portuguese<br>Default: English.<br>Note: Not all the languages are available, the optional items depend on software version. |

| Icon | Text | Description |
|---|---|---|
| | Energy Saving | Set the Energy Saving function on or off.<br>When Energy Saving is on, the screen will be turned off automatically if there is no operation within 3 minutes in standby mode, or 30 seconds in therapy mode. If Energy Saving is off, the screen is always on.<br>Option: ON / OFF Default: ON |
| | Date | Set the system date.<br>Note:<br>1. Date setting can't be earlier than the latest time of the report in the device.<br>2. The system date is required to reset on the first time start up when the device is restored the factory default settings. |
| | Date Format | Set the system date format.<br>Option: YYYYMMDD / MMDDYYYY / DDMMYYYY<br>Default: YYYYMMDD |
| | Time | Set the system time.<br>Note: time setting can't be earlier than the latest time of the report in the device. |
| | Alarm Clock | Set the Alarm clock on or off, and the alarm time.<br>Option: ON / OFF Default: OFF |
| | Key Tone | Set the switch key tone volume on or off.<br>Option: ON / OFF Default: OFF |
| | Blue Network(optional) | Set the Blue Network function on or off.<br>Option: ON / OFF Default: OFF |
| | WiFi (optional) | Set the WiFi function on or off.<br>Option: ON / OFF Default: ON |

| Icon | Text | Description |
|---|---|---|
| | Reminder | Set the Reminder type and time. You can turn on or off the different type of reminders, including: Mask, Filter, Water tank, Tube, Clinic, Maintenance interval.<br>Option: ON / OFF Default: OFF<br>Note:<br>1. Set the date of reminder, will pop-up reminder box first time to enter standby mode in the day of setting reminder day.<br>2. Click OK to change the relevant accessories, and then no longer remind.<br>3. Click Ignore, the next day and next starting time will pop-up reminder box. |
| | About | Display the device informaiton including system version, serial number, blower running time etc.. |

### 9.2.5 Patient Report Menu

Press info key in Patient Standby Interface to enter Patient Report Interface.

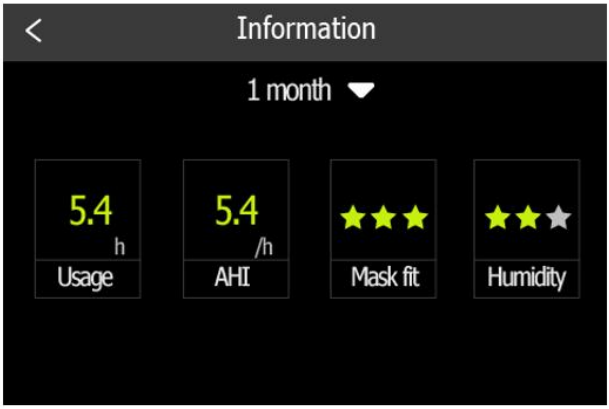


Figure5 Patient Report Interface

| Item | Description |
|---|---|
| Period | Set the time interval covered by the report.<br>Options: daily (for recent 6 days) / 7 days / 14 days / 1 month / 3 months / 6 months / 1 year. |
| Usage | Number of hours the device has been used in the selected period. |
| AHI | The average apnea-hypopnea index in the selected period. |

| Item | Description |
|---|---|
| Mask fit | Use three stars for rating the leakage of mask in the selected period.<br>★★★ The mask seal status is good.<br>★ The mask needs adjustments. |
| Humidify | Use three stars for rating the usage time of humidifier in the selected period.<br>★★★ Humidifier has been used more than 60% of the total therapy time.<br>★ Humidifier has been used less than 5% of the total therapy time. |

**9.2.6 SD Card**

The RXiBreeze PAP Systems comes with an SD card already inserted in the device to store therapy information for the home care provider.

Your home care provider may ask you to send the SD card to them for evaluation.

To remove the SD card:

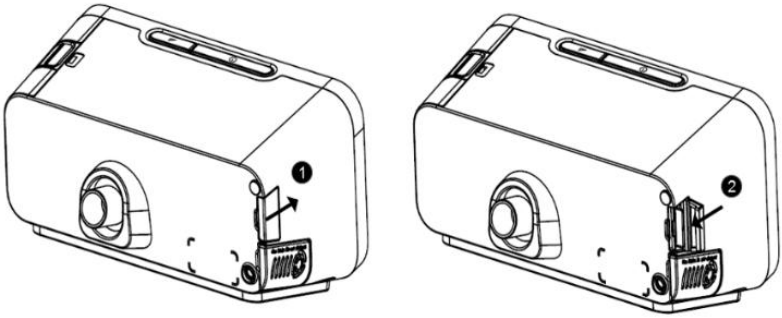


1. Stop therapy and open the SD card cover.
2. Push in the SD card to release it. Remove the SD card from the device.

Place the SD card in the protective folder and send it to your care provider.

**Note：**

1. Do not remove the SD card from the device during therapy.
2. Do not use the SD card for any other purpose.
3. This device can use only manufacturer SD card. Please contact your supplier for purchasing.

**9.2.7 Wireless transmission module**

**9.2.7.1 Wifi module connection**

There are 2 methods for the device to match WiFi network， connect to the network through APP or connect to the network through the device.

**Method 1：Connect to the network through APP**

❶Power on and start up the device，enter the setting interface—Wifi—set to On.
❷Download “ResAssist” APP，IOS system downloads from the“App store”，Android system downloads from the “Google Play”.Register for an account after downloading is finished. Step 1，use the mobile phone number or email to register a new account number；Step 2，use the serial number of the device to register the user information, complete the two steps and then registered successfully.
❸Log in “ResAssist” APP with the registered account，turn on the Bluetooth of your phone，click the “My” icon in the lower right corner—“WIFI settings”，enter Wifi setting interface.
❹Follow the steps on the APP interface，match Wifi network to the device，until Wifi connected successfully.
❺Sign of Wifi connected successfully：ResAssist APP shows“Connection successful”or there is a icon on the standby interface to reminder the connection is successful，the icon is .

**Method 2：Connect to the network through the device**

❶Power on and start up the device，enter the setting interface—Wifi—set to On.
❷WiFi interface on the device，click “search”—search for the WiFi signals nearby—enter the WiFi list interface.
❸Click on an available Wifi—enter the Wifi password input interface，enter the correct password -- until Wifi connected successfully.
❹Sign of connection successful：Wifi status is connected，Wifi status icon is .

**9.2.7.2 Usage of Wifi module**

❶The method for the device to connect WiFi network is through APP or through the device.
❷Press the Therapy On/Off key on top of the device to turn on airflow and begin therapy.
❸The device ventilation effectively（Put on the mask and breathe normally）for a period of time and then stop it，Wifi connect normally and begin to upload data，Wifi icon signs an up arrow in the lower right corner.
❹After data upload，log in the Cloud，view the treatment data uploaded from the cloud.

**9.2.7.3 Wifi status sign**

❶Wifi Off — no Wifi sign
❷Wifi On，WLAN hotspots unconnected
❸Wifi On，WLAN hotspots connected but inaccessible to the sever
❹Wifi connect normally
❺Wifi upload data

## 10 Device Alert

There are 4 types of alerts described here:：

- **Alert 0**: Gray bottom white tips, no light, no sound, always display, disappear until the prompt condition not met.
- **Alert 1**: Orange bottom white tips, blue-ray flashing, with sound, always display, disappear until the prompt condition not met.

- **Alert 2**: Red bottom white tips, blue-ray flashing, with sound, exclusive alarm until the user opens the alert to confirm or press the Therapy On/Off key.
- **Notification**: White reminder message, no light, no sound, after the corresponding process, the message automatically disappears.

Alert Summary Table: The following table summarizes the alerts.

| Alert | Type | Possible Cause | Action |
|---|---|---|---|
| Input voltage is abnormal, please check! | Alert 2 | Power Adapter with the wrong type, resulting in voltage is too high or too low | Use the Power Adapter provided by Resvent. |
| SD card write/read underway, do not remove the SD card, do not cut off the power. | Notification | 1. Insert SD card during data synchronization;<br>2. Input the configuration on the SD card. | No action. |
| SD Card Removed. | Notification | 1. No SD card in the device.<br>2. SD card has been removed. | Reinsert functional SD card. |
| SD Card Full, Please replace the SD Card. | Notification | In Standby mode, SD card storage space only 200M | Replace the SD card or clean the data after export the data in the SD card. |
| SD card can’t be written, please unlock and insert again. | Notification | The SD card is read-only and can’t be written. | Remove the SD card, unlock and insert it again. |
| SD card error, please remove and insert again. | Notification | SD card failure, may be: 1.SD card can’t read and write.<br>2.SD card read and write data errors. | Remove SD Card, Reinsert or replace with a new card. |
| Non-original card,continue using please format. | Notification | Insert other device' SD card in non-service mode. | Format the SD card in your computer and then insert it to device. |

| Alert | Type | Possible Cause | Action |
|---|---|---|---|
| Software update underway, Do not cut off the power! | Notification | Software update. | No action. |
| System error code: XXXX Please try to restart, please contact the supplier if repeat. | Alert 2 | 1. Pressure sensor failure, flow sensor failure, blower failure in therapy state; 2. Power board short-circuit 3. Humidifier heating circuit short-circuit | Please try to restart, please contact the supplier if repeat. |
| The respiration tube expired, please replace. | Notification | In standby state, the usage time exceed the respiration tube setting service life. | Click “Confirm”, replace the respiration tube. |
| The water tank expired, please replace. | Notification | In standby state, the usage time exceed the water tank setting service life. | Click “Confirm”, replace the water tank. |
| The filter expired, please replace. | Notification | In standby state, the usage time exceed the filter setting service life. | Click “Confirm”, replace the filter |
| The mask expired, please replace. | Notification | In standby state, the usage time exceed the mask setting service life. | Click “Confirm”, replace the mask |
| It is time for device maintenance, Please contact the service provider for device maintenance. | Notification | In standby state, the usage time exceed the setting device maintenance time. | Click “Confirm”, contact the service provider for device maintenance. |
| Apnea. | Alert 1 | An apnea is detected and exceeds the setting duration. | Check the respiration tube or adjust therapy parameter setting. |
| Mask vent holes blocked. | Alert 1 | Mask vent holes is blocked. | Check the mask. |
| System Drying | Notification | The device generates a small flow to dry the system when it is the standby mode after 30 | No action. |

| Alert | Type | Possible Cause | Action |
|---|---|---|---|
| | | minutes usage with humidification. | |
| RTC clock failure. Reports may not be saved. | Alert1 | RTC clock failure. | Please contact the supplier if you want reports be saved. |

**Note:** Some alert messages depend on the device model.

## 11 Troubleshooting

If your device has the following problems in the usage, please try the following measures. If it can't be resolved, please contact the maintenance provider.

| Problem | Possible Cause | Action |
|---|---|---|
| Nothing happens when you apply power to the device. The backlights on the keys do not light. | There's no power at the outlet or the device is unplugged. | Check the outlet and verify that the device is properly plugged in. Make sure there is power available at the outlet. Make sure the AC power cord is connected correctly to the power supply and the power supply cord is securely connected to the device's power inlet. If the problem continues to occur, contact your home care provider. Return both the device and power supply to your provider, so they can determine if the problem is with the device or power supply. |
| Air is leaking from around my mask | Mask may be fitted incorrectly. | Make sure your mask is fitted correctly. See your mask user guide for fitting instructions or use the Mask Fit function to check your mask fit and seal. |
| I am getting a dry or blocked nose | Humidity level may be set too low. | Adjust the Humidity Level. |
| I am getting droplets of water on my nose, in the mask and air tubing | Humidity level may be set too high. | Adjust the Humidity Level. |
| My mouth is very dry and uncomfortable | Air may be escaping through your mouth. | Increase the Humidity Level.<br>You may need a chin strap to keep your mouth closed or a full face mask. |

| Problem | Possible Cause | Action |
|---|---|---|
| Air pressure in my mask seems too high (it feels like I am getting too much air). | Ramp may be turned off. | Use the Ramp Time option. |
| Air pressure in my mask seems too low (it feels like I am not getting enough air). | Ramp may be in progress. | Wait for air pressure to build up or turn Ramp Time off. |
| I have stopped therapy, but the device is still blowing air. | Device is cooling down. | Device blows a small amount of air in order to avoid condensation in the air tubing. It will stop automatically after a few minutes. |
| The device's display is erratic (crash blank or blue screen). | The device has been dropped or mishandled. | Unplug the device. Reapply power to the device. If the problem continues, contact your home care provider. |
| My water tank is leaking. | Water tank may not be assembled correctly.<br>Water tank may be damaged or cracked. | Check for damage and reassemble the water tank correctly. Contact your care provider for a replacement. |
| Key exception (non-responsive or insensitive). | Program crashes or key misalignment. | Unplug the device. Reapply power to the device. If the problem continues, contact your home care provider. |
| The knob is insensitive. | Encoder is damaged | Unplug the device. Reapply power to the device. If the problem continues, contact your home care provider. |

## 12 Cleaning and Maintaining

The machine needs to be cleaned and disinfected regularly so that these germs and contaminants do not grow inside of your equipment and make you sick. Dust and dirt can also cause problems with the machine, making it more likely to break or need replacement. Please strictly follow the cleaning and disinfection process below:

### 12.1 Cleaning and Disinfection Process and Schedule for Device Surface

## 1 Cleaning

**WARNING:** To avoid electrical shock, always unplug the power cord from the wall outlet before cleaning the device. Do not immerse the device in any fluids.

1. Please power off and unplug of the device, and throughout cleaning the casing of the device to removal of soil, stain or oil by using a soft cloth slightly dampened with neutral detergent (such as, 5% soapsuds)
2. Use a soft cloth slightly dipped in water to wipe and rinse the surface that was cleaned with soapy water in the previous step for 5 minutes, and repeat the above steps at least additional 2 times, three times in total.
3. Visual inspection the casing of the device, ensure there is no soil, stain or oil is seen. If there is determined not to be visually cleaned at the end of the cleaning steps. You should either repeat the relevant previous cleaning steps, so that a visible soiled device is not used again.
4. Wait about at lest 1 minutes for drying completely before plugging in the power cord.

## 2 Disinfection

1. After the cleaning procedure, use an 75% ethyl alcohol swab or cotton swab moistened with 75% ethyl alcohol to disinfect the device surface for about 5 minutes.
2. Repeat the above steps at least 3 times, then wipe surface dry with a clean cloth, and wait about 1 minute for drying after disinfection process.

## 3 Drying

Allow sufficient time for the device to air dry completely.

Note: Drying is not required after cleaning if disinfection is continued immediately.

## 4 Inspection

Perform a visual inspection of the device casing. If any visible deterioration is apparent (cracking, crazing etc) discontinue use and contact your care provider or Resvent.

### 12.2 Cleaning and Disinfection Process and Schedule for (Water tank, air outlet adaptor, air outlet of water tank)

## 1 Cleaning

1. Remove all detachable parts from the device. Make a solution of a neutral detergent (such as, soapsuds) and water.
2. Soaked all components for about 5-10 minutes. Agitate the component in the cleaning solution to ensure there are no air bubbles
3. Clean the inside and outside of all components with a soft bristle brush while soaking in a detergent solution. Pay particular attention to all crevices and cavities
4. Soaking all the components in the solution,and through rinse each component in the rinsing water to ensure there are no air bubbles. Repeat the rinse procedure two additional times using fresh water for a total of three rinses.
5. Visual inspection to ensure there is no soil, stain or oil is seen. If there is determined not to be visually cleaned at the end of the cleaning steps. You should either repeat the relevant previous cleaning steps, so that a visible soiled device is not used again.
6. Shake the component to remove excess water, and allow the component to air dry rather out of direct sunlight.

**Note:** Failure to clean the component as indicated may result in inadequate disinfection.

## 2 Disinfection

**WARNING: The disinfection process must be carried out after cleaning process.**

1. After the cleaning procedure, immerse the component in a water bath, and make a solution of a 3% hydrogen peroxide, Soak the components in the solution at room temperature for at least 30 minuets. Rinse and agitate the component in the solution for 1 minutes
2. Soaking all the components in the solution,and rinse and agitate the component in a fresh water thoroughly for at least 3 times, 10 minutes per time and hang up to allow to air dry but out of direct sunlight or heat.
3. Perform a visual inspection of the device components. If any visible deterioration is apparent (cracking, crazing etc) discontinue use and contact your care provider or Resvent.

### 12.3 Cleaning Schedule

To avoid prolonged exposure to dusty and humid environment, resulting in impaired performance and reliability, the user must clean the device regularly. The clean interval of the device and accessories, please refer the below table:

| Interval | Action |
|---|---|

| Interval | Action |
|---|---|
| Weekly | Clean the device casing.<br>Clean the water tank, air outlet adaptor, air outlet of water tank |

### 12.4 Disinfection Schedule

To avoid germs and allergens growing inside of your equipment and making you sick, the user must disinfect the device regularly. The disinfection interval of the device and accessories, please refer the below table:

| Interval | Action |
|---|---|
| Monthly | Disinfect the water tank<br>Disinfect the air outlet adaptor<br>Disinfect air outlet of water tank |

### 12.5 Installing/Replacing the Air Filter

The device comes with a reusable air filter, it must be in place at all times when the device is operating. Please check the air filter every 1-3 months, clean or replace it if there are any holes or blockages by dirt or dust.

**Note:** When you receive your device, if the filter cotton is not installed, you must install the filter cotton before using the device.

To install or replace the air filter, please follow the below steps:

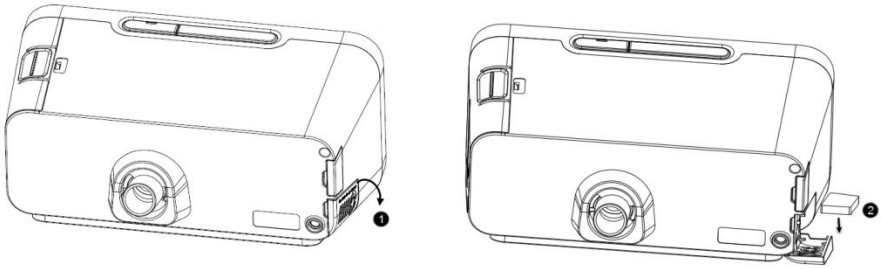

1. Open the air filter cover.
2. Place a filter cotton onto the air filter cover and then close it.
   If replacing, remove the old filter cotton and then place a new one.

### 12.6 Traveling with the Device

Use the Resvent travel bag to carry the device and accessories when traveling.

Please follow the below steps for packing:

1. Remove the water tank from the device and pour out all water.
2. Install the water tank back on the device.
3. Put the device and accessories in the travel bag.

### 12.7 Device Maintenance

No regular maintenance is required. If you notice abnormal running of the device, abnormal sounds, device or power supply drops from the tabletop, or have mistakenly operated, liquid has entered the device and the cover has ruptured, disconnect the power and contact your supplier.

## 13 Maintenance

RESVENT CPAP therapy device is designed to have a useful service life of 10 years. If the therapy device is used as intended in accordance with the instructions for use, it does not require any maintenance within this period. If the therapy device is used beyond this period, we recommend having it checked by an authorized dealer. If the respiratory air humidifier is used as intended in accordance with these instructions for use, it does not require any maintenance. If you identify faulty parts during the function check, please contact your authorized dealer immediately.

## 14 Storage and Disposal

### 14.1 Storage

#### 14.1.1 Storage Information

Store the device under the prescribed ambient conditions.

#### 14.1.2 Storing the therapy device.

- Switch off the therapy device.
- Disconnect the therapy device from the power supply.
- Clean the therapy device, components, and accessories.
- Store the therapy device, components, and accessories in a dry place.

### 14.2 Disposal

Electronic waste

Do not dispose of the product in the household waste. Consult an authorized, certified electronic waste recycling company for proper disposal. You can find out their address from your environmental officer or from your local council.
The device packaging (cardboard box and inserts) can be disposed of as waste paper.

**Risk of injury if disposable items are reused!**

Disposable items are only intended to be used once. Reused disposable items may be contaminated and/or not functions correctly and thus cause patient injury.

## 15 Specification

### Physical

Dimension (L*W*H): 238*178*128 mm
Weight: Approximately 1.60 kg

### Operating Environmental

Temperature: 5℃~35℃
Relative Humidity: 10%~95% (non-condensing)
Atmospheric Pressure: 70 kPa~106 kPa

### Storage Environmental

Temperature: -25℃~70℃
Relative Humidity: 5%~95% (non-condensing)
Atmospheric Pressure: 70 kPa~106 kPa

### Noise Value

| Sound pressure level | Uncertainty | Sound power level | Uncertainty |
|---|---|---|---|
| 30 dB(A) | 2 dB(A) | 38 dB(A) | 2 dB(A) |

### Standards Compliance

IEC60601-1：2005+A1：2012 Medical electrical equipment - Part 1: General requirements for basic safety and essential performance
IEC60601-1-2：2014 Medical electrical equipment - Part 1-2: General requirements for basic safety and essential performance - Collateral Standard: Electromagnetic disturbances - Requirements and tests
ISO 80601-2-70：2020 Medical electrical equipment — Part 2-70: Particular requirements for the basic safety and essential performance of sleep apnoea breathing therapy equipment
ISO 80601-2-74:2021 Medical electrical equipment — Part 2-74: Particular requirements for basic safety and essential performance of respiratory humidifying equipment
IEC60601-1-11：2015 Medical electrical equipment - Part 1-11: General requirements for basic safety and essential performance - Collateral Standard: Requirements for medical electrical equipment and medical electrical systems used in the home healthcare environment

### Electrical

Specified power supply: Resvent Medical Technology Co., Ltd.
Model: MDA60-220S24-W1
AC Input: 100-240V～1.18-0.56A 50/60Hz 2A Max
DC Output: 24 V⎓2.5 A
Specified power supply: Shenzhen Longxc Power Supply Co.,LTD
Model: LXCP61(Ⅱ)-024300
AC Input: 100-240～50/60Hz 1.5A Max
DC Output: 24.0V⎓3.0A

**Safety Specifications**

Class II
Type BF
Ingress Protection: IP22

**Air filter**

Air filter: Filter Efficiency: >75% (7 micron dust)

**Pressure**

Setting Range: 4-20 $cmH_2O$
Max Single Fault Steady Pressure: 40 $cmH_2O$
Static Pressure Accuracy: ±0.5 $cmH_2O$ (Expanded uncertainty:1.87%)
Dynamic Pressure Accuracy: ±1$cmH_2O$ (Expanded uncertainty:2.55%)
Pressure monitoring Accuracy: ± (2%*full scale reading + 4%*actual reading)

**Flow**

| | | Test pressure ($cmH_2O$) | | | | |
|---|---|---|---|---|---|---|
| | | 4 | 8 | 12 | 16 | 20 |
| 19mm breathing tubing | Measured pressure at the patient connection port ($cmH_2O$) | 2.9 | 7.1 | 11.0 | 15.1 | 19.1 |
| | Average flow at the patient connection port (L/min) | 154.3 | 146.4 | 135.7 | 125.3 | 114.1 |
| 15mm breathing tubing | Measured pressure at the patient connection port ($cmH_2O$) | 2.9 | 6.9 | 10.8 | 14.8 | 18.7 |
| | Average flow at the patient connection port (L/min) | 141.4 | 132.7 | 124.2 | 114.3 | 85.4 |

**Humidifier**

Water capacity: 290 ml (MAX Water Level)
Humidity: >10 mg/L BTPS (Within the set pressure range)

## 16 EMC Declaration

Essential Performance：

CPAP mode: work pressure 10 $cmH_2O$.

The CPAP system is intended for use in the specified electromagnetic environment listed in form A-1, A-2 and A-3. The customer or the user of CPAP system should assure that it is used in such an environment as described below.

The CPAP system is intended for use in an electromagnetic environment in which radiated RF disturbance are controlled. The customer or the user of CPAP system can help prevent electromagnetic interference by maintaining a minimum distance between portable/mobile RF communications equipment (transmitters) and the CPAP system (as recommended in form A-3) , according to the maximum output power of the communications equipment.

Form A-1 Guidance and Declaration - Electromagnetic Emissions

| Emissions test | Compliance | Electromagnetic environment - guidance |
|---|---|---|
| Radiated emissions<br>CISPR11 | Group 1 | The CPAP system uses RF energy only for its internal function. Therefore, its RF emissions are very low and are not likely to cause any interference in nearby electronic equipment. |
| Conducted emissions<br>CISPR11 | Class B | The CPAP system is suitable for use in all establishments, including domestic establishments and those directly connected to the public low-voltage power supply network that supplies buildings used for domestic purposes. |
| Harmonic emissions<br><br>IEC 61000-3-2 | Class A | |
| Voltage fluctuations/flicker emissions<br>IEC61000-3-3 | Complies | |

Form A-2 Guidance and Declaration - Electromagnetic Immunity

| Immunity test | IEC60601test level | Compliance level | Electromagnetic environment - guidance |
|---|---|---|---|
| Electrostatic discharge（ESD） IEC61000-4-2 | Contact：±8kV<br>Air：±15 kV | Contact：±8 kV<br>Air：±15V | Floors should be wood、concrete or ceramic tile. If floors are covered with synthetic material, the relative humidity should be at least 30%. |
| Electrical fast transient/burst IEC61000-4-4 | Power supply lines：±2 kV<br>input/output lines：±1 kV | Power supply lines：±2 kV<br>input/output lines：±1 kV | Mains power quality should be that of a typical commercial or hospital environment. |
| Surge IEC61000-4-5 | line(s) to line(s)：±1 kV<br>line(s) to earth：±2 kV | line(s) to line(s)：±1 kV<br>line(s) to earth：±2 kV | Mains power quality should be that of a typical commercial or hospital environment. |
| Voltage dips, short interruptions and voltage variations on power supply input lines IEC61000-4-11 | 0%, 70%, 0% of UT | 0% for 0.5 cycle<br>0% for 1 cycle<br>70% for 25 cycles<br>0% for 250 cycles | Mains power quality should be that of a typical commercial or hospital environment. |
| Power frequency（50/60Hz） magnetic field IEC61000-4-8 | 50Hz,60Hz 30A/m | 50Hz:30A/m<br>60Hz:30A/m | Mains power quality should be that of a typical commercial or hospital environment. |
| Conduced RF IEC61000-4-6 | 150KHz to 80MHz 3Vrms ISM and amateur radio bands between 150KHz to 80MHz 6Vrms | 3Vrms<br>6Vrms (in ISM and amateur radio bands)<br>80% AM at 1kHz. | Portable and mobile RF communications equipment should be used no closer to any part of the CPAP system, including cables, than the recommended separation distance |

| Immunity test | IEC60601test level | Compliance level | Electromagnetic environment - guidance |
|---|---|---|---|
| | | | calculated from the equation appropriate for the frequency of the transmitter. Recommended separation distances: $d=0.35\sqrt{P}$ $d=1.2\sqrt{P}$ |
| Radiated RF IEC61000-4-3 | 80MHz to 2700MHz 10V/m (rms)<br>385MHz 27V/m (rms)<br>450MHz 28V/m (rms)<br>710MHz, 745MHz, 780MHz 9V/m (rms)<br>810MHz, 870MHz, 930MHz 28V/m (rms)<br>1720MHz, 1845MHz, 1970MHz 28V/m (rms)<br>2450MHz 28V/m (rms)<br>5240MHz, 5500MHz, 5785MHz 9V/m (rms) | 10V/m, 80% AM at 1kHz<br>27V/m PM at 18Hz<br>28V/m FM ± 5 kHz deviation at 1kHz sine<br>9V/m PM at 217 Hz<br>28V/m PM at 18Hz<br>28V/m PM at 217 Hz<br>28V/m PM at 217 Hz<br>9V/m PM at 217 Hz | 80MHz to 800MHz：$d=1.2\sqrt{P}$<br>800MHzto 2.5GHz：$d=2.3\sqrt{P}$<br>Where, P is the maximum output power rating of the transmitter in watts (W) according to the transmitter manufacturer and d is the recommended separation distance. Field strengths from fixed RF transmitters, as determined by an electromagnetic site survey, should be less than the compliance level in each frequency range. Interference may occur in the vicinity of equipment marked with the following symbol: |

Form A-3.Recommended Separation Distance between Portable/Mobile RF Communications Equipment and the CPAP system.

| Rated maximum output power of transmitter(W) | Separation distance in meters (m) according to frequency of the transmitter | | |
|---|---|---|---|
| | 150kHz~80MHz $d=1.2\sqrt{P}$ | 80MHz-800MHz $d=1.2\sqrt{P}$ | 800MHz-2.5GHz $d=2.3\sqrt{P}$ |
| 0.01 | 0.12 | 0.12 | 0.23 |
| 0.1 | 0.38 | 0.38 | 0.73 |
| 1 | 1.2 | 1.2 | 2.3 |
| 10 | 3.8 | 3.8 | 7.3 |
| 100 | 12 | 12 | 23 |

## Statement

Resvent Medical Technology Co., Ltd. (hereinafter called "Resvent") owns the intellectual property rights to this manual. Resvent intends to maintain the contents of this manual and confidential information.
This manual serves as a reference. The instruction in this manual is not intended to supersede the health care professional's instructions regarding the use of the device. Disclosure of the information in this manual in any manner whatsoever without the written permission of Resvent. Release, amendment, reproduction, distribution, rental, adaptation or any other derivative work of this manual in any manner whatsoever without the written permission of Resvent is strictly forbidden.
All information contained in this manual is believed to be correct. Resvent shall not be liable for errors contained herein or for incidental or consequential damages in connection with the furnishing, performance, or use of this manual. Contents of this manual are subject to change without prior notice.

## Limited Warranty

Resvent warrants that the system shall be free from defects of workmanship and materials and will perform in accordance with the product specifications within the warranty period. During the warranty time, if the product fails to perform in accordance with the product specifications, Resvent will repair or replace – at its option – the defective material or part. Resvent will pay customary freight charges from Resvent to the dealer location only. This warranty does not cover damage caused by accident, misuse, abuse, alteration, water ingress, and other defects not related to material or workmanship.
To exercise your rights under this warranty, contact your local authorized dealer or Resvent.

Issue date: Decembe., 2020
© Resvent Medical Technology Co., Ltd. All rights reserved
H-4000-000002-00 V5.1

**Contact information**

Resvent Medical Technology Co., Ltd.
BC601, BC602, Gaoxinqi Factory, District 67, Xingdong Community,Xin'an Street, Bao'an District, 518100 Shenzhen, PEOPLE'S REPUBLIC OF CHINA

Tel: 0086-755-23027370
Fax: 0086-755-23027370
http://www.resvent.com

# Quick Operation Guide

1

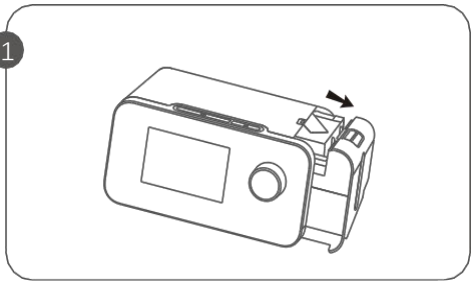

Remove the humidifier chamber.

2

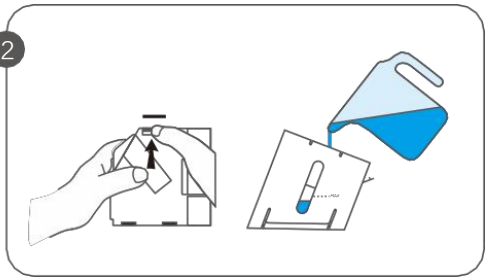

Open the lid, fill pour water to the maximum mark.

3

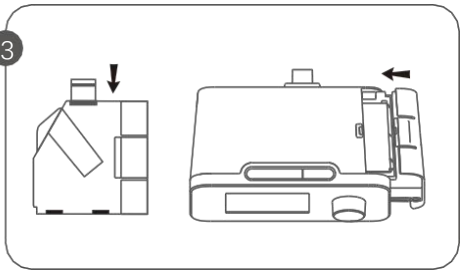

Close the lid and insert the chamber back.

4

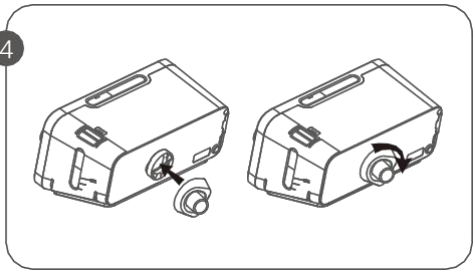

Lock the outlet onto back of device by turning outlet clockwise.

5

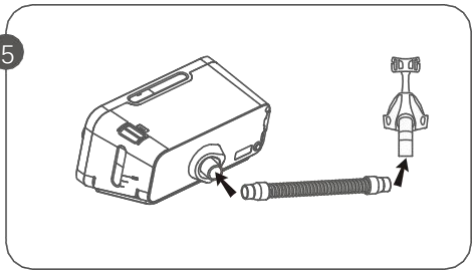

Connect one side of the tube to the air outlet and mask at the other end.

6

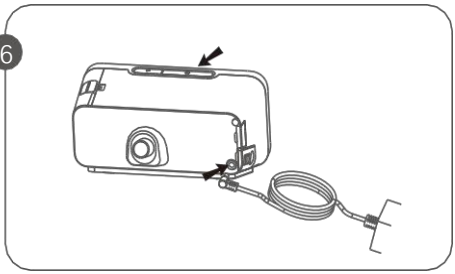

Connect the power supply to the device. Fit mask and press start button to initiate therapy.