Shenzhen Huatongwei International Inspection Co.,Ltd.
Huatongwei 101, No.006, Keji south 12th Road, High-tech zone community, Yuehai Street, Nanshan District, Shenzhen, Guangdong, China
Phone:86-755-26715499 E-mail: cs@szhtw.com.cn Website:http://www.szhtw.com.cn

FCC REPORT

For LTE

Report No. ..... :	**CHTEW23090003**
Project No……:	**SHT2308012301EW**
FCC ID ..... :	**2A6LY-0005**
Applicant ..... :	**Resvent Medical Technology Co., Ltd.**
Address.....:	BC601, BC602, Gaoxinqi Factory, District 67, Xingdong Community,Xin'an Street, Bao'an District, 518100 Shenzhen, PEOPLE'S REPUBLIC OF CHINA
Product Name ..... :	**RXiBreeze PAP System**
Trade Mark .....:	-
Model No. .....:	RXiBreeze 30STA
Listed Model(s) .....:	RXiBreeze 25S,RXiBreeze 25ST,RXiBreeze 30ST,RXiBreeze 25A,RXiBreeze 25STA
Standard ..... :	**FCC CFR Title 47 Part 2** **FCC CFR Title 47 Part 24 Subpart E** **FCC CFR Title 47 Part 27**
Date of receipt of test sample……..:	Aug.03, 2023
Date of testing……..:	Aug.03, 2023- Sep.01, 2023
Date of issue……..:	Sep.04, 2023
Result..... ……..:	**Pass**

Report Verification:

Compiled by (position+printedname+signature)...:	File administrator Kiki Kong
Supervised by (position+printedname+signature)....:	Project Engineer Kiki Kong
Approved by (position+printedname+signature)....:	RF Manager Xu Yang

Testing Laboratory Name ..... :	**Shenzhen Huatongwei International Inspection Co., Ltd.**
Address.....:	1/F, Bldg 3, Hongfa Hi-tech Industrial Park, Genyu Road, Tianliao, Gongming, Shenzhen, China

Shenzhen Huatongwei International Inspection Co., Ltd. All rights reserved.

This publication may be reproduced in whole or in part for non-commercial purposes as long as the Shenzhen Huatongwei International Inspection Co., Ltd. is acknowledged as copyright owner and source of the material. Shenzhen Huatongwei International Inspection Co., Ltd. takes no responsibility for and will not assume liability for damages resulting from the reader's interpretation of the reproduced material due to its placement and context.

The test report merely correspond to the test sample.

Contents

1.	**TEST STANDARDS AND REPORT VERSION**	**3**
1.1.	**Applicable Standards**	**3**
1.2.	**Report version information**	**3**
2.	**TEST DESCRIPTION**	**4**
3.	**SUMMARY**	**5**
3.1.	**Client Information**	**5**
3.2.	**Product Description**	**5**
3.3.	**Radio Specification Description**	**6**
3.4.	**Testing Laboratory Information**	**7**
4.	**TEST CONFIGURATION**	**8**
4.1.	**Test frequency list**	**8**
4.2.	**Test mode**	**9**
4.3.	**Test sample information**	**9**
4.4.	**Support unit used in test configuration and system**	**10**
4.5.	**Testing environmental condition**	**10**
4.6.	**Statement of the measurement uncertainty**	**11**
4.7.	**Equipments Used during the Test**	**12**
5.	**TEST CONDITIONS AND RESULTS**	**14**
5.1.	**Conducted Output Power**	**14**
5.2.	**Peak-to-Average Ratio**	**15**
5.3.	**99% Occupied Bandwidth & 26 dB Bandwidth**	**16**
5.4.	**Band Edge**	**17**
5.5.	**Conducted Spurious Emissions**	**18**
5.6.	**Frequency stability VS Temperature measurement**	**19**
5.7.	**Frequency stability VS Voltage measurement**	**20**
5.8.	**ERP and EIRP**	**21**
5.9.	**Radiated Spurious Emission**	**22**
6.	**TEST SETUP PHOTOS OF THE EUT**	**28**
7.	**EXTERNAL AND INTERNAL PHOTOS OF THE EUT**	**29**
7.1.	**External Photos**	**29**
7.2.	**Internal Photos**	**32**
8.	**APPENDIX REPORT**	**34**

1. TEST STANDARDS AND REPORT VERSION

1.1. Applicable Standards

The tests were performed according to following standards:

FCC CFR Title 47 Part 2: Frequency Allocations and Radio Treaty Matters; General Rules and Regulations

FCC CFR Title 47 Part 24 Subpart E: Broadband PCS

FCC CFR Title 47 Part 27: Miscellaneous Wireless Communications Services

ANSI C63.26-2015: American National Standard for Compliance Testing of Transmitters Used in Licensed Radio Services

KDB 971168 D01 Power Meas License Digital Systems v03: MEASUREMENT GUIDANCE FOR CERTIFICATION OF LICENSED DIGITAL TRANSMITTERS

1.2. Report version information

Revision No.	Date of issue	Description
N/A	2023-09-04	Original

2. TEST DESCRIPTION

Section	Test Item	Section in CFR 47	Result #1	Test Engineer
5.1	Conducted Output Power	Part 2.1046 Part 22.913(a) Part 24.232(c) Part 27.50	Pass	kongyongshu
5.2	Peak-to-Average Ratio	Part 24.232 Part 27.50	Pass	kongyongshu
5.3	99% Occupied Bandwidth & 26 dB Bandwidth	Part 2.1049 Part 22.917(b) Part 24.238(b) Part 27.53	Pass	kongyongshu
5.4	Band Edge	Part 2.1051 Part 22.917 Part 24.238 Part 27.53	Pass	kongyongshu
5.5	Conducted Spurious Emissions	Part 2.1051 Part 22.917 Part 24.238 Part 27.53	Pass	kongyongshu
5.6	Frequency stability vs temperature	Part 2.1055(a)(1)(b) Part 22.355 Part 24.235 Part 27.54	Pass	kongyongshu
5.7	Frequency stability vs voltage	Part 2.1055(d)(1)(2) Part 22.355 Part 24.235 Part 27.54	Pass	kongyongshu
5.8	ERP and EIRP	Part 22.913(a) Part 24.232(b) Part 27.50	Pass	kongyongshu
5.9	Radiated Spurious Emissions	Part 2.1053 Part 22.917 Part 24.238 Part 27.53	Pass	Yifan Wang

Note:

#1: The test result does not include measurement uncertainty value

3. SUMMARY

3.1. Client Information

Applicant:	Resvent Medical Technology Co., Ltd.
Address:	BC601, BC602, Gaoxinqi Factory, District 67, Xingdong Community,Xin'an Street, Bao'an District, 518100 Shenzhen, PEOPLE'S REPUBLIC OF CHINA
Manufacturer:	Resvent Medical Technology Co., Ltd.
Address:	BC601, BC602, Gaoxinqi Factory, District 67, Xingdong Community,Xin'an Street, Bao'an District, 518100 Shenzhen, PEOPLE'S REPUBLIC OF CHINA
Factory:	Resvent Medical Technology Co., Ltd.
Address:	BC601, BC602, Gaoxinqi Factory, District 67, Xingdong Community,Xin'an Street, Bao'an District, 518100 Shenzhen, PEOPLE'S REPUBLIC OF CHINA

3.2. Product Description

Main unit information:	
Product Name:	RXiBreeze PAP System
Trade Mark:	-
Model No.:	RXiBreeze 30STA
Listed Model(s):	RXiBreeze 25,RXiBreeze 25ST,RXiBreeze 30ST,RXiBreeze 25A,RXiBreeze 25STA
Power supply:	DC 24.0V from adapter
Hardware version:	1.0
Software version:	V01.00.00
Accessory unit information:	
Adapter information:	Model:LXCP61(II)-024300 Input:100-240Va.c., 50/60Hz 1.5Amax. Output:24.0Vd.c., 3.0A

3.3. Radio Specification Description

Support Operating Band:	☒ LTE Band 2 ☒ LTE Band 4 ☒ LTE Band 12 ☒ LTE Band 13
Operating Frequency Range:	Please refer to note #2
Channel bandwidth:	Please refer to note #3
Uplink Modulation type:	☒ QPSK ☒ 16QAM ☐ 64QAM ☐ 256QAM
Downlink Modulation type:	☒ QPSK ☒ 16QAM ☒ 64QAM ☐ 256QAM
Antenna type:	FPC Antenna
Antenna gain [#4]:	1.19dBi

Note:

- ☒: means that this feature is supported; ☐: means that this feature is not supported
- #2: Operating frequency range is as follow:

LTE Band	Uplink frequency	Downlink frequency
LTE Band 2	1850.7 – 1909.3 MHz	1930.7 – 1989.3 MHz
LTE Band 4	1710.7 – 1754.3 MHz	2110.7 – 2154.3 MHz
LTE Band 12	699.7 – 715.3 MHz	729.7 – 745.3 MHz
LTE Band 13	779.5 – 784.5 MHz	748.5 – 753.5 MHz

- #3 Supported channel bandwidth is as follow:

LTE Band	1.4MHz	3MHz	5MHz	10MHz	15MHz	20MHz
LTE Band 2	√	√	√	√	√	√
LTE Band 4	√	√	√	√	√	√
LTE Band 12	√	√	√	√	-	-
LTE Band 13	-	-	√	√	-	-

√: means that this feature is supported; -: means that this feature is not supported

- #4: The antenna gain is provided by the applicant, and the applicant should be responsible for its authenticity, HTW lab has not verified the authenticity of its information

3.4. Testing Laboratory Information

Laboratory Name	Shenzhen Huatongwei International Inspection Co., Ltd.	
Laboratory Location	1/F, Bldg 3, Hongfa Hi-tech Industrial Park, Genyu Road, Tianliao, Gongming, Shenzhen, China	
Contact information:	Tel: 86-755-26715499 E-mail: cs@szhtw.com.cn http://www.szhtw.com.cn	
Qualifications	Type	Accreditation Number
	FCC	762235

4. TEST CONFIGURATION

4.1. Test frequency list

LTE Band 2

Test Frequency ID	Bandwidth [MHz]	N_{UL}	Frequency of Uplink [MHz]	N_{DL}	Frequency of Downlink [MHz]
Low Range	1.4	18607	1850.7	607	1930.7
	3	18615	1851.5	615	1931.5
	5	18625	1852.5	625	1932.5
	10	18650	1855	650	1935
	15 [1]	18675	1857.5	675	1937.5
	20 [1]	18700	1860	700	1940
Mid Range	1.4/3/5/10 15 [1]/20 [1]	18900	1880	900	1960
High Range	1.4	19193	1909.3	1193	1989.3
	3	19185	1908.5	1185	1988.5
	5	19175	1907.5	1175	1987.5
	10	19150	1905	1150	1985
	15 [1]	19125	1902.5	1125	1982.5
	20 [1]	19100	1900	1100	1980

NOTE 1: Bandwidth for which a relaxation of the specified UE receiver sensitivity requirement (TS 36.101 [27] Clause 7.3) is allowed.

LTE Band 4

Test Frequency ID	Bandwidth [MHz]	N_{UL}	Frequency of Uplink [MHz]	N_{DL}	Frequency of Downlink [MHz]
Low Range	1.4	19957	1710.7	1957	2110.7
	3	19965	1711.5	1965	2111.5
	5	19975	1712.5	1975	2112.5
	10	20000	1715	2000	2115
	15	20025	1717.5	2025	2117.5
	20	20050	1720	2050	2120
Mid Range	1.4/3/5/10/15/20	20175	1732.5	2175	2132.5
High Range	1.4	20393	1754.3	2393	2154.3
	3	20385	1753.5	2385	2153.5
	5	20375	1752.5	2375	2152.5
	10	20350	1750	2350	2150
	15	20325	1747.5	2325	2147.5
	20	20300	1745	2300	2145

LTE Band 12

Table 4.3.1.1.12-1: Test frequencies for E-UTRA channel bandwidth for operating band 12

Test Frequency ID	Bandwidth [MHz]	N_{UL}	Frequency of Uplink [MHz]	N_{DL}	Frequency of Downlink [MHz]
Low Range	1.4	23017	699.7	5017	729.7
	3	23025	700.5	5025	730.5
	5 [1]	23035	701.5	5035	731.5
	10 [1]	23060	704	5060	734
Mid Range	1.4/3 5 [1]/10 [1]	23095	707.5	5095	737.5
High Range	1.4	23173	715.3	5173	745.3
	3	23165	714.5	5165	744.5
	5 [1]	23155	713.5	5155	743.5
	10 [1]	23130	711	5130	741

NOTE 1: Bandwidth for which a relaxation of the specified UE receiver sensitivity requirement (TS 36.101 [27] Clause 7.3) is allowed.

LTE Band 13

Test Frequency ID	Bandwidth [MHz]	N_{UL}	Frequency of Uplink [MHz]	N_{DL}	Frequency of Downlink [MHz]
Low Range	5 [1]	23205	779.5	5205	748.5
	10 [1]	23230	782	5230	751
Mid Range	5 [1]/10 [1]	23230	782	5230	751
High Range	5 [1]	23255	784.5	5255	753.5
	10 [1]	23230	782	5230	751

NOTE 1: Bandwidth for which a relaxation of the specified UE receiver sensitivity requirement (TS 36.101 [27] Clause 7.3) is allowed.

4.2. Test mode

Test mode	Link mode

1) Antenna port conducted and radiated test items were performed according to KDB 971168 D01 Power Meas. License Digital Systems and ANSI C63.26 with maximum output power.
2) Radiated measurements were performed with rotating EUT in different three orthogonal test planes to find the maximum emission.

Test configuration is as follow:

Test Items	Bandwidth	Modulation	RB #		
			1	Half	Full
Conducted Output Power	#5	#6	○	○	○
Peak-to-Average Ratio	#5	#6	○	-	○
99% Occupied Bandwidth & 26 dB Bandwidth	#5	#6	-	-	○
Band Edge	#5	#6	○	-	○
Conducted Spurious Emission	#5	#6	○	-	-
Frequency Stability	#5	#6	-	-	○
ERP and EIRP	#5	#6	○	○	○
Radiated Spurious Emission	#5	#6	○	-	-

Note:

- #5: Test all kind of bandwith in section 3.3
- #6: Test all kind of uplink modulation in section 3.3
- ○: means that this configuration is chosen for testing
- -: means that this configuration is not test.
- The device is investigatedfrom 30MHz to10 times offundamental signal for radiated spurious emission test under different bandwidth,modulations and RB size/offset in exploratory test. Subsequently, only the worst case emissions(highest bandwidth,QPSK,and 1RB0) are reported.

4.3. Test sample information

Test item	HTW sample no.
Conducted test items	Please refer to the description in the appendix report
Radiated test items	YPHT23050542001

Note:

Conducted test items: Conducted Output Power, Peak-Average Ratio, 99% Occupied Bandwidth & 26 dB Bandwidth, Band Edge, Conducted Spurious Emissions, Frequency stability, ERP and EIRP

Radiated test items: Radiated Spurious Emission

4.4. Support unit used in test configuration and system

The EUT has been associated with peripherals and configuration operated in a manner tended to maximize its emission characteristics in a typical application.

The following peripheral devices and interface cables were connected during the measurement:

Whether support unit is used?				
✓ No				
Item	Equipment	Trade Name	Model No.	Other
1				
2				

4.5. Testing environmental condition

Voltage	VN=Nominal Voltage	
	VL=Lower Voltage	
	VH=Higher Voltage	
Temperature	TN=Normal Temperature	25 °C
	Extreme Temperature	From −30°C to + 50°C
Humidity	30~60 %	
Air Pressure	950-1050 hPa	

4.6. Statement of the measurement uncertainty

No.	Test Items	Measurement Uncertainty
1	Conducted Output Power	0.66
2	Peak-to-Average Ratio	-
3	99% Occupied Bandwidth & 26 dB Bandwidth	0.002%
4	Band Edge	1.68dB
5	Conducted Spurious Emissions	1.68dB
6	Frequency stability	0.02ppm
7	Radiated Spurious Emission	4.54dB for 30MHz-1GHz 5.10dB for above 1GHz

This uncertainty represents an expanded uncertainty expressed at approximately the 95% confidence level using a coverage factor of k=1.96.

4.7. Equipments Used during the Test

● RF Conducted test item							
Used	Test Equipment	Manufacturer	Equipment No.	Model No.	Serial No.	Last Cal. Date (YY-MM-DD)	Next Cal. Date (YY-MM-DD)
●	Spectrum Analyzer	Agilent	HTWE0286	N9020A	MY50510187	2022/08/25	2023/08/24
●	Spectrum Analyzer	Agilent	HTWE0286	N9020A	MY50510187	2023/08/22	2024/08/21
●	Radio communication tester	R&S	HTWE0287	CMW500	137688-Lv	2022/08/25	2023/08/24
●	Radio communication tester	R&S	HTWE0287	CMW500	137688-Lv	2023/08/25	2024/08/24
●	Test software	Tonscend	N/A	JS1120	N/A	N/A	N/A
●	T-Cock	Weinschel	HTWE0289	1580	SC329	2022/08/25	2023/08/24
●	T-Cock	Weinschel	HTWE0289	1580	SC329	2023/08/22	2024/08/21

● Auxiliary Equipment							
Used	Test Equipment	Manufacturer	Equipment No.	Model No.	Serial No.	Last Cal. Date (YY-MM-DD)	Next Cal. Date (YY-MM-DD)
●	Climate chamber	ESPEC	HTWE0254	GPL-2	N/A	2022/08/29	2023/08/28
●	Climate chamber	ESPEC	HTWS0715	GPL-2	N/A	2023/08/21	2024/08/20
●	DC Power Supply	Gwinstek	HTWE0274	SPS-2415	GER835793	N/A	N/A

● Radiated Spurious Emission							
Used	Test Equipment	Manufacturer	Equipment No.	Model No.	Serial No.	Last Cal. Date (YY-MM-DD)	Next Cal. Date (YY-MM-DD)
●	Semi-Anechoic Chamber	Albatross projects	HTWE0122	SAC-3m-01	C11121	2023/4/17	2026/4/16
●	Spectrum Analyzer	R&S	HTWE0098	FSP40	100597	2022/8/25	2023/8/24
●	Spectrum Analyzer	R&S	HTWE0098	FSP40	100597	2023/08/22	2024/08/21
●	Spectrum Analyzer	R&S	HTWE0385	N9020A	MY54486658	2022/8/25	2023/8/24
●	Spectrum Analyzer	R&S	HTWE0385	N9020A	MY54486658	2023/08/22	2024/08/21
●	Ultra-Broadband Antenna	SCHWARZBECK	HTWE0123	VULB9163	538	2021/4/6	2024/4/5
●	Horn Antenna	SCHWARZBECK	HTWE0126	BBHA 9120D	1011	2023/2/14	2026/2/13
●	Pre-Amplifer	CD	HTWE0071	PAP-0102	12004	2023/5/25	2024/5/24
●	Broadband Pre-amplifier	SCHWARZBECK	HTWE0201	BBV 9718	9718-248	2023/5/25	2024/5/24
●	Test Software	Audix	N/A	E3	N/A	N/A	N/A

● Auxiliary Equipment

Used	Test Equipment	Manufacturer	Equipment No.	Model No.	Serial No.	Last Cal. Date (YY-MM-DD)	Next Cal. Date (YY-MM-DD)
●	Radio communication tester	R&S	HTWE0287	CMW500	137688-Lv	2022/08/25	2023/08/24
●	Radio communication tester	R&S	HTWE0287	CMW500	137688-Lv	2023/08/25	2024/08/24
●	High pass filter	Wainwright	HTWE0297	WHKX3.0/18G-10SS	38	2023/05/15	2024/05/14
●	Band Stop filter	-	HTWE0039	N/A	N/A	2023/01/26	2024/01/25

5. TEST CONDITIONS AND RESULTS

5.1. Conducted Output Power

LIMIT

N/A

TEST CONFIGURATION

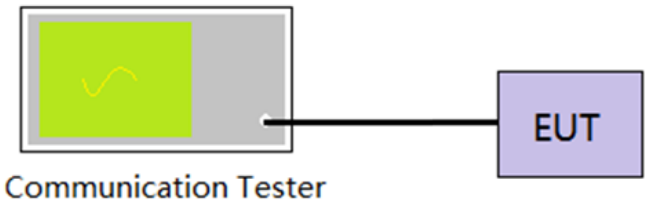

TEST PROCEDURE

1. The EUT output port was connected to communication tester.
2. Set EUT at maximum power through communication tester.
3. Select lowest, middle, and highest channels for each band and different modulation.
4. Measure the maximum burst average power.

TEST MODE

Please refer to the clause 4.2

TEST RESULTS

☒ **Passed** ☐ **Not Applicable**

TEST DATA

Refer to the appendix report

5.2. Peak-to-Average Ratio

LIMIT

13dB

TEST CONFIGURATION

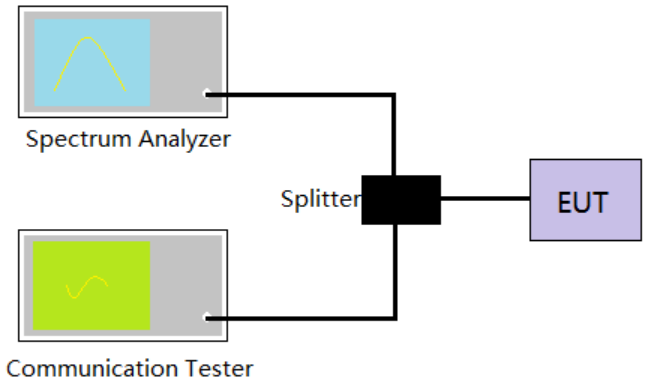

TEST PROCEDURE

1. The EUT was connected to the spectrum analyzer and communication tester via a power splitter
2. Set EUT in maximum power output.
3. Center Frequency = Carrier frequency, RBW > Emission bandwidth of signal
4. The signal analyzer was set to collect one million samples to generate the CCDF curve
5. The measurement interval was set depending on the type of signal analyzed.
   i. For continuous signals (>98% duty cycle), the measurement interval was set to 1ms.
   ii. For bursttransmissions, the spectrum analyzer is set to use an internal “ RF Burst” trigger that issynced with an incoming pulse and the measurement interval is set to less than the durationof the “ on time” of one burst to ensure that energy is only captured during a time in whichthetransmitter is operating at maximum power
6. Record the maximum PAPR level associated with a probability of 0.1%.

TEST MODE

Please refer to the clause 4.2

TEST RESULTS

☒ **Passed** ☐ **Not Applicable**

TEST DATA

Refer to the appendix report

5.3. 99% Occupied Bandwidth & 26 dB Bandwidth

LIMIT

N/A

TEST CONFIGURATION

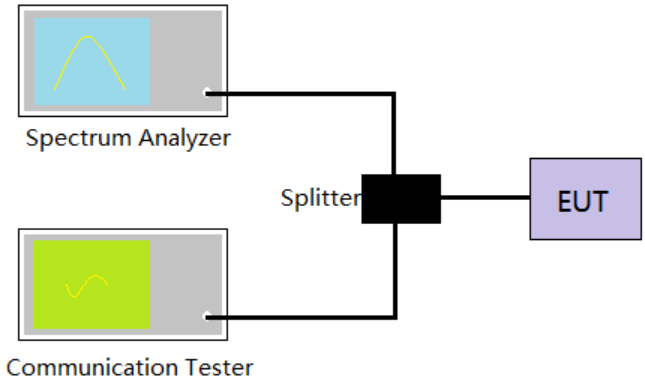

TEST PROCEDURE

1. The EUT was connected to the spectrum analyzer and communication tester via a power splitter
2. Set EUT in maximum power output.
3. Spectrum analyzer setting as follow:

   Center Frequency= Carrier frequency, RBW=1% to 5% of the anticipated OBW, VBW= 3 * RBW, Detector=Peak,

   Trace maximum hold.
4. Record the value of 99% Occupied bandwidth and 26dB bandwidth.

TEST MODE

Please refer to the clause 4.2

TEST RESULTS

☒ **Passed** ☐ **Not Applicable**

TEST DATA

Refer to the appendix report

5.4. Band Edge

LIMIT

Part 24.238 and Part 22.917 and Part 27.53 specify that the power of any emission outside of the authorized operating frequency ranges must be attenuated below the transmitting power (P) by a factor of at least 43 + 10 log(P) dB.

The specification that emissions shall be attenuated below the transmitter power (P) by at least 43 + 10 log (P) dB, translates in the relevant power range (1 to 0.001 W) to -13 dBm. At 1 W the specified minimum attenuation becomes 43 dB and relative to a 30 dBm (1 W) carrier becomes a limit of -13 dBm. At 0.001 W (0 dBm) the minimum attenuation is 13 dB, which again yields a limit of -13 dBm. In this way a translation of the specification from relative to absolute terms is carried out.

LTE Band 7

Part 27.53 m(4) For mobile digital stations, the attenuation factor shall be not less than 40 + 10 log (P) dB on all frequencies between the channel edge and 5 megahertz from the channel edge, 43 + 10 log (P) dB on all frequencies between 5 megahertz and X megahertz from the channel edge, and 55 + 10 log (P) dB on all frequencies more than X megahertz from the channel edge, where X is the greater of 6 megahertz or the actual emission bandwidth as defined in paragraph (m)(6) of this section.

TEST CONFIGURATION

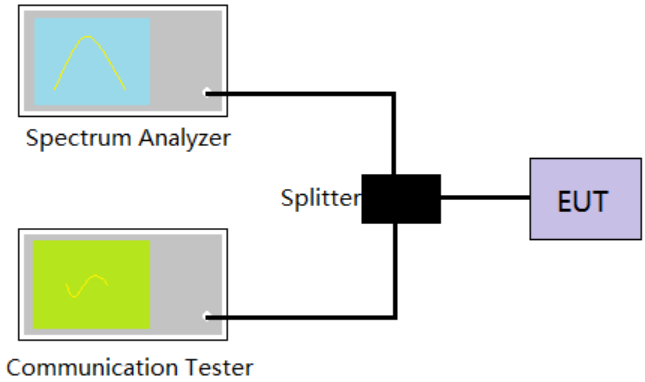

TEST PROCEDURE

1. The EUT was connected to the spectrum analyzer and communication tester via a power splitter
2. Set EUT in maximum power output.
3. The band edges of low and high channels were measured.
4. Spectrum analyzer setting as follow:
   RBW= no less than 1% of the OBW, VBW =3 * RBW, Sweep time= Auto
5. Record the test plot.

TEST MODE

Please refer to the clause 4.2

TEST RESULTS

☒ **Passed** ☐ **Not Applicable**

TEST DATA

Refer to the appendix report

5.5. Conducted Spurious Emissions

LIMIT

Part 24.238 and Part 22.917 and Part 27.53 specify that the power of any emission outside of the authorized operating frequency ranges must be attenuated below the transmitting power (P) by a factor of at least 43 + 10 log(P) dB.

The specification that emissions shall be attenuated below the transmitter power (P) by at least 43 + 10 log (P) dB, translates in the relevant power range (1 to 0.001 W) to -13 dBm. At 1 W the specified minimum attenuation becomes 43 dB and relative to a 30 dBm (1 W) carrier becomes a limit of -13 dBm. At 0.001 W (0 dBm) the minimum attenuation is 13 dB, which again yields a limit of -13 dBm. In this way a translation of the specification from relative to absolute terms is carried out.

LTE Band 7

Part 27.53 m(4) For mobile digital stations, the attenuation factor shall be not less than 40 + 10 log (P) dB on all frequencies between the channel edge and 5 megahertz from the channel edge, 43 + 10 log (P) dB on all frequencies between 5 megahertz and X megahertz from the channel edge, and 55 + 10 log (P) dB on all frequencies more than X megahertz from the channel edge, where X is the greater of 6 megahertz or the actual emission bandwidth as defined in paragraph (m)(6) of this section. In addition, the attenuation factor shall not be less that 43 + 10 log (P) dB on all frequencies between 2490.5 MHz and 2496 MHz and 55 + 10 log (P) dB at or below 2490.5 MHz. Mobile Satellite Service licensees operating on frequencies below 2495 MHz may also submit a documented interference complaint against BRS licensees operating on channel BRS Channel 1 on the same terms and conditions as adjacent channel BRS or EBS licensees. Limit <-25 dBm

TEST CONFIGURATION

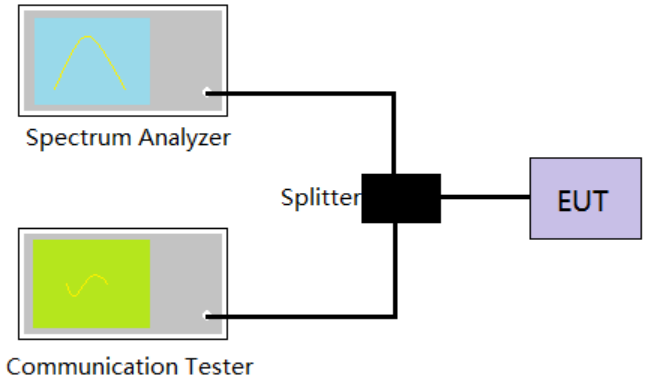

TEST PROCEDURE

1. The EUT was connected to the spectrum analyzer and communication tester via a power splitter
2. Set EUT in maximum power output.
3. Spectrum analyzer setting as follow:

   Below 1GHz, RBW=100KHz, VBW = 300KHz, Detector=Peak, Sweep time= Auto

   Above 1GHz, RBW=1MHz, VBW=3MHz, Detector=Peak, Sweep time= Auto

   Scan frequency range up to 10th harmonic.
4. Record the test plot.

TEST MODE

Please refer to the clause 4.2

TEST RESULTS

☒ **Passed** ☐ **Not Applicable**

TEST DATA

Refer to the appendix report

5.6. Frequency stability VS Temperature measurement

LIMIT

2.5ppm

TEST CONFIGURATION

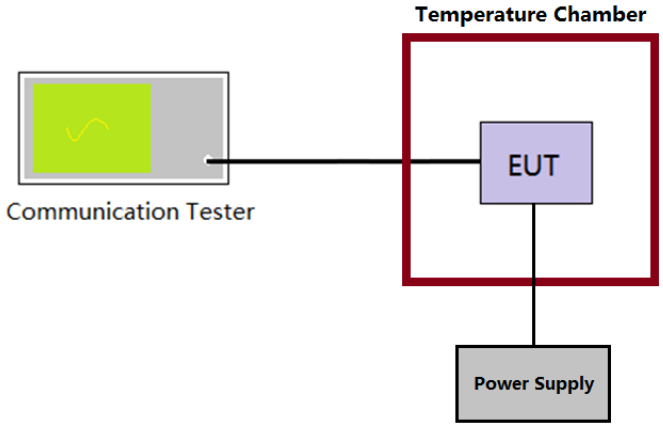

TEST PROCEDURE

1. The equipment under test was connected to an external DC power supply and input rated voltage.
2. The EUT output port was connected to communication tester.
3. The EUT was placed inside the temperature chamber.
4. Turn EUT off and set the chamber temperature to –30°C. After the temperature stabilized for approximately 30 minutes recorded the frequency.
5. Repeat step 4 measure with 10°C increased per stage until the highest temperature of +50°C reached.

TEST MODE

Please refer to the clause 4.2

TEST RESULTS

☒ **Passed** ☐ **Not Applicable**

TEST DATA

Refer to the appendix report

5.7. Frequency stability VS Voltage measurement

LIMIT

2.5ppm

TEST CONFIGURATION

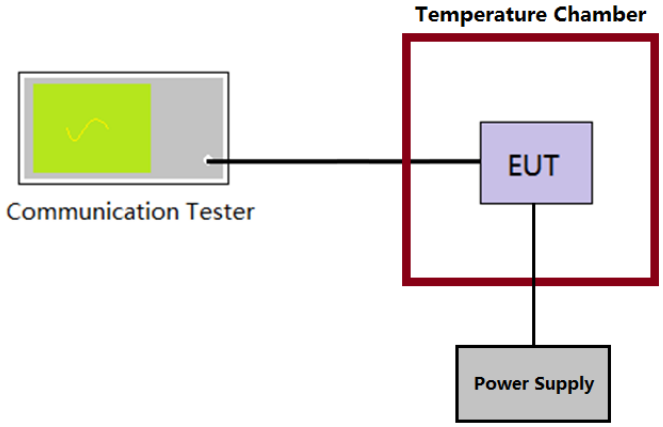

TEST PROCEDURE

1. The equipment under test was connected to an external DC power supply and input rated voltage.
2. The EUT output port was connected to communication tester.
3. The EUT was placed inside the temperature chamber at 25°C
4. The power supply voltage to the EUT was varied ±15% of the nominal value measured at the input to the EUT
5. Record the maximum frequency change.

TEST MODE

Please refer to the clause 4.2

TEST RESULTS

☒ **Passed** ☐ **Not Applicable**

TEST DATA

Refer to the appendix report

5.8. ERP and EIRP

LIMIT

LTE Band 2/7/25/38/41: 2W(33dBm) EIRP

LTE Band 4/66: 1W(30dBm) EIRP

LTE Band 5/26: 7W(38.50dBm) ERP

LTE Band 12/13/17/71: 3W(34.77dBm) ERP

TEST PROCEDURE

1. According to the power tested in section 5.1, select the maximum power in each mode, and use the following formula to calculate the corresponding ERP/EIRP.
2. ERP = conducted power + Gain(dBd)
3. EIRP = conducted power + Gain(dBi)

   ERP = EIRP - 2.15

TEST RESULTS

☒ **Passed** ☐ **Not Applicable**

TEST DATA

Refer to the appendix report

5.9. Radiated Spurious Emission

LIMIT

LTE Band 2/4/5/12/13/17/25/26/66/71: -13dBm;

LTE Band 7/38/41: -25dBm

TEST CONFIGURATION

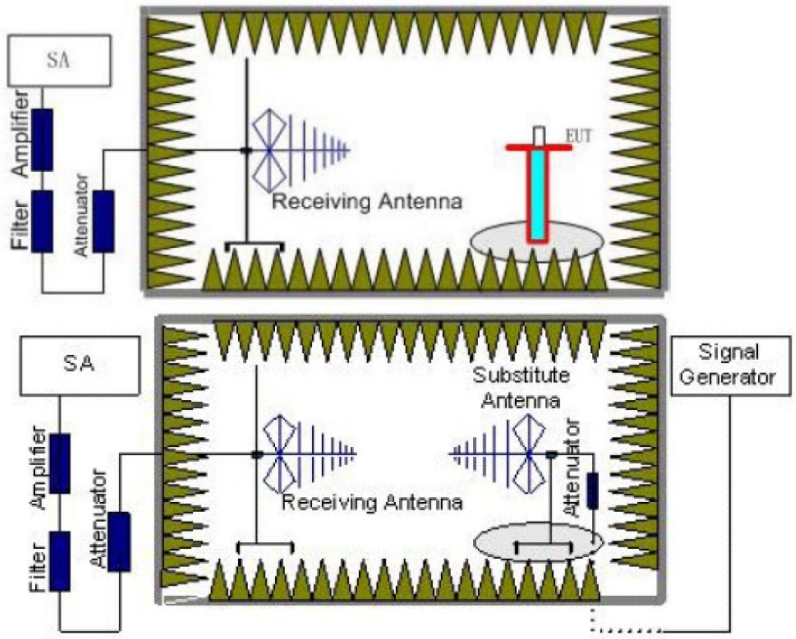

TEST PROCEDURE

1. Place the EUT in the center of the turntable.
   a) For radiated emissions measurements performed at frequencies less than or equal to 1 GHz, the EUT shall be placed on a RF-transparent table at a nominal height of 80 cm above the reference ground plane
   b) For radiated measurements performed at frequencies above 1 GHz, the EUT shall be placed on an RF transparent table at a nominal height of 1.5 m above the ground plane.
2. Unless the EUT uses an integral antenna, the EUT shall be terminated with a non-radiating transmitter load. In cases where the EUT uses an adjustable antenna, the antenna shall be adjusted through typical positions and lengths to maximize emissions levels.
3. The EUT shall be tested while operating on the frequency per manufacturer specification. Set the transmitter to operate in continuous transmit mode.
4. Receiver or Spectrum set as follow:

   Below 1GHz, RBW=100kHz, VBW=300kHz, Detector=Peak, Sweep time=Auto

   Above 1GHz, RBW=1MHz, VBW=3MHz, Detector=Peck, Sweep time=Auto
5. Each emission under consideration shall be evaluated:
   a) Raise and lower the measurement antenna from 1 m to 4 m, as necessary to enable detection of the maximum emission amplitude relative to measurement antenna height.
   b) Rotate the EUT through 360° to determine the maximum emission level relative to the axial position.
   c) Return the turntable to the azimuth where the highest emission amplitude level was observed.
   d) Vary the measurement antenna height again through 1 m to 4 m again to find the height associated with the maximum emission amplitude.
   e) Record the measured emission amplitude level and frequency
6. Repeat step 5 for each emission frequency with the measurement antenna oriented in both the horizontal and vertical polarizations to determine the orientation that gives the maximum emissions amplitude.

7. Set-up the substitution measurement with the reference point of the substitution antenna located as near as possible to where the center of the EUT radiating element was located during the initial EUT measurement.
8. Maintain the previous measurement instrument settings and test set-up, with the exception that the EUT is removed and replaced by the substitution antenna.
9. Connect a signal generator to the substitution antenna; locate the signal generator so as to minimize any potential influences on the measurement results. Set the signal generator to the frequency where emissions are detected, and set an output power level such that the radiated signal can be detected by the measurement instrument, with sufficient dynamic range relative to the noise floor.
10. For each emission that was detected and measured in the initial test
    a) Vary the measurement antenna height between 1 m to 4 m to maximize the received (measured) signal amplitude.
    b) Adjust the signal generator output power level until the amplitude detected by the measurement instrument equals the amplitude level of the emission previously measured directly in step 5 and step 6.
    c) Record the output power level of the signal generator when equivalence is achieved in step b).
11. Repeat step 8 through step 10 with the measurement antenna oriented in the opposite polarization.
12. Calculate the emission power in dBm referenced to a half-wave dipole using the following equation:

    Pe = Ps(dBm) − cable loss (dB) + antenna gain (dBd)

    where

    Pe = equivalent emission power in dBm

    Ps = source (signal generator) power in dBm

    NOTE—dBd refers to the measured antenna gain in decibels relative to a half-wave dipole.
13. Correct the antenna gain of the substitution antenna if necessary to reference the emission power to a half-wave dipole. When using measurement antennas with the gain specified in dBi, the equivalent dipole-referenced gain can be determined from:

    gain (dBd) = gain (dBi) − 2.15 dB.

    If necessary, the antenna gain can be calculated from calibrated antenna factor information
14. Provide the complete measurement results as a part of the test report.

TEST MODE

Please refer to the clause 4.2

TEST RESULTS

☒ **Passed** ☐ **Not Applicable**

Note: only show the worse case for QPSK modulation.

LTE Band 2

Test channel:	Low	Polarization:	Horizontal

Mark	Frequency MHz	Reading dBm	Antenna dB	Cable dB	Preamp dB	Level dBm	Limit dBm	Over limit	Remark
1	781.33	-69.17	29.79	5.71	29.54	-63.21	-13.00	-50.21	Peak
2	948.05	-62.25	29.40	6.35	29.27	-55.77	-13.00	-42.77	Peak
3	1807.88	-62.03	36.82	9.13	28.98	-45.06	-13.00	-32.06	Peak
4	2124.74	-66.65	40.29	10.03	29.00	-45.33	-13.00	-32.33	Peak
5	3747.66	-59.58	42.24	5.19	36.97	-49.12	-13.00	-36.12	Peak
6	5631.73	-57.87	43.77	6.61	35.26	-42.75	-13.00	-29.75	Peak

Test channel:	Low	Polarization:	Vertical

Mark	Frequency MHz	Reading dBm	Antenna dB	Cable dB	Preamp dB	Level dBm	Limit dBm	Over limit	Remark
1	360.46	-66.22	24.26	3.72	29.92	-68.16	-13.00	-55.16	Peak
2	948.05	-60.04	29.13	6.35	29.27	-53.83	-13.00	-40.83	Peak
3	1807.88	-58.20	36.55	9.13	28.98	-41.50	-13.00	-28.50	Peak
4	2440.18	-65.79	39.28	10.93	27.83	-43.41	-13.00	-30.41	Peak
5	3747.66	-57.89	42.17	5.19	36.97	-47.50	-13.00	-34.50	Peak
6	5631.73	-51.74	43.94	6.61	35.26	-36.45	-13.00	-23.45	Peak

Test channel:	Mid	Polarization:	Horizontal

Mark	Frequency MHz	Reading dBm	Antenna dB	Cable dB	Preamp dB	Level dBm	Limit dBm	Over limit	Remark
1	781.33	-65.45	29.79	5.71	29.54	-59.49	-13.00	-46.49	Peak
2	944.72	-63.96	29.33	6.34	29.26	-57.55	-13.00	-44.55	Peak
3	1807.88	-58.51	36.82	9.13	28.98	-41.54	-13.00	-28.54	Peak
4	2269.51	-71.60	40.56	10.48	28.63	-49.19	-13.00	-36.19	Peak
5	3700.26	-59.37	42.29	5.19	37.04	-48.93	-13.00	-35.93	Peak
6	5560.50	-56.03	43.79	6.50	35.23	-40.97	-13.00	-27.97	Peak

Test channel:	Mid	Polarization:	Vertical

Mark	Frequency MHz	Reading dBm	Antenna dB	Cable dB	Preamp dB	Level dBm	Limit dBm	Over limit	Remark
1	781.33	-66.12	29.30	5.71	29.54	-60.65	-13.00	-47.65	Peak
2	944.72	-64.77	29.05	6.34	29.26	-58.64	-13.00	-45.64	Peak
3	1807.88	-60.39	36.55	9.13	28.98	-43.69	-13.00	-30.69	Peak
4	2538.63	-71.49	39.20	11.21	26.85	-47.93	-13.00	-34.93	Peak
5	3700.26	-57.56	42.32	5.19	37.04	-47.09	-13.00	-34.09	Peak
6	5560.50	-54.24	43.94	6.50	35.23	-39.03	-13.00	-26.03	Peak

Test channel:	High	Polarization:	Horizontal

Mark	Frequency MHz	Reading dBm	Antenna dB	Cable dB	Preamp dB	Level dBm	Limit dBm	Over limit	Remark
1	784.08	-67.57	29.80	5.72	29.57	-61.62	-13.00	-48.62	Peak
2	948.05	-63.20	29.40	6.35	29.27	-56.72	-13.00	-43.72	Peak
3	1821.83	-60.60	36.99	9.17	29.11	-43.55	-13.00	-30.55	Peak
4	2287.03	-70.00	40.46	10.50	28.70	-47.74	-13.00	-34.74	Peak
5	3786.01	-59.47	42.20	5.20	37.10	-49.17	-13.00	-36.17	Peak
6	5674.90	-55.77	43.83	6.56	35.24	-40.62	-13.00	-27.62	Peak

Test channel:	High	Polarization:	Vertical

Mark	Frequency MHz	Reading dBm	Antenna dB	Cable dB	Preamp dB	Level dBm	Limit dBm	Over limit	Remark
1	784.08	-68.12	29.31	5.72	29.57	-62.66	-13.00	-49.66	Peak
2	948.05	-62.71	29.13	6.35	29.27	-56.50	-13.00	-43.50	Peak
3	1811.85	-60.01	36.58	9.15	29.05	-43.33	-13.00	-30.33	Peak
4	2124.74	-66.52	40.48	10.03	29.00	-45.01	-13.00	-32.01	Peak
5	3786.01	-58.29	42.06	5.20	37.10	-48.13	-13.00	-35.13	Peak
6	5674.90	-52.69	43.99	6.56	35.24	-37.38	-13.00	-24.38	Peak

LTE Band 4

Test channel:	Low	Polarization:	Horizontal

Mark	Frequency MHz	Reading dBm	Antenna dB	Cable dB	Preamp dB	Level dBm	Limit dBm	Over limit	Remark
1	762.33	-57.03	29.22	5.62	29.45	-51.64	-13.00	-38.64	Peak
2	948.05	-57.38	29.40	6.35	29.27	-50.90	-13.00	-37.90	Peak
3	1811.85	-61.45	36.87	9.15	29.05	-44.48	-13.00	-31.48	Peak
4	2117.75	-66.73	40.23	10.03	29.18	-45.65	-13.00	-32.65	Peak
5	3419.49	-53.80	39.86	5.02	37.62	-46.54	-13.00	-33.54	Peak
6	5138.58	-51.76	44.07	6.24	35.35	-36.80	-13.00	-23.80	Peak

Test channel:	Low	Polarization:	Vertical

Mark	Frequency MHz	Reading dBm	Antenna dB	Cable dB	Preamp dB	Level dBm	Limit dBm	Over limit	Remark
1	762.33	-57.86	29.08	5.62	29.45	-52.61	-13.00	-39.61	Peak
2	948.05	-57.81	29.13	6.35	29.27	-51.60	-13.00	-38.60	Peak
3	1819.83	-63.03	36.66	9.17	29.11	-46.31	-13.00	-33.31	Peak
4	2120.07	-66.96	40.40	10.03	29.12	-45.65	-13.00	-32.65	Peak
5	5138.58	-48.01	44.10	6.24	35.35	-33.02	-13.00	-20.02	Peak
6	6851.19	-59.36	47.39	7.29	34.05	-38.73	-13.00	-25.73	Peak

Test channel:	Mid	Polarization:	Horizontal

Mark	Frequency MHz	Reading dBm	Antenna dB	Cable dB	Preamp dB	Level dBm	Limit dBm	Over limit	Remark
1	762.33	-57.94	29.22	5.62	29.45	-52.55	-13.00	-39.55	Peak
2	948.05	-59.31	29.40	6.35	29.27	-52.83	-13.00	-39.83	Peak
3	1811.85	-56.19	36.87	9.15	29.05	-39.22	-13.00	-26.22	Peak
4	2437.50	-66.39	39.61	10.92	27.83	-43.69	-13.00	-30.69	Peak
5	5177.97	-52.98	43.99	6.32	35.37	-38.04	-13.00	-25.04	Peak
6	6903.71	-62.06	47.22	7.39	34.39	-41.84	-13.00	-28.84	Peak

Test channel:	Mid	Polarization:	Vertical

Mark	Frequency MHz	Reading dBm	Antenna dB	Cable dB	Preamp dB	Level dBm	Limit dBm	Over limit	Remark
1	762.33	-57.20	29.08	5.62	29.45	-51.95	-13.00	-38.95	Peak
2	948.05	-59.62	29.13	6.35	29.27	-53.41	-13.00	-40.41	Peak
3	1811.85	-59.78	36.58	9.15	29.05	-43.10	-13.00	-30.10	Peak
4	2120.07	-68.02	40.40	10.03	29.12	-46.71	-13.00	-33.71	Peak
5	5177.97	-47.98	43.98	6.32	35.37	-33.05	-13.00	-20.05	Peak
6	6903.71	-57.63	47.38	7.39	34.39	-37.25	-13.00	-24.25	Peak

Test channel:	High	Polarization:	Horizontal

Mark	Frequency MHz	Reading dBm	Antenna dB	Cable dB	Preamp dB	Level dBm	Limit dBm	Over limit	Remark
1	762.33	-57.36	29.22	5.62	29.45	-51.97	-13.00	-38.97	Peak
2	948.05	-60.35	29.40	6.35	29.27	-53.87	-13.00	-40.87	Peak
3	1819.83	-59.89	36.97	9.17	29.11	-42.86	-13.00	-29.86	Peak
4	2440.18	-68.04	39.60	10.93	27.83	-45.34	-13.00	-32.34	Peak
5	5204.40	-54.15	43.95	6.31	35.50	-39.39	-13.00	-26.39	Peak
6	9759.59	-70.54	50.44	9.46	33.66	-44.30	-13.00	-31.30	Peak

Test channel:	High	Polarization:	Vertical

Mark	Frequency MHz	Reading dBm	Antenna dB	Cable dB	Preamp dB	Level dBm	Limit dBm	Over limit	Remark
1	762.33	-56.02	29.08	5.62	29.45	-50.77	-13.00	-37.77	Peak
2	948.05	-61.64	29.13	6.35	29.27	-55.43	-13.00	-42.43	Peak
3	1813.84	-59.93	36.60	9.16	29.09	-43.26	-13.00	-30.26	Peak
4	2440.18	-64.67	39.28	10.93	27.83	-42.29	-13.00	-29.29	Peak
5	3472.12	-49.72	40.69	4.98	37.50	-41.55	-13.00	-28.55	Peak
6	5204.40	-54.07	43.92	6.31	35.50	-39.34	-13.00	-26.34	Peak

LTE Band 12

Test channel:	Low	Polarization:	Horizontal

Mark	Frequency MHz	Reading dBm	Antenna dB	Cable dB	Preamp dB	Level dBm	Limit dBm	Over limit	Remark
1	56.50	-96.27	24.19	1.38	0.00	-70.70	-13.00	-57.70	Peak
2	426.73	-94.38	26.00	4.07	0.00	-64.31	-13.00	-51.31	Peak
3	1399.35	-42.03	37.16	3.08	37.33	-39.12	-13.00	-26.12	Peak
4	2500.25	-60.22	39.27	4.19	37.67	-54.43	-13.00	-41.43	Peak
5	5138.58	-68.25	44.07	6.24	35.35	-53.29	-13.00	-40.29	Peak
6	9834.41	-69.41	50.57	9.50	34.13	-43.47	-13.00	-30.47	Peak

Test channel:	Low	Polarization:	Vertical

Mark	Frequency MHz	Reading dBm	Antenna dB	Cable dB	Preamp dB	Level dBm	Limit dBm	Over limit	Remark
1	102.36	-93.82	25.43	1.89	0.00	-66.50	-13.00	-53.50	Peak
2	486.03	-93.34	25.90	4.37	0.00	-63.07	-13.00	-50.07	Peak
3	1399.35	-30.02	37.76	3.08	37.33	-26.51	-13.00	-13.51	Peak
4	3049.39	-66.02	41.14	4.65	37.33	-57.56	-13.00	-44.56	Peak
5	6938.94	-70.87	47.37	7.37	34.30	-50.43	-13.00	-37.43	Peak
6	10833.22	-71.16	52.64	9.92	35.95	-44.55	-13.00	-31.55	Peak

Test channel:	Mid	Polarization:	Horizontal

Mark	Frequency MHz	Reading dBm	Antenna dB	Cable dB	Preamp dB	Level dBm	Limit dBm	Over limit	Remark
1	37.84	-93.98	27.46	1.12	0.00	-65.40	-13.00	-52.40	Peak
2	428.24	-93.01	26.01	4.08	0.00	-62.92	-13.00	-49.92	Peak
3	1406.50	-43.04	37.12	3.09	37.34	-40.17	-13.00	-27.17	Peak
4	2500.25	-60.22	39.27	4.19	37.67	-54.43	-13.00	-41.43	Peak
5	6109.67	-69.21	44.99	6.98	34.70	-51.94	-13.00	-38.94	Peak
6	9834.41	-69.41	50.57	9.50	34.13	-43.47	-13.00	-30.47	Peak

Test channel:	Mid	Polarization:	Vertical

Mark	Frequency MHz	Reading dBm	Antenna dB	Cable dB	Preamp dB	Level dBm	Limit dBm	Over limit	Remark
1	140.96	-87.60	21.78	2.24	0.00	-63.58	-13.00	-50.58	Peak
2	470.89	-92.95	25.38	4.30	0.00	-63.27	-13.00	-50.27	Peak
3	1406.50	-32.95	37.76	3.09	37.34	-29.44	-13.00	-16.44	Peak
4	2500.25	-58.92	39.23	4.19	37.67	-53.17	-13.00	-40.17	Peak
5	4772.91	-67.37	43.61	5.95	35.94	-53.75	-13.00	-40.75	Peak
6	10860.83	-69.05	52.66	9.93	35.94	-42.40	-13.00	-29.40	Peak

Test channel:	High	Polarization:	Horizontal

Mark	Frequency MHz	Reading dBm	Antenna dB	Cable dB	Preamp dB	Level dBm	Limit dBm	Over limit	Remark
1	40.74	-96.44	27.43	1.16	0.00	-67.85	-13.00	-54.85	Peak
2	420.77	-95.71	25.98	4.04	0.00	-65.69	-13.00	-52.69	Peak
3	1413.67	-40.16	37.07	3.09	37.35	-37.35	-13.00	-24.35	Peak
4	2223.98	-66.73	40.83	4.02	37.68	-59.56	-13.00	-46.56	Peak
5	3709.69	-67.23	42.28	5.19	37.01	-56.77	-13.00	-43.77	Peak
6	9784.47	-71.78	50.54	9.48	33.44	-45.20	-13.00	-32.20	Peak

Test channel:	High	Polarization:	Vertical

Mark	Frequency MHz	Reading dBm	Antenna dB	Cable dB	Preamp dB	Level dBm	Limit dBm	Over limit	Remark
1	92.76	-95.19	25.85	1.80	0.00	-67.54	-13.00	-54.54	Peak
2	470.89	-94.59	25.38	4.30	0.00	-64.91	-13.00	-51.91	Peak
3	1413.67	-33.19	37.76	3.09	37.35	-29.69	-13.00	-16.69	Peak
4	3003.17	-64.07	41.03	4.72	37.37	-55.69	-13.00	-42.69	Peak
5	6331.33	-67.88	46.31	7.05	34.50	-49.02	-13.00	-36.02	Peak
6	10888.51	-68.03	52.69	9.95	35.93	-41.32	-13.00	-28.32	Peak

LTE Band 13

Test channel:	Low	Polarization:	Horizontal

Mark	Frequency MHz	Reading dBm	Antenna dB	Cable dB	Preamp dB	Level dBm	Limit dBm	Over limit	Remark
1	37.84	-94.10	27.46	1.12	0.00	-65.52	-13.00	-52.52	Peak
2	423.74	-93.15	25.99	4.06	0.00	-63.10	-13.00	-50.10	Peak
3	1553.29	-45.60	36.23	3.19	37.43	-43.61	-13.00	-30.61	Peak
4	2328.25	-60.37	40.22	4.05	37.59	-53.69	-13.00	-40.69	Peak
5	3883.62	-59.53	41.78	5.30	37.13	-49.58	-13.00	-36.58	Peak
6	10916.26	-69.07	52.71	9.96	35.92	-42.32	-13.00	-29.32	Peak

Test channel:	Low	Polarization:	Vertical

Mark	Frequency MHz	Reading dBm	Antenna dB	Cable dB	Preamp dB	Level dBm	Limit dBm	Over limit	Remark
1	94.74	-94.05	25.82	1.82	0.00	-66.41	-13.00	-53.41	Peak
2	410.54	-92.78	25.31	3.99	0.00	-63.48	-13.00	-50.48	Peak
3	1553.29	-39.77	37.76	3.19	37.43	-36.25	-13.00	-23.25	Peak
4	2500.25	-58.50	39.23	4.19	37.67	-52.75	-13.00	-39.75	Peak
5	3883.62	-58.21	41.81	5.30	37.13	-48.23	-13.00	-35.23	Peak
6	10860.83	-69.21	52.66	9.93	35.94	-42.56	-13.00	-29.56	Peak

Test channel:	Mid	Polarization:	Horizontal

Mark	Frequency MHz	Reading dBm	Antenna dB	Cable dB	Preamp dB	Level dBm	Limit dBm	Over limit	Remark
1	38.78	-93.70	27.60	1.13	0.00	-64.97	-13.00	-51.97	Peak
2	449.85	-94.09	25.95	4.19	0.00	-63.95	-13.00	-50.95	Peak
3	1557.25	-45.95	36.20	3.19	37.41	-43.97	-13.00	-30.97	Peak
4	2500.25	-61.03	39.27	4.19	37.67	-55.24	-13.00	-42.24	Peak
5	4676.70	-66.27	43.53	5.88	36.11	-52.97	-13.00	-39.97	Peak
6	10888.51	-68.66	52.64	9.95	35.93	-42.00	-13.00	-29.00	Peak

Test channel:	Mid	Polarization:	Vertical

Mark	Frequency MHz	Reading dBm	Antenna dB	Cable dB	Preamp dB	Level dBm	Limit dBm	Over limit	Remark
1	100.57	-94.01	25.67	1.88	0.00	-66.46	-13.00	-53.46	Peak
2	501.66	-93.79	26.22	4.45	0.00	-63.12	-13.00	-50.12	Peak
3	1557.25	-38.98	37.76	3.19	37.41	-35.44	-13.00	-22.44	Peak
4	3903.44	-62.30	41.76	5.31	37.01	-52.24	-13.00	-39.24	Peak
5	7357.33	-69.38	48.60	7.72	34.69	-47.75	-13.00	-34.75	Peak
6	10833.22	-68.93	52.64	9.92	35.95	-42.32	-13.00	-29.32	Peak

Test channel:	High	Polarization:	Horizontal

Mark	Frequency MHz	Reading dBm	Antenna dB	Cable dB	Preamp dB	Level dBm	Limit dBm	Over limit	Remark
1	40.45	-94.59	27.57	1.16	0.00	-65.86	-13.00	-52.86	Peak
2	434.30	-93.38	26.02	4.11	0.00	-63.25	-13.00	-50.25	Peak
3	1561.22	-44.34	36.18	3.19	37.40	-42.37	-13.00	-29.37	Peak
4	3883.62	-58.00	41.78	5.30	37.13	-48.05	-13.00	-35.05	Peak
5	7117.84	-70.20	47.77	7.53	34.31	-49.21	-13.00	-36.21	Peak
6	10860.83	-68.65	52.57	9.93	35.94	-42.09	-13.00	-29.09	Peak

Test channel:	High	Polarization:	Vertical

Mark	Frequency MHz	Reading dBm	Antenna dB	Cable dB	Preamp dB	Level dBm	Limit dBm	Over limit	Remark
1	97.78	-94.58	25.78	1.85	0.00	-66.95	-13.00	-53.95	Peak
2	440.46	-93.20	25.59	4.14	0.00	-63.47	-13.00	-50.47	Peak
3	1561.22	-36.36	37.76	3.19	37.40	-32.81	-13.00	-19.81	Peak
4	3883.62	-58.07	41.81	5.30	37.13	-48.09	-13.00	-35.09	Peak
5	7489.60	-69.82	48.44	7.63	34.33	-48.08	-13.00	-35.08	Peak
6	10860.83	-68.13	52.66	9.93	35.94	-41.48	-13.00	-28.48	Peak

6. TEST SETUP PHOTOS OF THE EUT

7. EXTERNAL AND INTERNAL PHOTOS OF THE EUT

7.1. External Photos

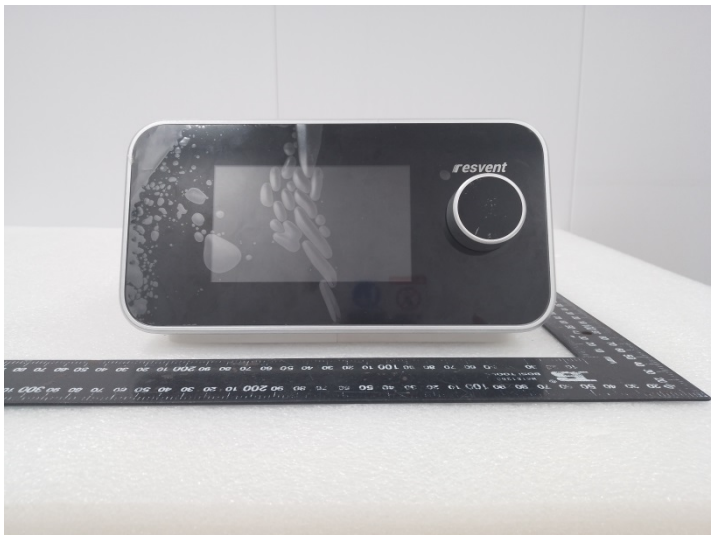

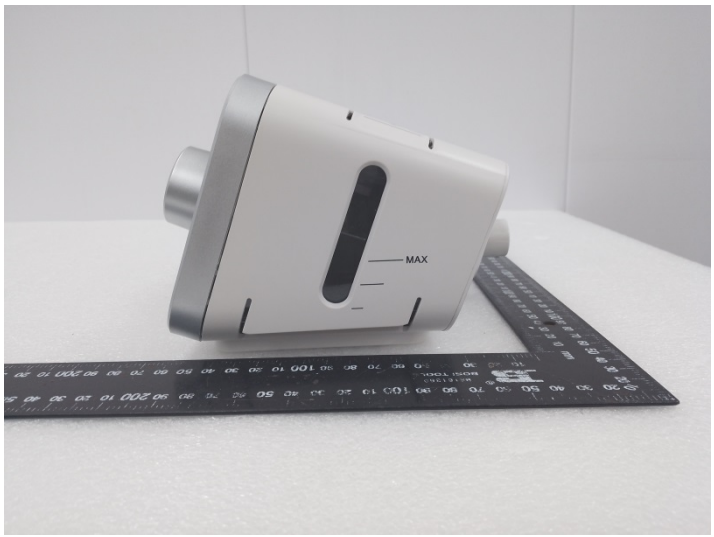

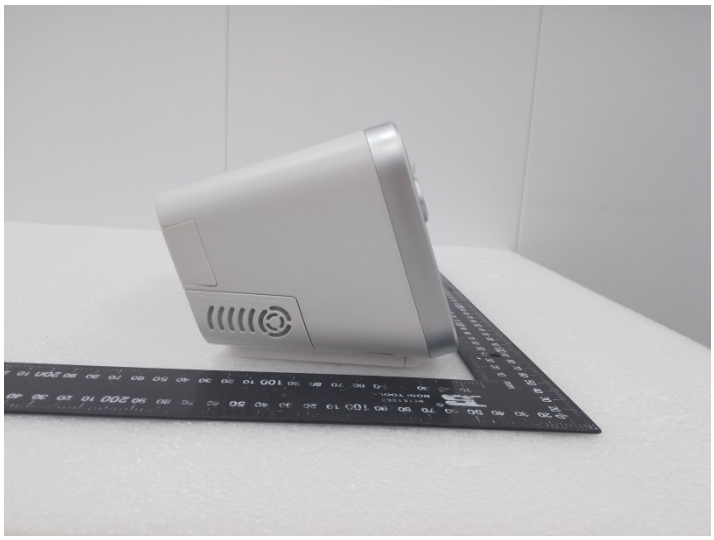

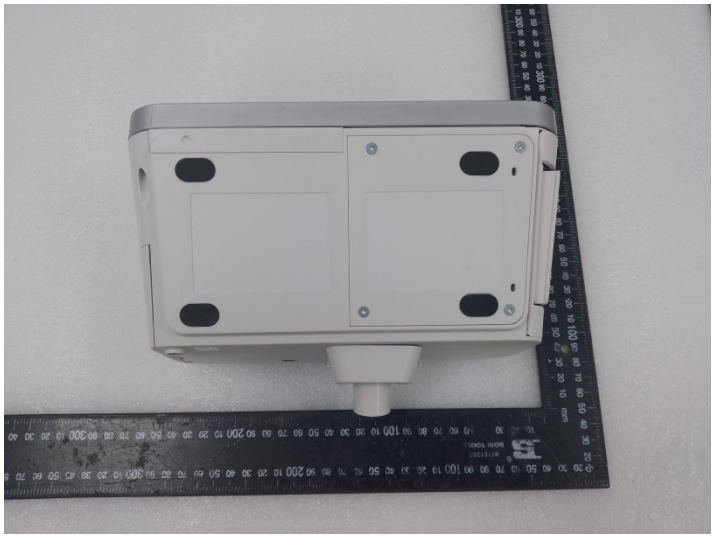

Medical Switching Power Supply

Medical Switching Power Supply
MODEL/型号/型番/모델명:LXCP61(II)-024300
INPUT/输入/入力/입력:100-240V~ 50/60Hz 1.5A Max.
OUTPUT/输出/出力/출력:24.0V⎓3.0A
制造商:深圳市龙星辰电源有限公司
製造元:中國廣東省深圳市龍星辰電源有限會社
Manufacturers: Shenzhen Longxc Power Supply Co.,LTD
제조원:중국광둥성선전시룽싱천전원유한회사
SN:00861112231000017

7.2. Internal Photos

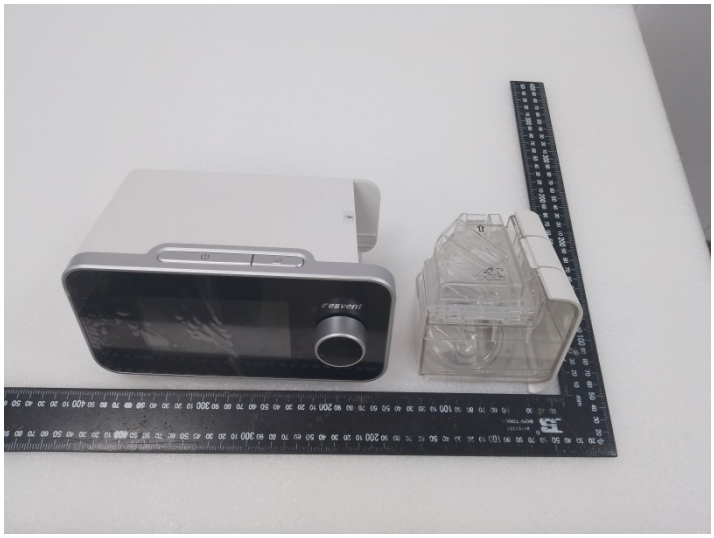

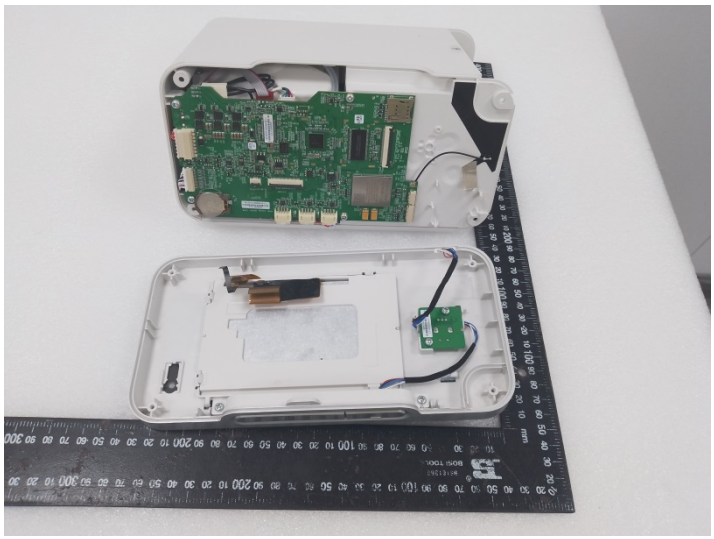

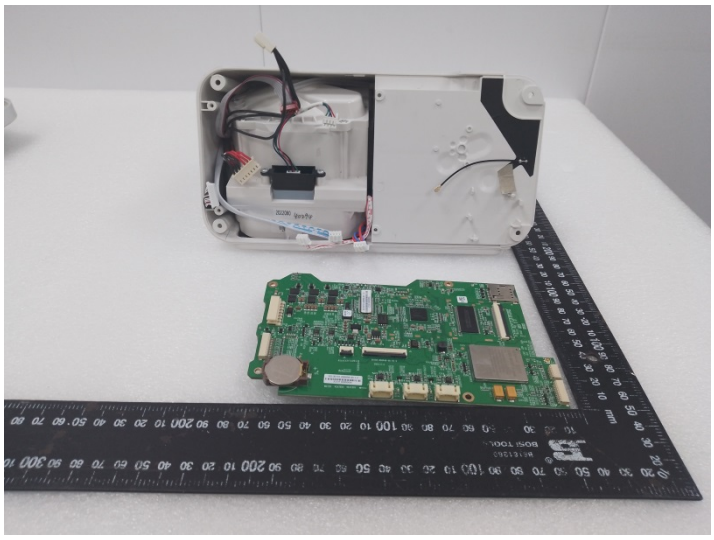

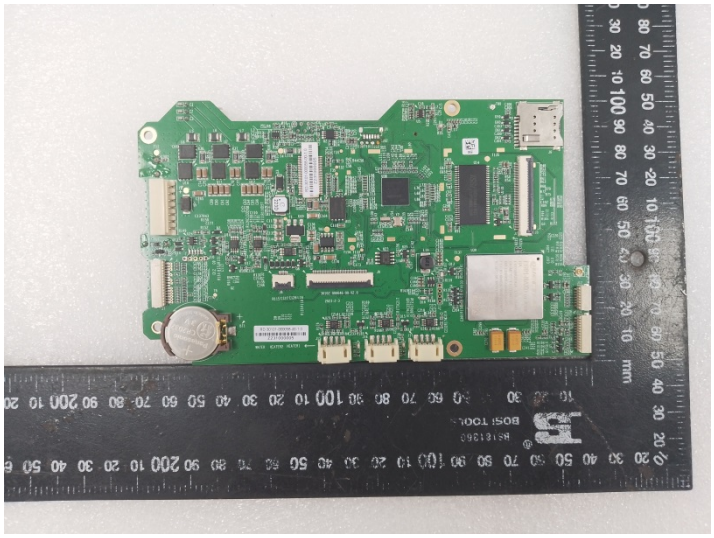

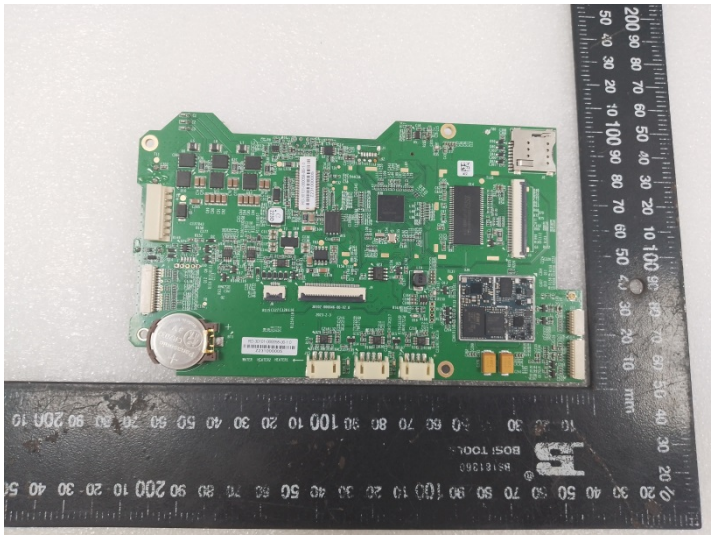

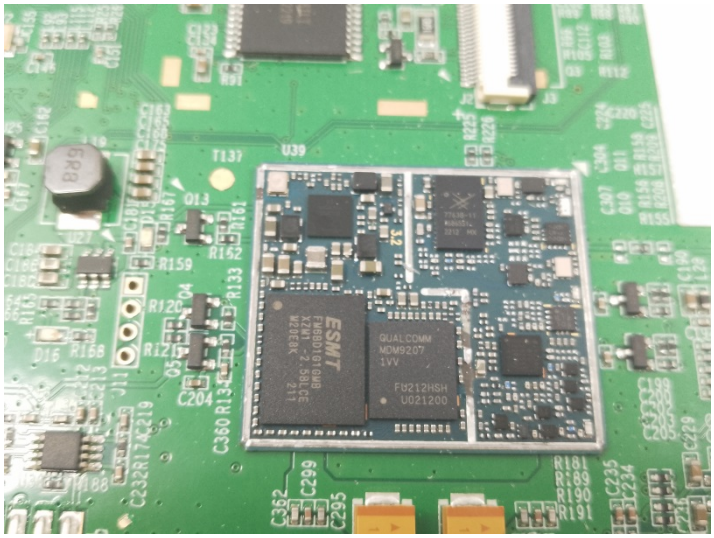
ESMT
QUALCOMM
MDM9207
1VV
FB212HSH
U021200
U39
T137
Q13
R159
R162
R133
C204
C299
C295
C362
C360
R181
R189
R190
R191

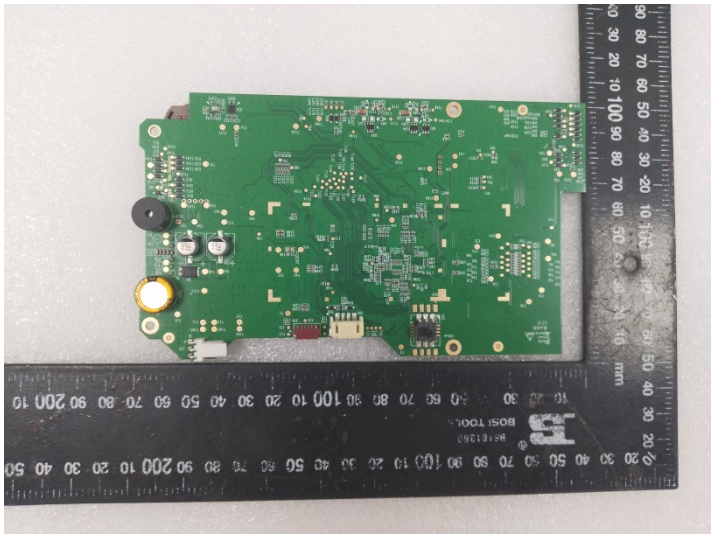

8. APPENDIX REPORT