v.1b

FUSE VERT VINYL PLAYER WITH USB, BLUETOOTH, FM RADIO

MODEL: RAD-VERT

Instructions Manual

WWW.FUSEAUDIO.NET

CAUTION:

TO PREVENT FIRE OR SHOCK HAZARD, DO NOT USE THIS PLUG WITH AN EXTENSION CORD, RECEPTACLE OR OTHER OUTLET UNLESS THE BLADES CAN BE FULLY INSERTED TO PREVENT BLADE EXPOSURE. TO PREVENT FIRE OR SHOCK HAZARD, DO NOT EXPOSE THIS APPLIANCE TORAIN OR MOISTURE.

The lightning flash with arrow-head symbol, within an equi-lateral triangle is intended to alert the user to the presence of uninsulated'dangerous voltage' within the product's enclosure that may be of sufficient magnitude to constitute a risk of electric shock to persons.	CAUTION RISK OF ELECTRIC SHOCK DO NOT OPEN WARNING:TOREDUCETHE RISK OF ELECTRIC SHOCK DO NOT REMOVE COVER (OR BACK), NO USER SERVICEABLE PARTS INSIDE REFER SERVICING TO QUALIFIED SERVICE PERSONNEL.	The exclamation point within an equilateral triangle is in-tended to alert the user to the presence of important operating and maintenance (servicing) instructions in the literature accompany-ing the appliance.

IMPORTANT SAFETY INSTRUCTIONS

1) Please read these instructions and keep them for future reference.
2) Pay attention to all warnings.
3) Follow all instructions.
4) Do not use this apparatus near water.
5) Clean only with a dry cloth.
6) Do not block any ventilation openings.
7) Install in accordance with the manufacturer's instructions. Do not install near any heat sources such as radiators, heaters, stoves, or other apparatus (including amplifiers) that produce heat.
8) Protect the power cord from being walked on or kinked, in particular where the plug is fitted and at the point where it exits from the apparatus.
9) Only use attachments / accessories specified by the manufacturer.
10) Unplug this apparatus during lightning storms or when unused for long periods of time.
11) Refer all servicing to qualified service personnel. Servicing is required when the apparatus has been damaged in any way, such as power-supply cord or plug is damaged, liquid has been spilled or objects have fallen into the apparatus, the apparatus has been exposed to rain or moisture, does not operate normally, or has been dropped.
12) This appliance should not be exposed to dripping or splashing water and no object filled with liquids, such as vases, should be placed on the apparatus.
13) Do not overload the wall power outlet. Use only power source as indicated - i.e.120V AC mains.

PREPARATION FOR USE

UNPACKING AND SET UP

- Carefully remove the unit from the display carton and remove all packing materials from the unit.
- Unwind the AC power cord and extend it to its full length.
- Place the unit on a flat and level surface. The selected location should be stable and free from vibration and convenient to an AC outlet, out of a strong magnetic field.
- Connect the plug to your AC outlet.
- Remove the stylus protector from the stylus assembly.
- During this operation pay attention to the stylus, because the stylus damage is not covered by guarantee.

This product is designed to operate by 12V 1A AC-DC adapter. Attempting to operate this system on any other power source may cause damage to the system, and such damage is not covered under warranty.

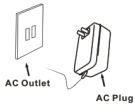

NOTE: This system is equipped with a domestic standard AC power plug. If this plug does not fit into your existing AC outlet, do not try to defeat this safety feature by filing the wide blade to make it fit into your outlet. If this plug will not fit into your outlet, you probably have an outdated non-polarized AC outlet. You should have your outlet changed by a qualified licensed electrician.

PROTECT YOUR FURNITURE

This model is equipped with non-skid rubber 'feet' to prevent the product from moving when you operate the controls. These 'feet' are made from non-migrating rubber material specially formulated to avoid leaving any marks or stains on your furniture. However certain types of oil-based furniture polishes, wood preservatives, or cleaning sprays may cause the rubber 'feet' to soften and leave marks or a rubber residue on the furniture. To prevent any damage to your furniture we strongly recommend that you purchase small self-adhesive felt pads, available at hardware stores and home improvement centers everywhere, and apply these pads to the bottom of the rubber 'feet' before you place the product on fine wooden furniture.

CARE OF THE CABINET: You should care for the Vert wood cabinet as you would care for any piece of the furniture. When the cabinet becomes dusty wipe it with a soft, non-abrasive dust cloth. If the cabinet becomes smudged with fingerprints you may use any good quality commercial dusting and polishing spray cleaner, however avoid spraying the plastic or metal parts of this system. We recommend that you spray the cleaner on your dust cloth. Not directly on the cabinet. to avoid getting any of the spray on the plastic or metal parts.

LOCATION OF CONTROLS AND INDICATORS

FRONT PANEL

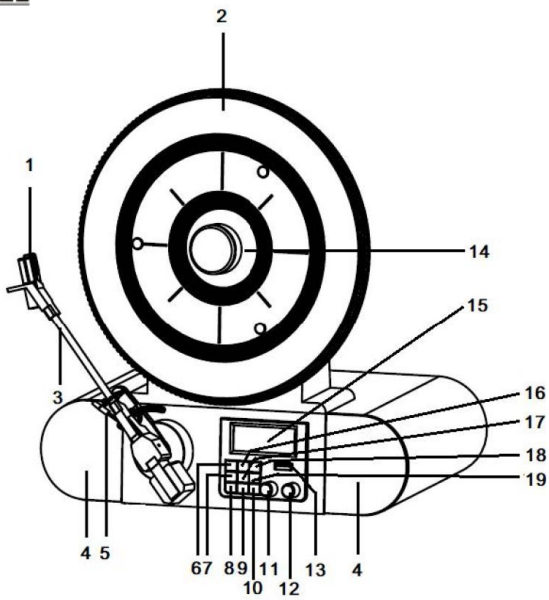

1) Cartridge & Stylus	11) TUNE Knob
2) Turntable	12) VOLUME Knob
3) Tone Arm	13) USB Jack
4) Speakers	14) Magnetic Adapter
5) Cue Lever	15) LCD Screen
6) PLAY/PAUSE Button	16) PRESET+ Button
7) TIME/SCAN Button	17) REP/MEM/SNOOZE Button
8) ALARM Button	18) PRESET- Button
9) SLEEP Button	19) MODE Button
10) POWER Button	

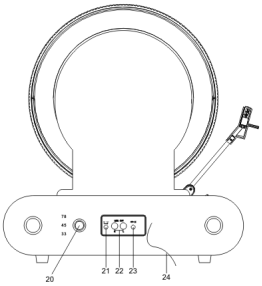

20) Speed Control Knob
21) Power Port
22) LINE OUT Jack
23) AUX IN Jack
24) FM Antenna

OPERATING INSTRUCTIONS

TIME SETTING

1. Connect AC-DC adapter to the power jack, “ 0:00 ” will be shown on the screen.

2. Long press the TIME/SCAN button until the first “ 0 ” is flashing, rotate the TUNE knob to set the correct hour, press the TIME/SCAN button again to set the minute, press the TIME/SCAN button again to confirm.

ALARM SETTING

Long press the ALARM button to enter the alarm detail menu, rotate the TUNE knob for below details, and press the ALARM button to set the Alarm detail:

1. Set alarm time: long press the ALARM button, “0:00” (hour: minute) will be shown on the screen. Rotate the TUNE knob and press the ALARM button to set and confirm the time.

2. Rotate the TUNE knob to select Buzz/FM/USB/AUX/VINYL mode, press ALARM button to confirm.

Note: FM/USB/AUX/VINYL function will be activated when the time on the clock is the same as the alarm time that has been set if FM/USB/AUX/VINYL mode was selected.

3. Once the alarm has been set and selected Buzz mode, the unit will be ringed when the time on the clock is the same as the alarm time that has been set.

4. When the alarm clock is ringing, press the SNOOZE button, the alarm clock will ring again after 9 minutes.

5. Cancel the alarm clock, press the ALARM button.

Note:

1. It is very important to set the alarm to be ON position, and alarm symbol will be shown on display.

2. When you turn off the unit, the time and alarm function will be cut off. You need to reset the time and alarm clock when you turn on the unit again.

SLEEP SETTING

Long press the SLEEP button, it will show “90” on the screen, then after 90 minutes the unit will be off. press the SLEEP button again by again to select the sleep time 90, 80, 70, 60, 50, 40, 30, 20, 10 minutes, and the time symbol will display on the screen.
To cancel the SLEEP function, press SLEEP button until the “OFF” show on the screen.

VINYL PLAYER OPERATION

1. Press the POWER button to turn on the unit.
2. Press the MODE button to select the VNYL mode. “VNYL” will be shown on the screen.
3. Rotate the SPEED CONTROL KNOB (on the back of the unit) to the correct speed (33 1/3, 45 or 78rpm) for the select record.
4. Take out the MAGNETIC ADAPTER, carefully put a record on the TURNTABLE, then put the MAGNETIC ADAPTER back to hold the record.
5. Remove the stylus protector from stylus assembly.
6. Release the tonearm lock. Use the Cue Lever to lift the tonearm.
7. Move the tone arm over the record where you want the record to start. Use the Cue Lever back to the down position. The tonearm will descend slowly onto the record and begin to play.
8. Rotate the volume control knob to get desired sound level.
9. The tone arm will stop automatically at the end of the record.

Note: Do not turn or stop the turntable manually. Moving or jarring the turntable without securing the tone arm clamp could result in damage to the tonearm.

RADIO OPERATION

1. Press the POWER button to turn on the unit.
2. Press the MODE button to select the FM mode. “FM” will be shown on the screen.
3. Long Press the TIME/SCAN to start auto-search the FM stations. Or rotate the TUNE knob to select the desired FM stations.

MEMORY FUCTION IN FM MODE

1. In FM playing mode, rotate the TUNE knob to choose the desired radio station that you would like to store.
2. Long press the REP/MEM/SNOOZE button, “MEM1“ will be shown on the screen.
3. Press the REP/MEM/SNOOZE button again to confirm and store it as preset station.
4. Repeat steps 1-3 for additional radio station you like to store. A maximum of 30 stations can be stored in FM mode.
5. Press the PRESET+ or PRESET- button to select preset stations.

Note: In FM playing mode, long press TIME/SCAN button, the unit can automatically search and store the FM stations.

BLUETOOTH OPERATION

1. Press the POWER button to turn on the unit.
2. Press the MODE button to select the BT mode. “BT” will be flashing on the screen.
3. Turn on your Bluetooth device and search for “Fuse Vert” and pair.
4. Once your Bluetooth device is successfully paired with the unit, you will hear a short confirmation sound from the unit.
5. Select and play the audio files though your Bluetooth device.
6. To skip to the next or previous track, rotate the TUNE knob of the unit or select from your Bluetooth device.
7. To stop this function, switch to other mode or shut down your Bluetooth of your Bluetooth device.

USB OPERATION

1. Press the POWER button to turn on the unit.
2. Press the MODE button to select the USB mode. “USB --:--” will be shown on the screen.
3. Insert a USB disk into the USB socket, playback will start automatically.
4. During the playback, press the PLAY/PAUSE button to pause, press it again to resume playback.
5. To skip to the next or previous track by rotating the TUNE knob.
6. When you finish the music, press the POWER Button to turn off the unit.

Note: During USB playback, press the REP/MEM/SNOZE button once to repeat one song, “ONE” will be shown on the screen. Press the REP/MEM/SNOOZE button again to repeat all songs, “ALL” will be shown on the screen. To stop the repeat function, switch to other mode or turn off the power.

AUX IN OPERATION:

1. Turn on the unit.
2. Connect the 3.5 mm audio cable between your external device and the AUX jack of the back of the unit.
3. Press the MODE button to select the AUX mode. “AUX” will be shown on the screen.
4. Play the music from your external device from the unit.

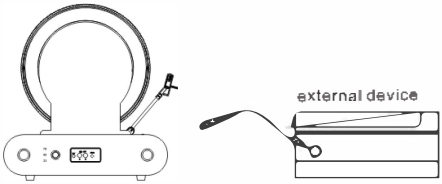

TECHNICAL SPECIFICATIONS

1) FM radio: 88-108MHz
2) Turntable speed: 33/45/78 RPM
   Playable disc size: 17.5/25/30cm
3) USB port plays MP3 format
4) Max consumption power: 12W
5) power consumption: 1W x 2

FCC Statement

Changes or modifications not expressly approved by the party responsible for compliance could void the user's authority to operate the equipment.

This equipment has been tested and found to comply with the limits for a Class B digital device, pursuant to Part 15 of the FCC Rules. These limits are designed to provide reasonable protection against harmful interference in a residential installation. This equipment generates uses and can radiate radio frequency energy and, if not installed and used in accordance with the instructions, may cause harmful interference to radio communications. However, there is no guarantee that interference will not occur in a particular installation. If this equipment does cause harmful interference to radio or television reception, which can be determined by turning the equipment off and on, the user is encouraged to try to correct the interference by one or more of the following measures:

-- Reorient or relocate the receiving antenna.

-- Increase the separation between the equipment and receiver.

-- Connect the equipment into an outlet on a circuit different from that to which the receiver is connected.

-- Consult the dealer or an experienced radio/TV technician for help

This device complies with part 15 of the FCC rules. Operation is subject to the following two conditions (1)this device may not cause harmful interference, and (2) this device must accept any interference received, including interference that may cause undesired operation.

:

FCC WARNING

This device complies with part 15 of the FCC Rules. Operation is subject to the following two conditions: (1) this device may not cause harmful interference, and (2) this device must accept any interference received, including interference that may cause undesired operation.

Any changes or modifications not expressly approved by the party responsible for compliance could void the user's authority to operate the equipment.

NOTE: This equipment has been tested and found to comply with the limits for a Class B digital device, pursuant to Part 15 of the FCC Rules. These limits are designed to provide reasonable protection against harmful interference in a residential installation. This equipment generates, uses and can radiate radio frequency energy and, if not installed and used in accordance with the instructions, may cause harmful interference to radio communications. However, there is no guarantee that interference will not occur in a particular installation.

If this equipment does cause harmful interference to radio or television reception,
which can be determined by turning the equipment off and on, the user is encouraged to try to correct the interference by one or more of the following measures:

-- Reorient or relocate the receiving antenna.

-- Increase the separation between the equipment and receiver.

-- Connect the equipment into an outlet on a circuit different
from that to which the receiver is connected.

-- Consult the dealer or an experienced radio/TV technician for help.

To maintain compliance with FCC’s RF Exposure guidelines, This equipment should be installed and operated with minimum 20cm distance between the radiator and your body: Use only the supplied antenna.