FCC Test Report

FCC ID	:	**2A6PM-UA2-TMM-V2**
Equipment	:	**TrioMobil UA Module**
Brand Name	:	**TRIO MOBIL**
Model Name	:	**UA2-TMM-V2**
Applicant	:	**TRIO MOBIL INC 1401 PENNSYLVANIA AVE STE 105 WILMINGTON DELAWARE United States 19806**
Manufacturer	:	**TRIO MOBIL INC 1401 PENNSYLVANIA AVE STE 105 WILMINGTON DELAWARE United States 19806**
Standard	:	**47 CFR FCC Part 15.519**

The product was received on Aug. 05, 2022, and testing was started from Aug. 19, 2022 and completed on Aug. 20, 2022. We, SPORTON INTERNATIONAL INC. Hsinhua Laboratory, would like to declare that the tested sample has been evaluated in accordance with the procedures given in ANSI C63.10-2013 and shown compliance with the applicable technical standards.

The test results in this variant report apply exclusively to the tested model / sample. Without written approval of SPORTON INTERNATIONAL INC. Hsinhua Laboratory, the test report shall not be reproduced except in full.

Approved by: Jackson Tsai

SPORTON INTERNATIONAL INC. Hsinhua Laboratory

No.52, Huaya 1st Rd., Guishan Dist., Taoyuan City 333411, Taiwan (R.O.C.)

Table of Contents

HISTORY OF THIS TEST REPORT 3

1 GENERAL DESCRIPTION 5

1.1 Information 5
1.2 Testing Applied Standards 6
1.3 Testing Location Information 6
1.4 Measurement Uncertainty 6

2 TEST CONFIGURATION OF EUT 7

2.1 Test Condition 7
2.2 The Worst Case Configuration 7
2.3 The Worst Case Measurement Configuration 7
2.4 Support Equipment 8
2.5 Test Setup Diagram 8

3 TRANSMITTER TEST RESULT 10

3.1 AC Power-line Conducted Emissions 10
3.2 Radiated Emissions 12

4 TEST EQUIPMENT AND CALIBRATION DATA 15

APPENDIX A. TEST RESULT OF AC POWER-LINE CONDUCTED EMISSIONS

APPENDIX B. TEST RESULT OF RADIATED EMISSIONS

APPENDIX C. TEST PHOTOS

PHOTOGRAPHS OF EUT V01

History of this test report

Report No.	Version	Description	Issued Date
FR212662-01	01	Initial issue of report	Aug. 26, 2022

Summary of Test Result

Report Clause	Ref. Std. Clause	Test Items	Result (PASS/FAIL)	Remark
1.1.2	15.203	Antenna Requirement	PASS	-
3.1	15.207	AC Power-line Conducted Emissions	PASS	-
-	15.519(b)	UWB Bandwidth	Not Required	Refer as 1.1.5
-	15.203	Cessation Time	Not Required	Refer as 1.1.5
-	15.519(e)	Peak Emissions within a 50 MHz Bandwidth	Not Required	Refer as 1.1.5
3.2	15.519(c) /15.519(d)	Radiated Emissions	PASS	-

Declaration of Conformity:
The test results with all measurement uncertainty excluded are presented in accordance with the regulation limits or requirements declared by manufacturers.
Comments and explanations:
None

Reviewed by: Sam Tsai

Report Producer: Jenny Yang

1 General Description

1.1 Information

1.1.1 RF General Information

RF General Information				
Frequency Range (GHz)	Mode	Ch. Freq. (MHz)	Channel Number	Transmit Chains (N_{TX})
3.1-10.6	UWB	3494.4	1[1]	1
	UWB	3993.6	2[1]	1
Note 1: UWB uses BPSK modulation.				

1.1.2 Antenna Information

Ant.	Brand	Model Name	Antenna Type	Connector
1	Taiyo Yuden	AH086M555003-T	Multilayer Monopole	Surface Mount

Ant.	Port	Gain (dBi)	
		3494.4MHz	3993.6MHz
1	1	2.3	2.6

For UWB function:

Ant. 1 (port 1) could transmit/receive.

1.1.3 Type of EUT

Operational Condition	
EUT Power Type	From host system / Battery
Type of EUT	
☐	Stand-alone
☒	Combined (EUT where the radio part is fully integrated within another device) Combined Equipment - Brand Name / Model No.: TRIO MOBIL / UA2-PSC-V2
☐	Plug-in radio (EUT intended for a variety of host systems) Host System - Brand Name / Model No.: …
☐	Other:

1.1.4 Test Signal Duty Cycle

Mode	DC	DCF(dB)	T(s)	VBW(Hz) ≥ 1/T
Ultra Wide Band	1	0	n/a (DC>=0.98)	n/a (DC>=0.98)

Note. If DC < 0.98, the DCF was added while measuring Output power and PSD.

1.1.5 Table for Permissive Change

This product is an extension of original one reported under Sporton project number: FR212662
Below is the table for the change of the product with respect to the original one.

Modifications	Performance Checking
Add host (Brand: TRIO MOBIL, Model: UA2-PSC-V2)	1. The AC Conducted Emissions and Radiated Emissions below 1GHz were evaluated 2. Photographs of EUT was updated
Add bat charger(U5), accelerometer (U4) ,vibration motor driver circuit (Q6) and SOS button circuit components	

1.2 Testing Applied Standards

According to the specifications of the manufacturer, the EUT must comply with the requirements of the following standards:

- 47 CFR FCC Part 15
- ANSI C63.10-2013

The following reference test guidance is not within the scope of accreditation of TAF:

- KDB 393764 D01 v02
- KDB 412172 D01 v01r01

1.3 Testing Location Information

Test Lab.：Sporton International Inc. Hsinhua Laboratory				
☒ Hsinhua (TAF: 3785)	**ADD:** No.52, Huaya 1st Rd., Guishan Dist., Taoyuan City 333411, Taiwan (R.O.C.)			
	TEL: 886-3-327-3456		**FAX:** 886-3-327-0973	
Test site Designation No. TW3785 with FCC.				
Test Condition	**Test Site No.**	**Test Engineer**	**Test Environment**	**Test Date**
AC Conduction	CO04-HY	Terry Chang	22.1~22.9°C / 56~58%	20/Aug/2022
Radiated	03CH02-HY	Daniel Lin	25.1~26.9°C / 58~60%	19/Aug/2022
☐ Wen 33rd. St. (TAF: 3785)	**ADD:** No.14-1, Ln. 19, Wen 33rd St., Guishan Dist., Taoyuan City 333010, Taiwan (R.O.C.)			
	TEL: 886-3-318-0787		**FAX:** 886-3-318-0287	
Test site Designation No. TW0008 with FCC.				

1.4 Measurement Uncertainty

ISO/IEC 17025 requires that an estimate of the measurement uncertainties associated with the emissions test results be included in the report. The measurement uncertainties given below are based on a 95% confidence level (based on a coverage factor (k=2)

Test Items	Uncertainty	Remark
Conducted Emission (150kHz ~ 30MHz)	0.9 dB	Confidence levels of 95%
Radiated Emission (9kHz ~ 30MHz)	2.4 dB	Confidence levels of 95%
Radiated Emission (30MHz ~ 1,000MHz)	3.7 dB	Confidence levels of 95%
Temperature	0.41 °C	Confidence levels of 95%
Humidity	3.4 %	Confidence levels of 95%

2 Test Configuration of EUT

2.1 Test Condition

RF Conducted	Abbreviation	Remark
TnomVnom	Tnom	20°C
-	Vnom	120V

Note:
Tnom = Normal Temperature
Vnom = Normal Voltage

2.2 The Worst Case Configuration

Test Software	Docklight

Worst Modulation Used for Conformance Testing		
Mode	**Transmit Chains (N_{TX})**	**Test Channel Frequencies (MHz)**
UWB	1	3494.4, 3993.6

2.3 The Worst Case Measurement Configuration

The Worst Case Mode for Following Conformance Tests	
Tests Item	AC power-line conducted emissions
Condition	AC power-line conducted measurement for line and neutral Test Voltage: 120Vac / 60Hz
Operating Mode	CTX
1	USB mode

Note: CTX = Continuous Transmissions

The Worst Case Mode for Following Conformance Tests			
Tests Item	Radiated Emissions		
Test Condition	Radiated measurement If EUT consist of multiple antenna assembly (multiple antenna are used in EUT regardless of spatial multiplexing MIMO configuration), the radiated test should be performed with highest antenna gain of each antenna type.		
Operating Mode	CTX		
1	USB mode		
Operating Mode > 1GHz	CTX		
Orthogonal Planes of EUT	**X Plane**	**Y Plane**	**Z Plane**
Worst Planes of EUT	V		

Note: CTX = Continuous Transmissions

2.4 Support Equipment

Support Equipment – AC Conduction and Radiated					
No.	Equipment	Brand Name	Model Name	FCC ID	Remark
1	Notebook	HP	GPS-3030DD	-	-
2	USB Cable	NA	NA	-	-

2.5 Test Setup Diagram

Test Setup Diagram – AC Line Conducted Emission Test

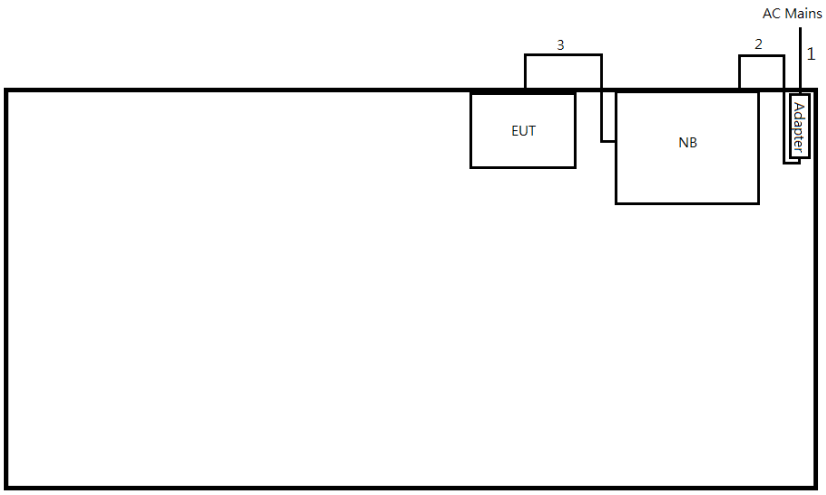

Item	Connection	Shielded	Length(m)	Remark
1	AC Power cable	No	1.8	-
2	DC Power cable	No	1.5	-
3	USB cable	No	1.5	-

Test Setup Diagram - Radiated Test

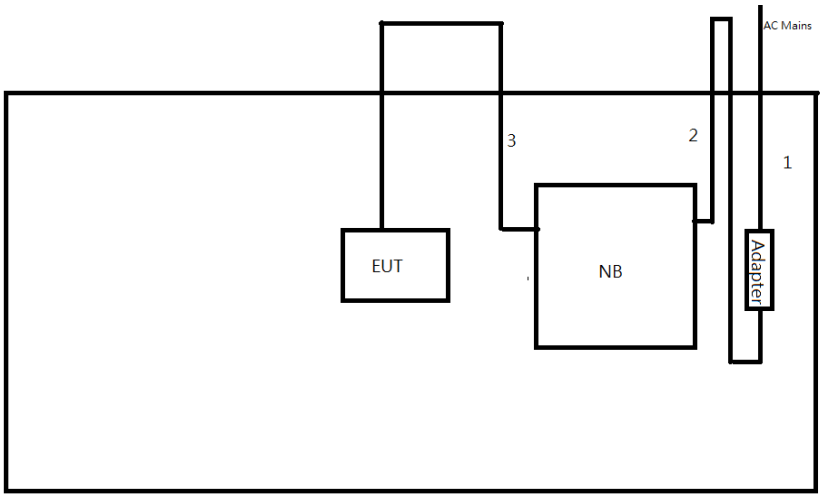

Item	Connection	Shielded	Length(m)	Remark
1	AC Power cable	No	1.8	-
2	DC Power cable	No	1.5	-
3	USB cable	No	1.5	-

3 Transmitter Test Result

3.1 AC Power-line Conducted Emissions

3.1.1 AC Power-line Conducted Emissions Limit

AC Power-line Conducted Emissions Limit		
Frequency Emission (MHz)	**Quasi-Peak**	**Average**
0.15-0.5	66 - 56 *	56 - 46 *
0.5-5	56	46
5-30	60	50
Note 1: * Decreases with the logarithm of the frequency.		

3.1.2 Measuring Instruments

Refer a test equipment and calibration data table in this test report.

3.1.3 Test Procedures

Test Method
☒ Refer as ANSI C63.10-2013, clause 6.2 for AC power-line conducted emissions.

3.1.4 Measurement Results Calculation

The measured Level is calculated using:
Corrected Reading: Raw(Read Level) +LISN(LISN Factor) + CL(Cable Loss) + AT(Attenuator).

3.1.5 Test Setup

AC Power-line Conducted Emissions

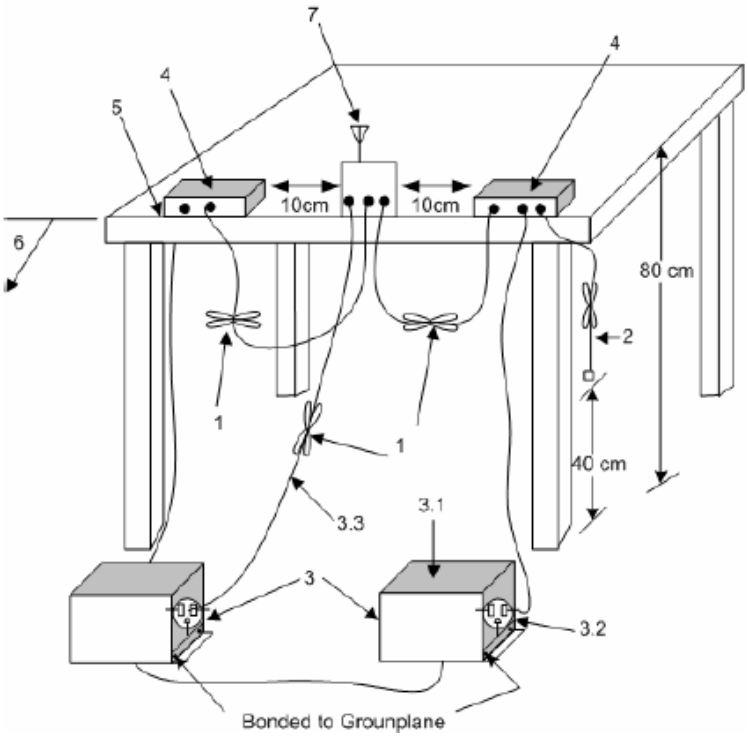

1—Interconnecting cables that hang closer than 40 cm to the ground plane shall be folded back and forth in the center forming a bundle 30 cm to 40 cm long.
2—The I/O cables that are not connected to an accessory shall be bundled in the center. The end of the cable may be terminated, if required, using the correct terminating impedance. The overall length shall not exceed 1 m.
3—EUT connected to one LISN. Unused LISN measuring port connectors shall be terminated in 50Ω loads. LISN may be placed on top of, or immediately beneath, reference ground plane.
3.1—All other equipment powered from additional LISN(s).
3.2—A multiple-outlet strip may be used for multiple power cords of non-EUT equipment.
3.3—LISN at least 80 cm from nearest part of EUT chassis.
4—Non-EUT components of EUT system being tested.
5—Rear of EUT, including peripherals, shall all be aligned and flush with edge of tabletop.
6—Edge of tabletop shall be 40 cm removed from a vertical conducting plane that is bonded to the ground plane.
7—Antenna can be integral or detachable. If detachable, then the antenna shall be attached for this test.

3.1.6 Test Result of AC Power-line Conducted Emissions

Refer as Appendix A

3.2 Radiated Emissions

3.2.1 Radiated Emissions Limit

Radiated Emissions below 960MHz and Emissions from Digital Circuitry Limit			
Frequency Range (MHz)	**Field Strength (uV/m)**	**Field Strength (dBuV/m)**	**Measure Distance (m)**
0.009~0.490	2400/F(kHz)	48.5 - 13.8	300
0.490~1.705	24000/F(kHz)	33.8 - 23	30
1.705~30.0	30	29	30
30~88	100	40	3
88~216	150	43.5	3
216~960	200	46	3
Above 960	500	54	3

Note 1: Test distance for frequencies at or above 30 MHz, measurements may be performed at a distance other than the limit distance provided they are not performed in the near field and the emissions to be measured can be detected by the measurement equipment. When performing measurements at a distance other than that specified, the results shall be extrapolated to the specified distance using an extrapolation factor of 20 dB/decade (inverse of linear distance for field-strength measurements, inverse of linear distance-squared for power-density measurements).

Note 2: Test distance for frequencies at below 30 MHz, measurements may be performed at a distance closer than the EUT limit distance; however, an attempt should be made to avoid making measurements in the near field. When performing measurements below 30 MHz at a closer distance than the limit distance, the results shall be extrapolated to the specified distance by either making measurements at a minimum of two or more distances on at least one radial to determine the proper extrapolation factor or by using the square of an inverse linear distance extrapolation factor (40 dB/decade). The test report shall specify the extrapolation method used to determine compliance of the EUT.

Radiated Emissions above 960MHz Limit	
Frequency Range (MHz)	**EIRP (dBm)**
960-1610	-75.3
1610-1990	-63.3
1990-3100	-61.3
3100-10600	-41.3
Above 10600	-61.3

Radiated Emissions in GPS Bands Limit	
Frequency Range (MHz)	**EIRP (dBm)**
1164-1240	-85.3
1559-1610	-85.3

3.2.2 Measuring Instruments

Refer a test equipment and calibration data table in this test report.

3.2.3 Test Procedures

Test Method for Radiated Emissions above 960MHz		
☒	Radiated Emissions above 960MHz	
	☒	Refer as ANSI C63.10, clause 10.3.1 for radiated measurement procedure testing.
	☒	Refer as ANSI C63.10, clause 10.3.2 for measurement distance is 3m. In some cases, it may be necessary to measure the radiated UWB emissions at a closer distance to obtain enough signal and margin to overcome the measurement system noise floor. Distance extrapolation factor = 20 log (test distance [X m]/specific distance [3 m]) (dB)
	☒	Refer as ANSI C63.10, clause 10.3.4 for rms detector procedure testing.
	☒	Refer as ANSI C63.10, clause 10.3.7 for evaluating AVG-PSD (RBW=1MHz).
	☒	Refer as ANSI C63.10, clause 10.3.10 for evaluating AVG-PSD in GPS Band (RBW≥1kHz).
☒	For radiated measurement.	
	☒	Refer as KDB 412172, clause 2.2 following eirp can be used radiated test configuration.
	☒	Refer as KDB 412172, clause 5 following eirp can be directly determined using the field strength.
	☐	Refer as KDB 412172, clause 6 following eirp can be used signal/antenna substitution techniques.

Test Method for Radiated Emissions below 960MHz and Emissions from Digital Circuitry		
☒	Measurements may be performed at a distance other than the limit distance provided they are not performed in the near field and the emissions to be measured can be detected by the measurement equipment. When performing measurements at a distance other than that specified, the results shall be extrapolated to the specified distance using an extrapolation factor of 20 dB/decade (inverse of linear distance for field-strength measurements, inverse of linear distance-squared for power-density measurements).	
☒	For the transmitter unwanted emissions shall be measured using following options below:	
	☒	Refer as ANSI C63.10, clause 4.1.4.2.3 (Reduced VBW) – Duty cycle ≥ 100%.
	☐	Refer as ANSI C63.10, clause 4.1.4.2.4 average value of pulsed emissions. Adjusted by a “duty cycle correction factor”, derived from 20log (dwell time/100 ms). Average emission = peak emission + 20 log (duty cycle).
	☒	Refer as ANSI C63.10, clause 4.1.4.2.2 measurement procedure peak limit.
☒	For radiated measurement.	
	☒	Refer as ANSI C63.10, clause 6.4 for radiated emissions below 30 MHz and test distance is 3m.
	☒	Refer as ANSI C63.10, clause 6.5 for radiated emissions 30 MHz to 1 GHz and test distance is 3m.
	☒	Refer as ANSI C63.10, clause 6.6 for radiated emissions above 1 GHz and test distance is 3m.
☒	The any unwanted emissions level shall not exceed the fundamental emission level.	

3.2.4 Measurement Results Calculation

The measured Level is calculated using:
Corrected Reading: Raw(Read Level) + AF(Antenna Factor) + CL(Cable Loss) - PA(Preamp Factor)

3.2.5 Test Setup

Radiated Emissions above 960MHz

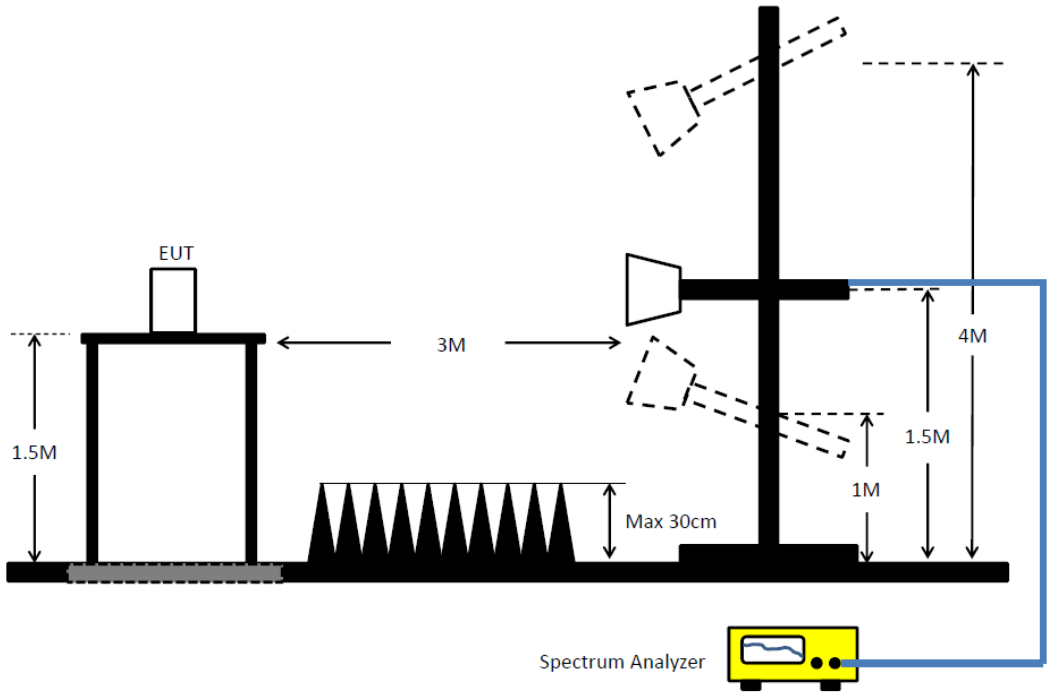

Radiated Emissions below 960MHz and Emissions from Digital Circuitry

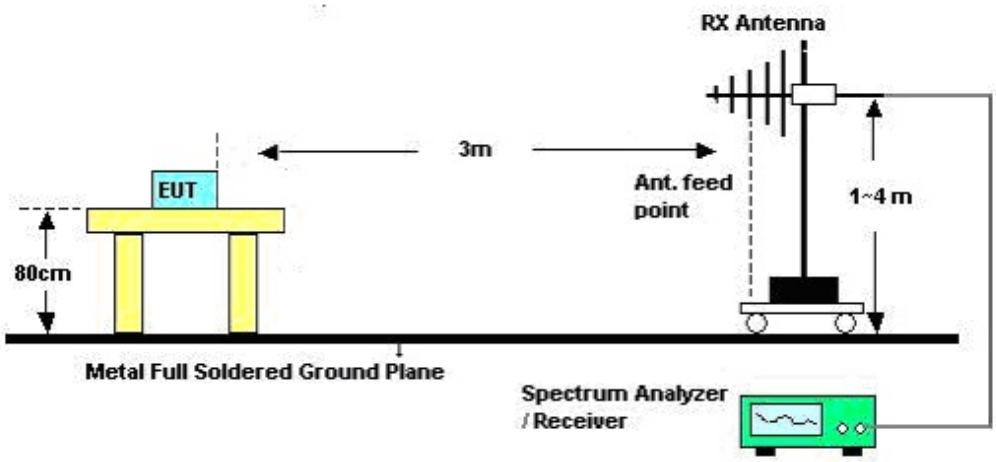

Magnetic field tests shall be performed in the frequency range of 9 kHz to 30 MHz using a calibrated loop antenna. Electric field tests shall be performed in the frequency range of 30 MHz to 1000 MHz using a calibrated bi-log antenna and the frequency range of 1 GHz to 40 GHz using a calibrated horn antenna.

3.2.6 Radiated Emissions (Below 30MHz)

All amplitude of spurious emissions that are attenuated by more than 20 dB below the permissible value has no need to be reported.

3.2.7 Test Result of Radiated Emissions

Refer as Appendix B

4 Test Equipment and Calibration Data

Instrument for AC Conduction

Instrument	Manufacturer /Brand	Model No.	Serial No.	Spec.	Calibration Date	Calibration Due Date
EMI Test Receiver	R&S	ESR3	102051	9kHz ~ 3.6GHz	13/May/2022	12/May/2023
Two-Line V-Network	R&S	ENV 216	100003	9kHz ~ 30MHz	18/Feb/2022	17/Feb/2023
RF Cable 5m	TITAN	TITAN	CO04-cable-01	9 kHz~200MHz	01/Mar/2022	28/Feb/2023
Impuls Begrenzer Pulse Limiter	SCHWARZBECK	VTSD 9561-F	9561-F041	9kHz ~ 30MHz	26/Oct/2021	25/Oct/2022
Software	Sporton	SENSE-EMI	V5.10.8.2	-	NCR	NCR

NCR: No Calibration Required

Instrument for Radiated Test

Instrument	Manufacturer /Brand	Model No.	Serial No.	Spec.	Calibration Date	Calibration Due Date
3m Semi Anechoic Chamber	SIDT FRANKONIA	SAC-3M	03CH02-HY	30MHz~1GHz 3m	31/Jul/2022	30/Jul/2023
Signal Analyzer	R&S	FSU26	100015	9kHz~40GHz	25/Oct/2021	24/Oct/2022
Amplifier	Agilent	8447D	2944A11149	100kHz~1.3GHz	28/Jun/2022	27/Jun/2023
Bilog Antenna & 5dB Attenuator	SCHAFFNER / MTJ	CBL 6112B / MTJ6102-05	2723 / 2	30MHz~1GHz	04/Sep/2021	03/Sep/2022
RF Cable	MVE	400LL	MVE-1-0802	9kHz~30MHz	04/May/2022	03/May/2023
RF Cable	MVE	400LL	MVE-1-0802	30MHz~1GHz	04/May/2022	03/May/2023
Loop Antenna	TESEQ	HLA 6120	31244	9kHz~30MHz	18/Mar/2022	17/Mar/2023
EMI Test Receiver	R&S	ESR3	102052	9kHz~3.6GHz	13/May/2022	12/May/2023
SENSE-UWB	Sporton	V5.10.6D	N/A	N/A	N/A	N/A

Summary

Mode	Result	Type	Freq (Hz)	Level (dBuV)	Limit (dBuV)	Margin (dB)	Condition
Mode 1	Pass	QP	190.596k	51.95	64.01	-12.06	Line

Result

Mode	Result	Type	Freq (Hz)	Level (dBuV)	Limit (dBuV)	Margin (dB)	Condition	Comments
Mode 1	Pass	QP	190.596k	51.95	64.01	-12.06	Line	-
Mode 1	Pass	AV	190.596k	35.67	54.01	-18.34	Line	-
Mode 1	Pass	QP	246.077k	44.80	61.89	-17.09	Line	-
Mode 1	Pass	AV	246.077k	24.70	51.89	-27.19	Line	-
Mode 1	Pass	QP	318.98k	38.94	59.73	-20.79	Line	-
Mode 1	Pass	AV	318.98k	23.43	49.73	-26.30	Line	-
Mode 1	Pass	QP	1.706M	25.44	56.00	-30.56	Line	-
Mode 1	Pass	AV	1.706M	17.88	46.00	-28.12	Line	-
Mode 1	Pass	QP	3.599M	26.01	56.00	-29.99	Line	-
Mode 1	Pass	AV	3.599M	20.19	46.00	-25.81	Line	-
Mode 1	Pass	QP	13.223M	34.58	60.00	-25.42	Line	-
Mode 1	Pass	AV	13.223M	28.34	50.00	-21.66	Line	-
Mode 1	Pass	QP	193.664k	51.47	63.88	-12.41	Neutral	-
Mode 1	Pass	AV	193.664k	36.09	53.88	-17.79	Neutral	-
Mode 1	Pass	QP	251.038k	45.21	61.72	-16.51	Neutral	-
Mode 1	Pass	AV	251.038k	28.45	51.72	-23.27	Neutral	-
Mode 1	Pass	QP	320.256k	38.46	59.71	-21.25	Neutral	-
Mode 1	Pass	AV	320.256k	23.98	49.71	-25.73	Neutral	-
Mode 1	Pass	QP	795.762k	29.46	56.00	-26.54	Neutral	-
Mode 1	Pass	AV	795.762k	25.62	46.00	-20.38	Neutral	-
Mode 1	Pass	QP	3.192M	31.05	56.00	-24.95	Neutral	-
Mode 1	Pass	AV	3.192M	22.02	46.00	-23.98	Neutral	-
Mode 1	Pass	QP	12.655M	34.42	60.00	-25.58	Neutral	-
Mode 1	Pass	AV	12.655M	28.17	50.00	-21.83	Neutral	-

Conducted Emissions at Powerline_Mode 1

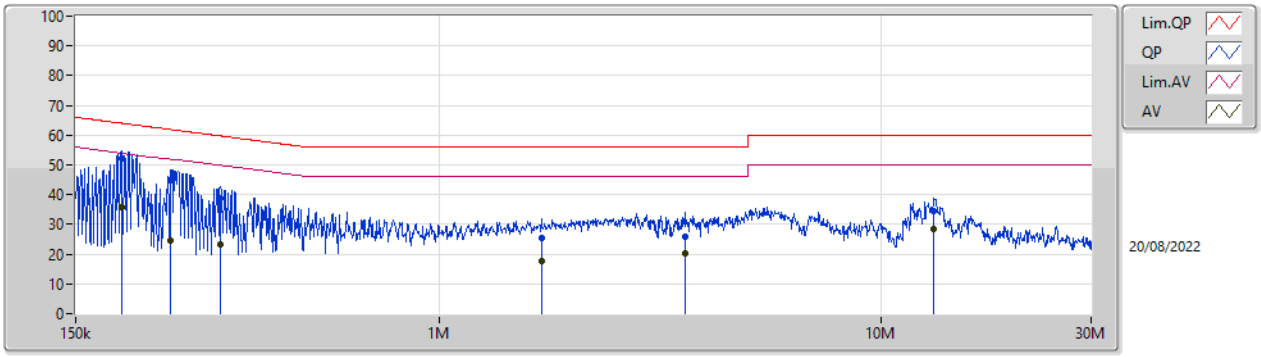

Type	Freq	Level	Limit	Margin	Factor	Condition	Comment	Raw	LISN	CL	AT
	(Hz)	(dBuV)	(dBuV)	(dB)	(dB)			(dBuV)	(dB)	(dB)	(dB)
QP	190.596k	51.95	64.01	-12.06	19.63	Line	-	32.32	9.69	0.03	9.91
AV	190.596k	35.67	54.01	-18.34	19.63	Line	-	16.04	9.69	0.03	9.91
QP	246.077k	44.80	61.89	-17.09	19.63	Line	-	25.17	9.69	0.03	9.91
AV	246.077k	24.70	51.89	-27.19	19.63	Line	-	5.07	9.69	0.03	9.91
QP	318.98k	38.94	59.73	-20.79	19.64	Line	-	19.30	9.69	0.04	9.91
AV	318.98k	23.43	49.73	-26.30	19.64	Line	-	3.79	9.69	0.04	9.91
QP	1.706M	25.44	56.00	-30.56	19.68	Line	-	5.76	9.69	0.07	9.92
AV	1.706M	17.88	46.00	-28.12	19.68	Line	-	-1.80	9.69	0.07	9.92
QP	3.599M	26.01	56.00	-29.99	19.73	Line	-	6.28	9.69	0.12	9.92
AV	3.599M	20.19	46.00	-25.81	19.73	Line	-	0.46	9.69	0.12	9.92
QP	13.223M	34.58	60.00	-25.42	19.84	Line	-	14.74	9.69	0.22	9.93
AV	13.223M	28.34	50.00	-21.66	19.84	Line	-	8.50	9.69	0.22	9.93

Conducted Emissions at Powerline_Mode 1

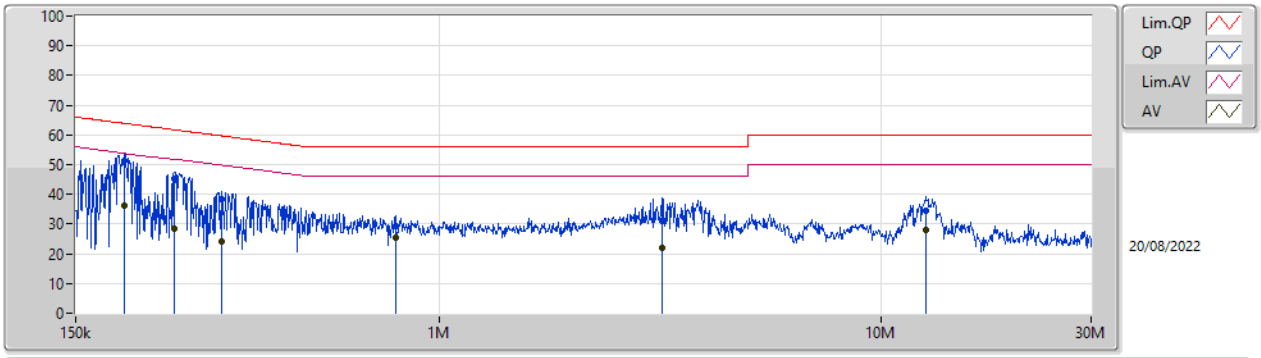

Type	Freq	Level	Limit	Margin	Factor	Condition	Comment	Raw	LISN	CL	AT
	(Hz)	(dBuV)	(dBuV)	(dB)	(dB)			(dBuV)	(dB)	(dB)	(dB)
QP	193.664k	51.47	63.88	-12.41	19.66	Neutral	-	31.81	9.72	0.03	9.91
AV	193.664k	36.09	53.88	-17.79	19.66	Neutral	-	16.43	9.72	0.03	9.91
QP	251.038k	45.21	61.72	-16.51	19.66	Neutral	-	25.55	9.72	0.03	9.91
AV	251.038k	28.45	51.72	-23.27	19.66	Neutral	-	8.79	9.72	0.03	9.91
QP	320.256k	38.46	59.71	-21.25	19.67	Neutral	-	18.79	9.72	0.04	9.91
AV	320.256k	23.98	49.71	-25.73	19.67	Neutral	-	4.31	9.72	0.04	9.91
QP	795.762k	29.46	56.00	-26.54	19.70	Neutral	-	9.76	9.73	0.05	9.92
AV	795.762k	25.62	46.00	-20.38	19.70	Neutral	-	5.92	9.73	0.05	9.92
QP	3.192M	31.05	56.00	-24.95	19.78	Neutral	-	11.27	9.75	0.11	9.92
AV	3.192M	22.02	46.00	-23.98	19.78	Neutral	-	2.24	9.75	0.11	9.92
QP	12.655M	34.42	60.00	-25.58	20.06	Neutral	-	14.36	9.92	0.21	9.93
AV	12.655M	28.17	50.00	-21.83	20.06	Neutral	-	8.11	9.92	0.21	9.93

Summary

Mode	Result	Type	Freq (Hz)	Level (dBuV/m)	Limit (dBuV/m)	Margin (dB)	Dist (m)	Condition	Azimuth (°)	Height (m)	Comments
3.1-10.6GHz	-	-	-	-	-	-	-	-	-	-	-
Ultra Wide Band_Nss1_1TX	Pass	QP	280.26M	45.88	46.00	-0.12	3	Horizontal	4	1.00	-

Result

Mode	Result	Type	Freq (Hz)	Level (dBuV/m)	Limit (dBuV/m)	Margin (dB)	Dist (m)	Condition	Azimuth (°)	Height (m)	Comments
Ultra Wide Band_Nss1_1TX	-	-	-	-	-	-	-	-	-	-	-
3494.4MHz	Pass	PK	33.88M	31.77	40.00	-8.23	3	Vertical	0	1.00	-
3494.4MHz	Pass	PK	53.28M	29.43	40.00	-10.57	3	Vertical	0	1.00	-
3494.4MHz	Pass	PK	200.72M	27.86	43.50	-15.64	3	Vertical	0	1.00	-
3494.4MHz	Pass	PK	284.14M	39.97	46.00	-6.03	3	Vertical	0	1.00	-
3494.4MHz	Pass	PK	313.24M	35.73	46.00	-10.27	3	Vertical	0	1.00	-
3494.4MHz	Pass	PK	592.6M	31.22	46.00	-14.78	3	Vertical	0	1.00	-
3494.4MHz	Pass	PK	49.4M	31.30	40.00	-8.70	3	Horizontal	360	1.00	-
3494.4MHz	Pass	PK	194.9M	35.65	43.50	-7.85	3	Horizontal	360	1.00	-
3494.4MHz	Pass	PK	394.72M	31.78	46.00	-14.22	3	Horizontal	360	1.00	-
3494.4MHz	Pass	PK	532.46M	30.83	46.00	-15.17	3	Horizontal	360	1.00	-
3494.4MHz	Pass	PK	672.14M	31.01	46.00	-14.99	3	Horizontal	360	1.00	-
3494.4MHz	Pass	QP	285.4M	45.34	46.00	-0.66	3	Horizontal	29	1.00	-
3993.6MHz	Pass	PK	51.34M	28.35	40.00	-11.65	3	Vertical	360	1.00	-
3993.6MHz	Pass	PK	200.72M	27.26	43.50	-16.24	3	Vertical	360	1.00	-
3993.6MHz	Pass	PK	282.2M	39.19	46.00	-6.81	3	Vertical	360	1.00	-
3993.6MHz	Pass	PK	315.18M	37.45	46.00	-8.55	3	Vertical	360	1.00	-
3993.6MHz	Pass	PK	501.42M	30.50	46.00	-15.50	3	Vertical	360	1.00	-
3993.6MHz	Pass	PK	621.7M	32.77	46.00	-13.23	3	Vertical	360	1.00	-
3993.6MHz	Pass	PK	41.64M	25.77	40.00	-14.23	3	Horizontal	0	1.00	-
3993.6MHz	Pass	PK	202.66M	32.91	43.50	-10.59	3	Horizontal	0	1.00	-
3993.6MHz	Pass	PK	390.84M	34.01	46.00	-11.99	3	Horizontal	0	1.00	-
3993.6MHz	Pass	PK	482.02M	31.28	46.00	-14.72	3	Horizontal	0	1.00	-
3993.6MHz	Pass	PK	612M	30.51	46.00	-15.49	3	Horizontal	0	1.00	-
3993.6MHz	Pass	QP	280.26M	45.88	46.00	-0.12	3	Horizontal	4	1.00	-

Ultra Wide Band_Nss1_1TX

3494.4MHz_USB

19/08/2022

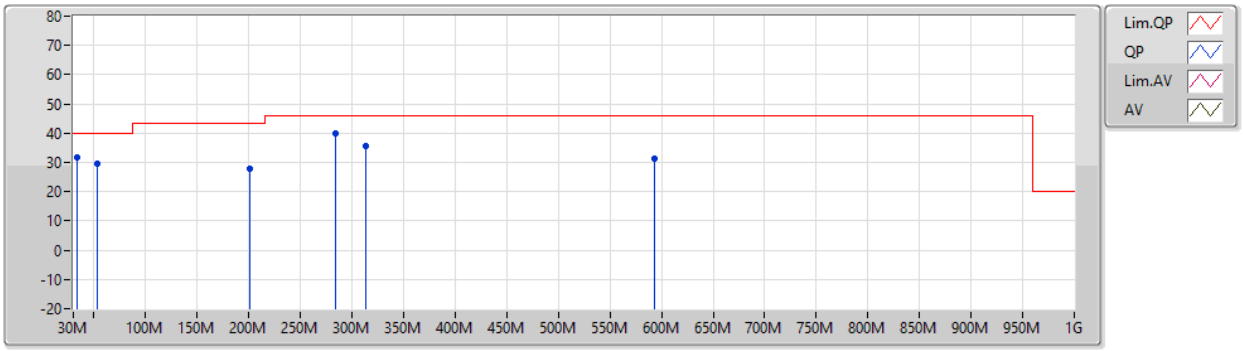

Type	Freq	Level	Limit	Margin	Factor	Dist	Condition	Azimuth	Height	Comment	Raw	AF	CL	PA
	(Hz)	(dBuV/m)	(dBuV/m)	(dB)	(dB)	(m)		(°)	(m)		(dBuV)	(dB)	(dB)	(dB)
PK	33.88M	31.77	40.00	-8.23	-4.57	3	Vertical	0	1.00	-	36.34	21.11	1.02	26.70
PK	53.28M	29.43	40.00	-10.57	-14.23	3	Vertical	0	1.00	-	43.66	12.22	1.07	27.52
PK	200.72M	27.86	43.50	-15.64	-10.82	3	Vertical	0	1.00	-	38.68	14.56	2.03	27.41
PK	284.14M	39.97	46.00	-6.03	-6.68	3	Vertical	0	1.00	-	46.65	18.07	2.43	27.18
PK	313.24M	35.73	46.00	-10.27	-5.98	3	Vertical	0	1.00	-	41.71	18.73	2.56	27.27
PK	592.6M	31.22	46.00	-14.78	-1.02	3	Vertical	0	1.00	-	32.24	23.89	3.56	28.47

Ultra Wide Band_Nss1_1TX

3494.4MHz_USB

19/08/2022

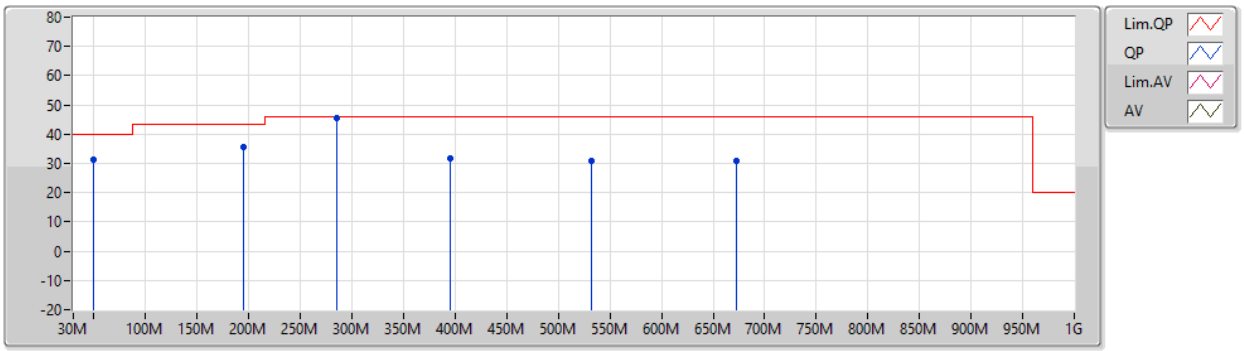

Type	Freq	Level	Limit	Margin	Factor	Dist	Condition	Azimuth	Height	Comment	Raw	AF	CL	PA
	(Hz)	(dBuV/m)	(dBuV/m)	(dB)	(dB)	(m)		(°)	(m)		(dBuV)	(dB)	(dB)	(dB)
PK	49.4M	31.30	40.00	-8.70	-12.90	3	Horizontal	360	1.00	-	44.20	13.45	1.04	27.39
PK	194.9M	35.65	43.50	-7.85	-11.03	3	Horizontal	360	1.00	-	46.68	14.40	2.00	27.43
PK	394.72M	31.78	46.00	-14.22	-4.28	3	Horizontal	360	1.00	-	36.06	20.66	2.86	27.80
PK	532.46M	30.83	46.00	-15.17	-2.27	3	Horizontal	360	1.00	-	33.10	22.89	3.37	28.53
PK	672.14M	31.01	46.00	-14.99	-0.52	3	Horizontal	360	1.00	-	31.53	24.19	3.75	28.46
QP	285.4M	45.34	46.00	-0.66	-6.66	3	Horizontal	29	1.00	-	52.00	18.08	2.44	27.18

Ultra Wide Band_Nss1_1TX

3993.6MHz_USB

19/08/2022

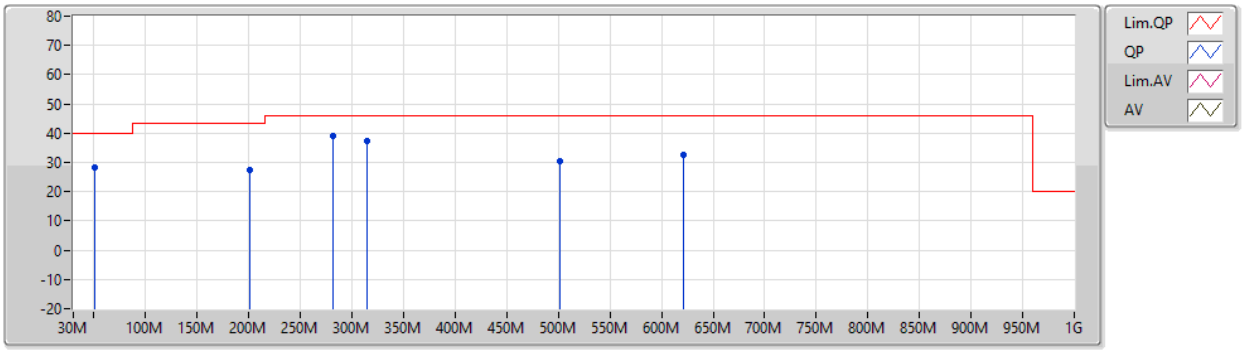

Type	Freq	Level	Limit	Margin	Factor	Dist	Condition	Azimuth	Height	Comment	Raw	AF	CL	PA
	(Hz)	(dBuV/m)	(dBuV/m)	(dB)	(dB)	(m)		(°)	(m)		(dBuV)	(dB)	(dB)	(dB)
PK	51.34M	28.35	40.00	-11.65	-13.69	3	Vertical	360	1.00	-	42.04	12.72	1.05	27.46
PK	200.72M	27.26	43.50	-16.24	-10.82	3	Vertical	360	1.00	-	38.08	14.56	2.03	27.41
PK	282.2M	39.19	46.00	-6.81	-6.72	3	Vertical	360	1.00	-	45.91	18.04	2.42	27.18
PK	315.18M	37.45	46.00	-8.55	-5.95	3	Vertical	360	1.00	-	43.40	18.76	2.57	27.28
PK	501.42M	30.50	46.00	-15.50	-2.29	3	Vertical	360	1.00	-	32.79	22.75	3.31	28.35
PK	621.7M	32.77	46.00	-13.23	-0.61	3	Vertical	360	1.00	-	33.38	24.24	3.64	28.49

Ultra Wide Band_Nss1_1TX

3993.6MHz_USB

19/08/2022

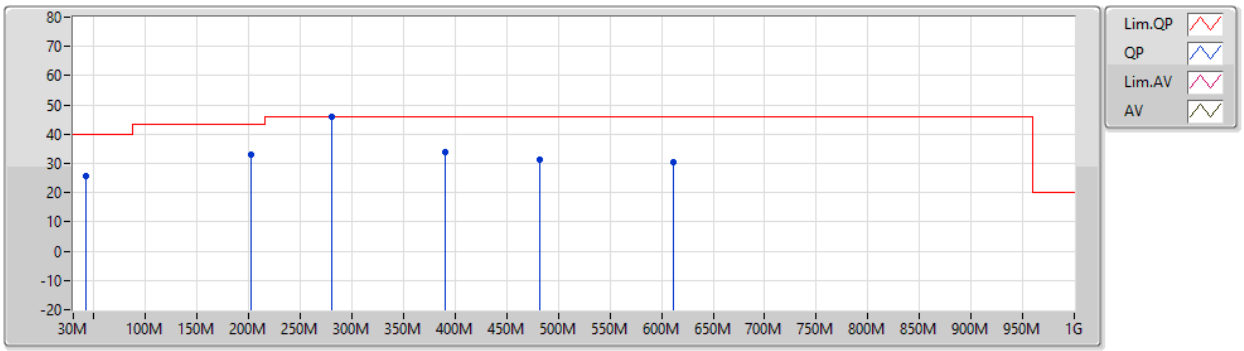

Type	Freq	Level	Limit	Margin	Factor	Dist	Condition	Azimuth	Height	Comment	Raw	AF	CL	PA
	(Hz)	(dBuV/m)	(dBuV/m)	(dB)	(dB)	(m)		(°)	(m)		(dBuV)	(dB)	(dB)	(dB)
PK	41.64M	25.77	40.00	-14.23	-9.09	3	Horizontal	0	1.00	-	34.86	16.80	1.03	26.92
PK	202.66M	32.91	43.50	-10.59	-10.81	3	Horizontal	0	1.00	-	43.72	14.55	2.04	27.40
PK	390.84M	34.01	46.00	-11.99	-4.43	3	Horizontal	0	1.00	-	38.44	20.50	2.85	27.78
PK	482.02M	31.28	46.00	-14.72	-2.41	3	Horizontal	0	1.00	-	33.69	22.67	3.23	28.31
PK	612M	30.51	46.00	-15.49	-0.77	3	Horizontal	0	1.00	-	31.28	24.08	3.62	28.47
QP	280.26M	45.88	46.00	-0.12	-6.76	3	Horizontal	4	1.00	-	52.64	18.01	2.41	27.18