Prüfbericht-Nr.: *Test report no.:*	**IN23WWR8 001**	**Auftrags-Nr.:** *Order no.:*	146741356 0020
Kunden-Referenz-Nr.: *Client reference no.:*	2026143	**Auftragsdatum:** *Order date:*	2022-12-01
Auftraggeber: *Client:*	TessolveDTS Inc 226 Airport Parkway Suite 100, Sanjose, CALIFORNIA, U.S.A, 95110		
Prüfgegenstand: *Test item:*	Moter Automotive application Gateway		
Bezeichnung.: *Identification .:*	MT-V2001		
Auftrags-Inhalt: *Order content:*	Testing and issue of Test Report with Grant Certificate		
Prüfgrundlage: *Test specification:*	FCC Part 24E, FCC Part15 SubpartC 15.207		
Wareneingangsdatum: *Date of sample receipt:*	2022-12-06		
Prüfmuster-Nr & Serien-Nr.: *Test sample no & serial no.:*	A003384947-001 Engineering Sample		
Prüfzeitraum: *Testing period:*	2022-12-06 - 2022-12-15		
Ort der Prüfung: *Place of testing:*	Wireless laboratory, Bangalore		
Prüflaboratorium: *Testing laboratory:*	TÜV Rheinland (India) Pvt.Ltd., 27/B, 2nd Cross, Electronic City Phase1 Bangalore -560 100, India FCC Test site registration number: 496599 ISED Test site registration number: 3466E-1		
Prüfergebnis*: *Test result*:*	Pass		

geprüft von:		**genehmigt von:** *authorized by:*	
Datum: *Date:* 2023-01-23	M.V. Naveen Kumar	**Ausstellatum:** *Issue date:* 2023-04-26	M.K.N
Stellung / *Position:*	**M.V.Naveen Kumar** **Engineer**	**Stellung** / *Position:*	**Madhu K.N** **Senior Engineer**
Sonstiges / *Other:*	FCC ID: 2A6PTMT2V1001		

Zustand des Prüfgegenstandes bei Anlieferung: **Prüfmuster vollständig und unbeschädigt**
Condition of the test item at delivery: ***Test item complete and undamaged***

* Legende:	1 = sehr gut	2 = gut	3 = befriedigend	4 = ausreichend	5 = mangelhaft
	P(ass) = entspricht o.g. Prüfgrundlage(n)		F(ail) = entspricht nicht o.g. Prüfgrundlage(n)	N/A = nicht anwendbar	N/T = nicht getestet
** Legend:*	*1 = very good*	*2 = good*	*3 = satisfactory*	*4 = sufficient*	*5 = poor*
	P(ass) = passed a.m. test specification(s)		*F(ail) = failed a.m. test specification(s)*	*N/A = not applicable*	*N/T = not tested*

Dieser Prüfbericht bezieht sich nur auf das o.g. Prüfmuster und darf ohne Genehmigung der Prüfstelle nicht auszugsweise vervielfältigt werden. Dieser Bericht berechtigt nicht zur Verwendung eines Prüfzeichens.
This test report only relates to the a. m. test sample. Without permission of the test center this test report is not permitted to be plicated in extracts. This test report does not entitle to carry any test mark.

TÜV Rheinland (India) Pvt. Ltd, Plot No.27/B, 2nd Cross, Electronic city, Industrial Area, Phase I, Hosur Road Bangalore-560 100, India
Mail: info@ind.tuv.com · Web: www.ind.tuv.com

1	Alle eingesetzten Prüfmittel waren zum angegebenen Prüfzeitraum gemäß eines festgelegten Kalibrierungsprogramms unseres Prüfhauses kalibriert. Sie entsprechen den in den Prüfprogrammen hinterlegten Anforderungen. Die Rückverfolgbarkeit der eingesetzten Prüfmittel ist durch die Einhaltung der Regelungen unseres Managementsystems gegeben. Detaillierte Informationen bezüglich Prüfkonditionen, Prüfequipment und Messunsicherheiten sind im Prüflabor vorhanden und können auf Wunsch bereitgestellt werden. *The equipment used during the specified testing period was calibrated according to our test laboratory calibration program. The equipment fulfils the requirements included in the relevant standards. The traceability of the test equipment used is ensured by compliance with the regulations of our management system.* *Detailed information regarding test conditions, equipment and measurement uncertainty is available in the test laboratory and could be provided on request.*
2	Wie vertraglich vereinbart, wurde dieses Dokument nur digital unterzeichnet. Der TÜV Rheinland hat nicht überprüft, welche rechtlichen oder sonstigen diesbezüglichen Anforderungen für dieses Dokument gelten. Diese Überprüfung liegt in der Verantwortung des Benutzers dieses Dokuments. Auf Verlangen des Kunden kann der TÜV Rheinland die Gültigkeit der digitalen Signatur durch ein gesondertes Dokument bestätigen. Diese Anfrage ist an unseren Vertrieb zu richten. Eine Umweltgebühr für einen solchen zusätzlichen Service wird erhoben. *As contractually agreed, this document has been signed digitally only. TUV Rheinland has not verified and unable to verify which legal or other pertaining requirements are applicable for this document. Such verification is within the responsibility of the user of this document. Upon request by its client, TUV Rheinland can confirm the validity of the digital signature by a separate document. Such request shall be addressed to our Sales department. An environmental fee for such additional service will be charged.*
3	Prüfklausel mit der Note * wurden an qualifizierte Unterauftragnehmer vergeben und sind unter der jeweiligen Prüfklausel des Berichts beschrieben. Abweichungen von Prüfspezifikation(en) oder Kundenanforderungen sind in der jeweiligen Prüfklausel im Bericht aufgeführt. *Test clauses with remark of * are subcontracted to qualified subcontractors and descripted under the respective test clause in the report.* *Deviations of testing specification(s) or customer requirements are listed in specific test clause in the report.*
4	Die Entscheidungsregel für Konformitätserklärungen in diesem Prüfbericht basiert auf der "Null-Grenzwert-Regel" und der "Einfachen Akzeptanz" gemäß ILAC G8:2019 und IEC Guide 115:2021, es sei denn, in der auf Seite 1 dieses Berichts genannten angewandten Norm ist etwas anderes festgelegt oder vom Kunden gewünscht. Dies bedeutet, dass die Messunsicherheit nicht berücksichtigt wird und daher auch nicht im Prüfbericht angegeben wird. *The decision rule for statements of conformity in this test report is based on the "Zero Guard Band Rule" and "Simple Acceptance" in accordance with ILAC G8:2019 and IEC Guide 115:2021, unless otherwise specified in the applied standard mentioned on Page 1 of this report or requested by the customer. This means that measurement uncertainty is not taken in account and hence also not declared in the test report.*

TEST SUMMARY

Test Item	FCC Clause	Results
Conducted Output Average Power and Peak to Average Power ratio	§2.1046 §24.232 (c) & (d)	Pass
Equivalent Isotropic Radiated Power (EIRP) / Effective Radiated Power (ERP)	§2.1046 §24.232 (c) & (d)	Pass
Field strength of spurious radiation	§2.1053 §24.238	Pass
Frequency Stability	§2.1055 §24.235	N/T
Emission Bandwidth and Occupied Bandwidth	§2.1049	N/T
Band Edge	§2.1051 §24.238	N/T
Spurious emissions at antenna terminals	§2.1051 §24.238	N/T
Conducted Emissions on A.C Power Lines	§FCC 15.207	Pass

Note:

N/T: Not Tested since **Motor Automotive application Gateway** product uses certified RF modules with **FCC ID: XMR2021EM05G**, Hence the above mentioned test cases are excluded and which can be found in the module test report of respective FCC ID

Product	Applicant	FCC ID	Report No	Issued By	Grant Date
EM05-G	Quectel Wireless Solutions Company Limited	XMR2021EM05G	SHR/2021/3000701	SGS-CSTC Standards Technical Service Co., Ltd. Shenzhen Branch	2021/06/23

Product Category: Electronics Testing
Test Discipline: EMC Test Facility

REVISION HISTORY OF THIS REPORT

Report Number	Version	Description	Issue date
IN23WWR8 001	01	Initial issue of report	2023-04-26

Table of Contents

1 GENERAL REMARKS 6
1.1 Attachments 6
2 TEST SITES 7
2.1 Testing Facilities 7
2.2 List of Test and Measurement Instruments 7
3 GENERAL PRODUCT INFORMATION 8
3.1 Product Function and Intended Use 8
3.2 Ratings and System Details of Equipment under Test 8
3.3 Measurement Uncertainty 9
4 TEST SET-UP AND OPERATION MODE 10
4.1 Principle of Configuration Selection 10
4.2 UUT Operation and Software 10
4.3 Special Accessories and Auxiliary Equipment 10
4.4 Countermeasures to achieve EMC Compliance 10
4.5 List of frequencies 10
4.6 Report references 11
5 Operational Description of the product 12
6 TEST METHODOLOGY 13
6.1 Conducted Spurious Emission Test on AC Power Line 13
6.1.1 Test Setup Configuration 13
6.2 Radiated Emission Test 14
6.2.1 Test Setup Configuration 14
7 TEST RESULTS 18
7.1 PEAK – Average Ratio 18
7.2 EFFECTIVE (ISOTROPIC) RADIATED POWER 32
7.3 Field Strength of Spurious Radiation 46
8 Conducted Spurious Emission Test on AC Power Line 66
9 LIST OF TABLES 69
10 LIST OF FIGURES 69

1 GENERAL REMARKS

1.1 Attachments

All attachments are part of this test report and are issued in separate document

1: TEST SETUP PHOTOS

2: EUT EXTERNAL PHOTOS

3: EUT INTERNAL PHOTOS

4: FCC LABEL AND LABEL LOCATION

5: BLOCK DIAGRAM

6: SPECIFICATION OF EUT

7: SCHEMATIC DIAGRAM

8: BILL OF MATERIAL

9: USER MANUAL

10: MAXIMUM PERMISSIBLE EXPOSURE INFORMATION

2 TEST SITES

2.1 Testing Facilities

1. TÜV Rheinland (India) Pvt.Ltd.,
   27/B, 2nd Cross,
   ElectronicCityPhase1
   Bangalore – 560 100,
   India

2. TUV Rheinland (India) Private Limited
   108 , Beside ISBR Business School,
   Electronic city Phase I
   Bangalore - 560 100.
   India

2.2 List of Test and Measurement Instruments

Table 1: List of test and measurement instruments

Equipment	Manufacturer	Model Name	Serial Number	Firmware Versions	Calibration Due Date	Periodicity	Test Facility
Radio Communication tester	Rohde & Schwarz	CMW 500	158345	-	20.08.2023	Yearly	Radiated Spurious Emission
EMI Receiver	Rohde & Schwarz	ESW 44	101732	4.73 SP5	04.08.2023	Yearly	
Active loop antenna	Frankonia	LAX-10	LAX-10-800	-	31.01.2023	Yearly	
Baloon and Biconical Antenna	Schwarzbeck mess-elektronik	VHBB-9124 / BBA-9106	01028	-	03.02.2023	Yearly	
Log-Periodic Antenna	Schwarzbeck mess-elektronik	VUSLP-9111B	9111B-111	-	26.01.2023	Yearly	
Horn Antenna	Schwarzbeck	BBHA 9120 D	9120D-01944	-	11.10.2023	Yearly	
EMI Test Receiver	Rohde & Schwarz	ESW44	101773	1.72.SP1	12.02.2023	Yearly	
Semi Anechoic Chamber	Frankonia	-	-	-	-	-	
Fully Anechoic Chamber	Albatross	-	-	-	-	-	
EMI Receiver	Rohde & Schwarz	ESR7	101133	3.48 SP3	22.07.2023	Yearly	Conducted AC Power line Test
Line Impedance Stabilization Network	Rohde & Schwarz	ENV 216	101434	-	11.04.2023	Yearly	
Pulse Limiter	Rohde & Schwarz	ESH3-Z2	100811	-	12.07.2023	Yearly	

Table 2: Instrument application Software versions

SL. No.	Test Type	Application software	Version
1	Radiated spurious emission measurement in SAC	EMC 32	10.60.00
2	Radiated spurious emission measurement in FAC	EMC 32	10.60.20

3 GENERAL PRODUCT INFORMATION

3.1 Product Function and Intended Use

This SoM is based on a ICEBERG100_SOM high-performance vehicle network processor that combine controller area network (CAN), local interconnect network (LIN), and FlexRay networking with high-data-rate Ethernet networking.

3.2 Ratings and System Details of Equipment under Test

Table 3: Ratings and System Details as declared by Client*

Radio Protocol	LTE				
LTE E-UTRA operating bands	Band	Bandwidth (MHz)	UL Frequency (MHz)	DL Frequency (MHz)	Modulation
	2	1.4, 3, 5, 10, 15, 20	1850.7 - 1909.3	1930.7- 1989.3	QPSK, 16QAM
	25	1.4, 3, 5, 10, 15, 20	1850 – 1915	1930.0 - 1995	QPSK, 16QAM
WCDMA UMTS Operating Band	2	-	1850 - 1910	1930 to 1990	QPSK
Transmitted Power for LTE (dBm)	Band	Power Class	Max. Conducted Average. Output Power		
	2	Power Class 3: 23dBm	24.32dBm@CB 3MHz,QPSK		
	25	Power Class 3: 23dBm	24.46dBm@CB 5MHz,QPSK		
Transmitted Power for WCDMA (dBm)	2	Power class 3: 24dBm	23.26dBm@1852.40		
Antenna Type	Main Antenna – I-Bar Patch Antenna Diversity Antenna - I-Bar Patch Antenna				
Number of Antenna	Main – 1 & Diversity – 1				
Antenna Gain	Refer Table 4				
Supply Voltage to Product	12VDC Through AC-DC Adapter				
Environmental conditions Storage	–40°C to +70°C				
Environmental conditions Operating	–40°C to +70°C				
EUT Dimension (L x W x H**)**	190 X 128 X 41.75 (mm)				

Antenna Type	**Frequency Range (MHz)**	**Antenna Gain (dBi)**
External/ Diversity Antenna	700MHz to 2700MHz	3.0

Table 4: Antenna Gain

***Disclaimer:**
The information/data is supplied by the client and the same is considered to arrive at the final value.
Any changes made apart from the specified specification, can directly impact on the tests results. Refer the products user manual for more details.

3.3 Measurement Uncertainty

Reported uncertainties represent expanded uncertainties expressed at approximately the 95% confidence level using a coverage factor of $k = 2$

Table 5: Measurement Uncertainty

Parameter	Uncertainty
Occupied Channel Bandwidth	±5 %
RF output power, conducted	±1.5 dB
Power Spectral Density, conducted	±3 dB
Unwanted Emissions, conducted	±3 dB
All emissions, radiated	±6 dB
Temperature	±3 ℃
Supply Voltages	±3 %
Time	±5 %

4 TEST SET-UP AND OPERATION MODE

4.1 Principle of Configuration Selection

Transmission was enabled with highest possible duty cycle on low, mid and high channels

4.2 UUT Operation and Software

Hardware Name & version: moter-1.12.0-mtu-att.rootfs.sdcard.gz

Software Name & version : Moter_V2_SOM_CB

4.3 Special Accessories and Auxiliary Equipment

-None

4.4 Countermeasures to achieve EMC Compliance

- None

4.5 List of frequencies

Table 6: List of Center frequencies

Protocol	Band	UL Frequency (MHz)	DL Frequency (MHz)
LTE	2	1850 - 1909.9	1930 - 1989.9
	25	1850 - 1915	1930.0 - 1995
WCDMA	2	1850 - 1910	1930 - 1990

Note:

TUV Sample Identification number: A003384947-001 – Radiated test Sample & Conducted test Sample

4.6 Report references

Note: Motor Automotive application Gateway has multiple protocols. All the supported wireless protocols and their respective test results are issued in separate test reports, following table lists the report numbers.

Radio Protocol	Report Number
RF test report for FCC Part 22	IN23RLHX 001
RF test report for FCC Part 24 -(This report)	**IN23WWR8 001**
RF test report for FCC Part 27	IN2393NU 001
RF test report for FCC Part 90	IN233SE0 001

5 Operational Description of the product

The S32G2 SOM based Gateway application unit is connected inside the Car. The Unit is powered on through the OBD connector by drawing the voltage of 12V, when the car is started. Once the unit is powered on, it receives the data from CAN and sends it to the Cloud through the 4G module.

6 TEST METHODOLOGY

6.1 Conducted Spurious Emission Test on AC Power Line

Measured levels of ac power-line conducted emission across the 50Ω LISN port (to which the EUT is connected). All emission voltage and current measurements shall be made on each current-carrying conductor at the plug end of the EUT power cord by the use of mating plugs and receptacles on the LISN, if used. Equipment shall be tested with power cords that are normally supplied or recommended by the manufacturer and that have electrical and shielding characteristics that are the same as those cords normally supplied or recommended by the manufacturer.

The device is placed on the test table, raised 80cm above the reference ground plane. The vertical conducting plane is located 40cm to the rear of the device. AC Conducted emission measurement is made over frequency range from 150kHz to 30MHz, this measurement was performed with EUT powered by an AC adaptor with 110V AC 60Hz supply.

6.1.1 Test Setup Configuration

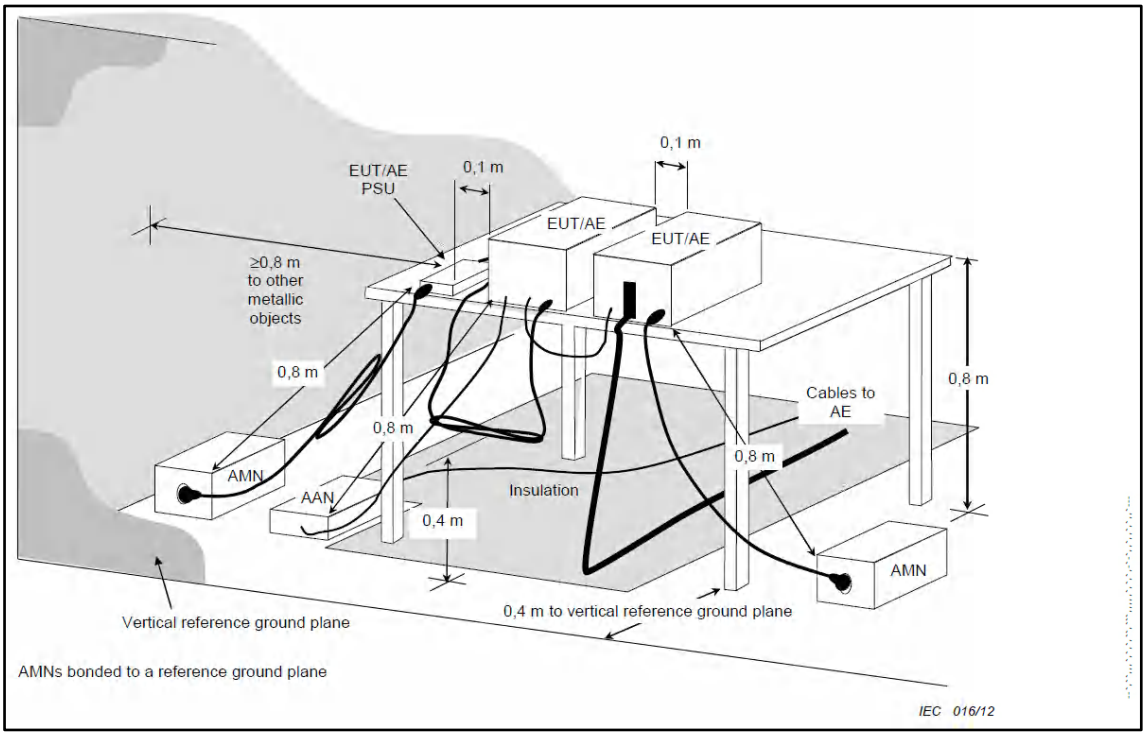

6.2 Radiated Emission Test

Frequency Range 9 kHz - 30 MHz

Test performed as per ANSI C63.4-2014 section 8.3

The loop Antenna was placed at 1m above the ground plane & EUT is 3 meters far from the measuring antenna. With 3m measurement distance, correction data were applied to the measured results. The test arrangement, measuring antenna guidelines and operational configurations in 8.2.1 and 8.2.2, shall be followed. The measurement antenna shall be positioned with its plane perpendicular to the ground at the Specified distance, when perpendicular to the ground plane, the lowest height of the magnetic antenna shall be 1 m above the ground and shall be positioned at the specified distance from the EUT. EUT & its associates are placed on non-conducting table of 0.8m height which is placed on the turn table, For each measurement antenna alignment, the EUT shall be rotated through 0° to 360° on a turntable. The report shall list worst case emission results, for each of the parallel & perpendicular orientations.

6.2.1 Test Setup Configuration

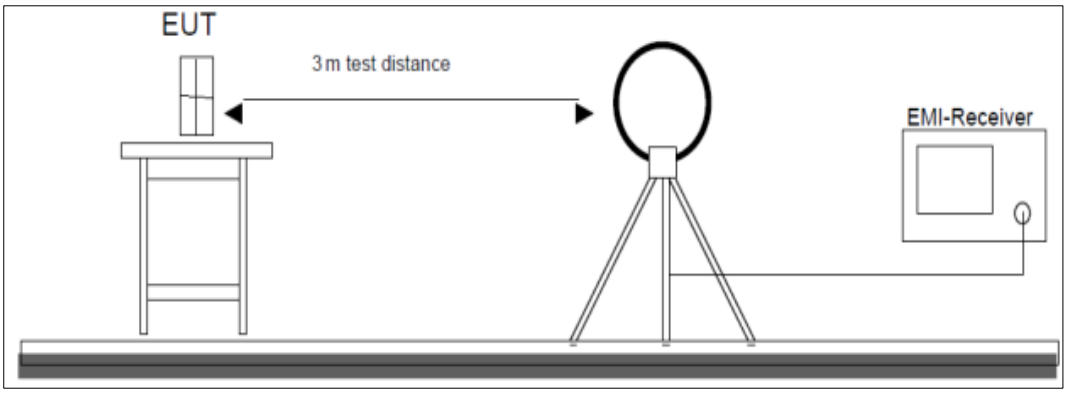

Figure 1: Frequency Range 9 kHz- 30 MHz

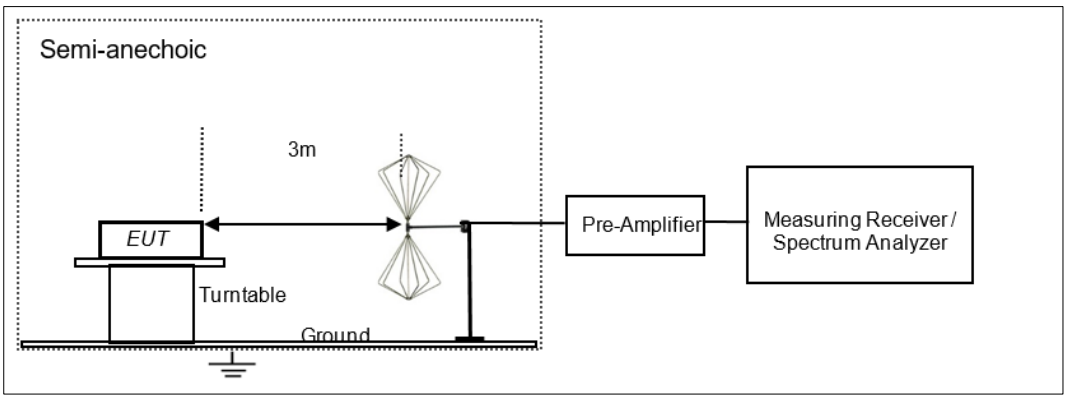

Figure 2: Frequency Range 30 MHz – 200 MHz

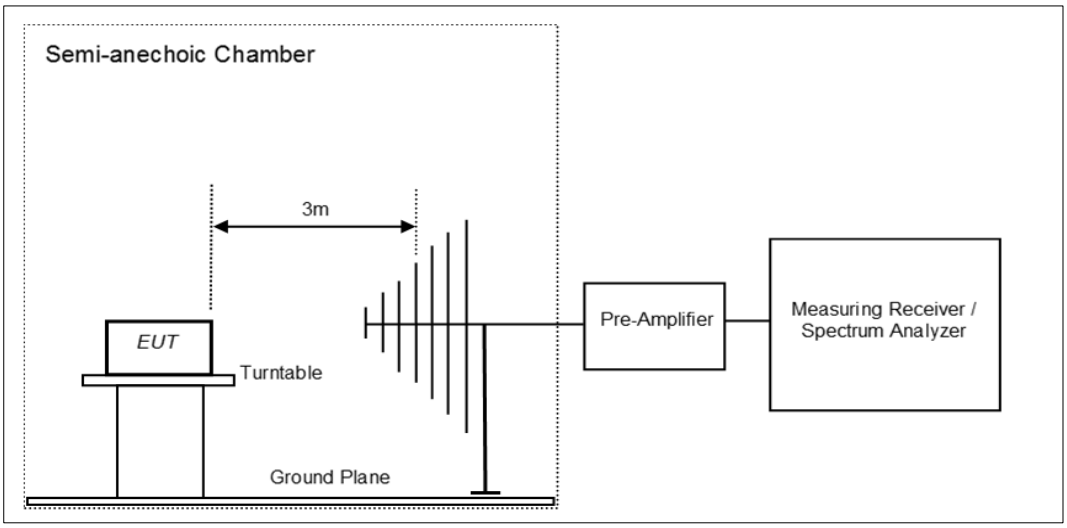

Figure 3: Frequency Range 200 MHz - 1GHz

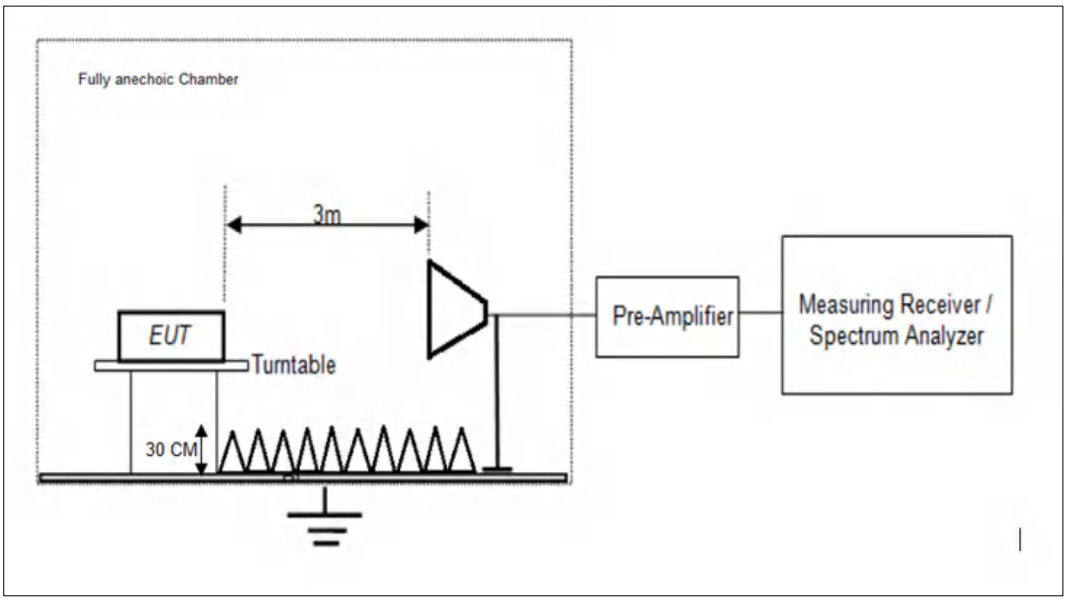

Figure 4: Frequency Range above 1 GHz

Frequency Range 30MHz to 10th harmonics of the highest fundamental frequency

Test performed as per ANSI C63.26-2015

Radiated spurious emission test are performed as below.

All the radiated emission measurements are performed in accordance with common requirement specified in 5.5.2 and Pre-test site path loss correction factors are used to adjust the EUT emission data in place of two step substitution method (as defined in Annex B of ANSI C63.26-2015).

The equipment under test is placed on non-conductive table at 3m away from the receive antenna in accordance with above mentioned standard. Turn table is rotated through 360 degree, and receiver antenna height is varied in order to determine the level of maximum emission. The maximum emission level and position of the maximized emission is recorded with use of spectrum analyzer.

Using pre-test site path loss to determine EUT emission power:

1) EUT emission powers are calculated using the following equation:

Emission Power = EUT_{Prec} [dBm EIRP/ ERP] + P_L [dB]

where

EUT_{Prec} = power of the emission measured at the test receiver during EUT measurements.

PL = path loss determined on the frequency of the EUT emission or calculated using linear interpolation between site characterization frequencies.

2) This is the level to be compared against the regulatory limit as it is the emission power referenced back to the EUT on the test site.

Test site-up for radiated measurements

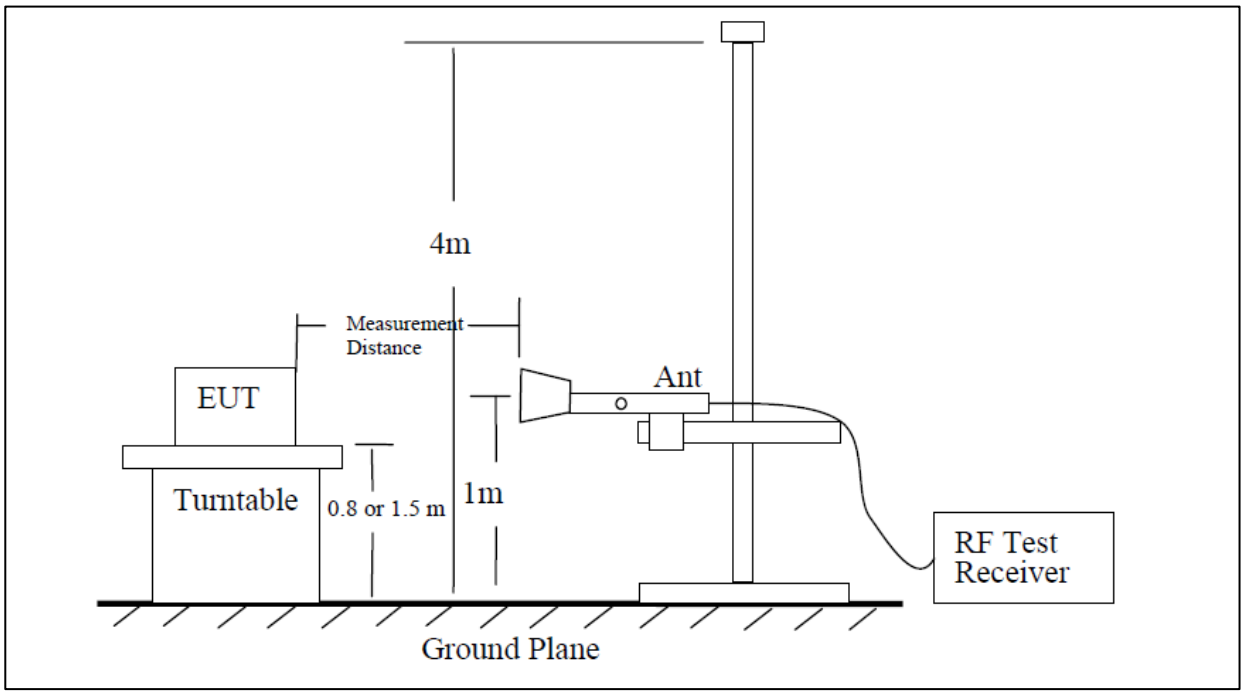

Substitution method set-up for radiated emission

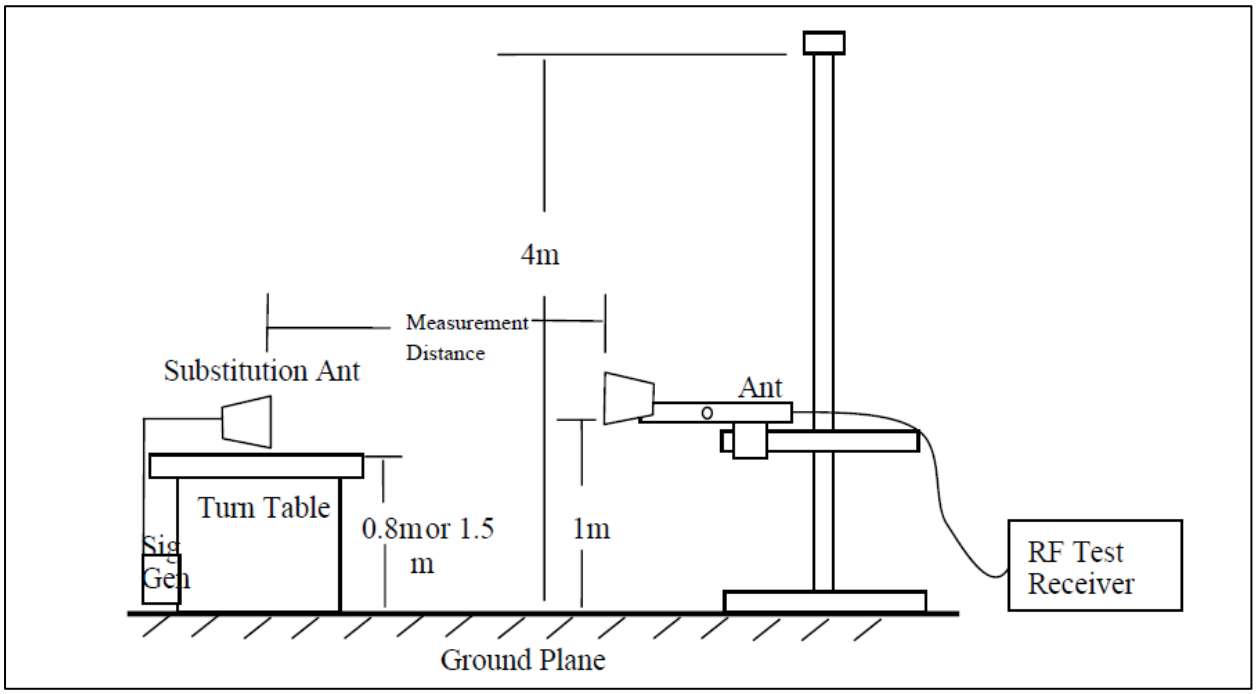

7 TEST RESULTS

7.1 PEAK – Average Ratio

Result ***Pass***

Specification	FCC Part §2.1046 & §24.232
Test Method / Procedure	ANSI C63.26-2015 As per subclause 5 in 971168 D01 Power Meas License Digital Systems v03r01
Detector Function	Peak/Average
Requirement	PAPR ≤ 13dBm

Test Setup:

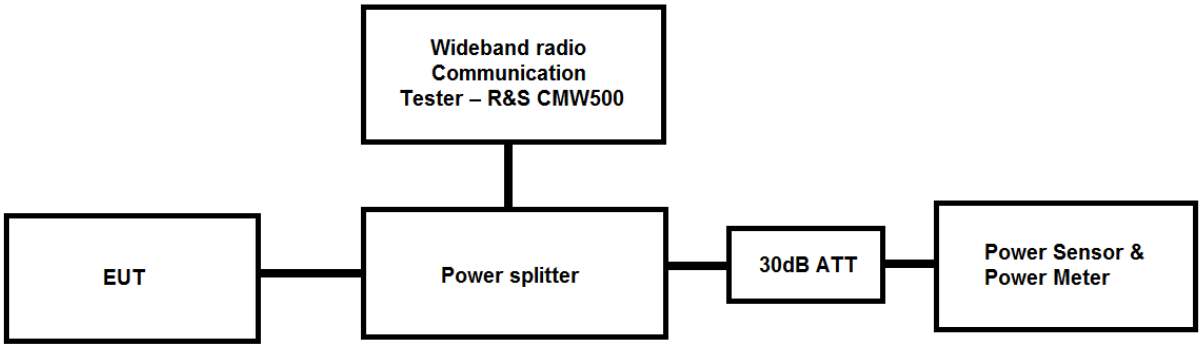

Environmental Conditions:

Temperature: +22.5°C **Voltage:** 12VDC through AC-DC Adapter **Relative Humidity:** 62%

KDB Guidelines applied:
Measurements were made as per section 5.2.4 in KDB 971168 D01 Power Meas License Digital Systems v03r01

Test results:

Note:

1 All the losses are included during measurement and final values are mentioned in the test report.

2. Total Average Output power (dBm) = Measured Average power (dBm) + Attenuator factor (30dB) + Power Splitter (6 dB) + Cable loss (1dB)

3. PAPR (dB) = Measured Peak Power(dBm) – Measured Average Power(dBm)

PAPR Test Results

Cellular Band	Channel Bandwidth (MHz)	Modulation Technique	Channel Number	RB Pos/RB allocation	PAPR (dB)	Limit (dBm)
Band2	1.4MHz	QPSK	18607	1RB#0	4.73	≤13
			18607	1RB#2	4.72	≤13
			18607	1RB#5	4.91	≤13
			18607	3RB#1	4.66	≤13
			18607	3RB#0	4.71	≤13
			18607	3RB#3	4.76	≤13
			18607	6RB#0	5.13	≤13
			18900	1RB#5	4.81	≤13
			18900	1RB#0	4.82	≤13
			18900	1RB#2	4.73	≤13
			18900	3RB#0	5.12	≤13
			18900	3RB#1	4.98	≤13
			18900	3RB#3	5.12	≤13
			18900	6RB#0	5.64	≤13
			19193	1RB#2	4.48	≤13
			19193	1RB#5	4.58	≤13
			19193	1RB#0	4.54	≤13
			19193	3RB#0	5.04	≤13
			19193	3RB#3	5.01	≤13
			19193	3RB#1	4.88	≤13
			19193	6RB#0	5.64	≤13
		16QAM	18607	1RB#2	5.08	≤13
			18607	1RB#5	5.19	≤13
			18607	1RB#0	5.16	≤13
			18607	3RB#0	5.16	≤13
			18607	3RB#1	5.07	≤13
			18607	3RB#0	5.12	≤13
			18607	3RB#1	5.06	≤13
			18607	3RB#3	5.28	≤13
			18607	6RB#0	6.11	≤13
			18900	1RB#5	5.76	≤13
			18900	1RB#0	5.75	≤13
			18900	1RB#2	5.72	≤13
			18900	3RB#3	5.73	≤13
			18900	3RB#1	5.64	≤13
			18900	3RB#0	5.71	≤13
			18900	6RB#0	6.13	≤13
			19193	1RB#2	5.43	≤13
			19193	1RB#5	5.54	≤13
			19193	1RB#0	5.59	≤13
			19193	3RB#3	5.75	≤13
			19193	3RB#1	5.64	≤13
			19193	3RB#0	5.72	≤13
			19193	6RB#0	5.83	≤13

Cellular Band	Channel Bandwidth (MHz)	Modulation Technique	Channel Number	RB Pos/ RB allocation	PAPR (dB)	Limit (dBm)
Band2	3MHz	QPSK	18615	1RB#14	4.91	≤13
			18615	1RB#0	4.79	≤13
			18615	1RB#8	4.72	≤13
			18615	8RB#7	4.80	≤13
			18615	8RB#4	4.73	≤13
			18615	8RB#0	4.71	≤13
			18615	15RB#0	5.34	≤13
			18900	1RB#14	4.80	≤13
			18900	1RB#8	4.66	≤13
			18900	1RB#0	4.86	≤13
			18900	8RB#7	5.26	≤13
			18900	8RB#0	5.21	≤13
			18900	8RB#4	5.14	≤13
			18900	15RB#0	5.83	≤13
			19185	1RB#14	4.77	≤13
			19185	1RB#8	4.65	≤13
			19185	1RB#0	4.78	≤13
			19185	8RB#4	5.08	≤13
			19185	8RB#0	5.10	≤13
			19185	8RB#7	5.15	≤13
			19185	15RB#0	5.73	≤13
		16QAM	18615	1RB#8	5.60	≤13
			18615	1RB#14	5.79	≤13
			18615	1RB#0	5.63	≤13
			18615	8RB#0	5.74	≤13
			18615	8RB#7	5.66	≤13
			18615	8RB#4	5.64	≤13
			18615	15RB#0	6.28	≤13
			18900	1RB#8	5.34	≤13
			18900	1RB#14	5.45	≤13
			18900	1RB#0	5.48	≤13
			18900	8RB#4	5.96	≤13
			18900	8RB#0	6.10	≤13
			18900	8RB#7	6.03	≤13
			18900	15RB#0	6.05	≤13
			19185	1RB#14	5.65	≤13
			19185	1RB#0	5.66	≤13
			19185	1RB#8	5.42	≤13
			19185	8RB#0	5.88	≤13
			19185	8RB#7	5.82	≤13
			19185	8RB#4	5.73	≤13
			19185	15RB#0	6.41	≤13

Cellular Band	Channel Bandwidth (MHz)	Modulation Technique	Channel Number	RB Pos/RB allocation	PAPR (dB)	Limit (dBm)
Band2	5MHz	QPSK	18625	1RB#24	4.73	≤13
			18625	1RB#12	4.54	≤13
			18625	1RB#0	4.51	≤13
			18625	12RB#6	4.86	≤13
			18625	12RB#0	4.93	≤13
			18625	12RB#13	5.02	≤13
			18625	25RB#0	5.48	≤13
			18900	1RB#24	4.82	≤13
			18900	1RB#0	4.87	≤13
			18900	1RB#12	4.75	≤13
			18900	12RB#6	5.09	≤13
			18900	12RB#0	5.20	≤13
			18900	12RB#13	5.15	≤13
			18900	25RB#0	5.64	≤13
			19175	1RB#0	4.84	≤13
			19175	1RB#12	4.67	≤13
			19175	1RB#24	4.58	≤13
			19175	12RB#0	5.22	≤13
			19175	12RB#6	5.07	≤13
			19175	12RB#13	5.08	≤13
			19175	25RB#0	5.45	≤13
		16QAM	18625	1RB#0	5.18	≤13
			18625	1RB#12	5.15	≤13
			18625	1RB#24	5.43	≤13
			18625	12RB#13	5.78	≤13
			18625	12RB#0	5.76	≤13
			18625	12RB#6	5.87	≤13
			18625	25RB#0	6.38	≤13
			18900	1RB#0	5.65	≤13
			18900	1RB#12	5.60	≤13
			18900	1RB#24	5.58	≤13
			18900	12RB#0	6.01	≤13
			18900	12RB#13	6.05	≤13
			18900	12RB#6	5.96	≤13
			18900	25RB#0	6.51	≤13
			19175	1RB#0	5.46	≤13
			19175	1RB#24	5.08	≤13
			19175	1RB#12	4.97	≤13
			19175	12RB#0	5.88	≤13
			19175	12RB#6	5.80	≤13
			19175	12RB#13	5.78	≤13
			19175	25RB#0	6.51	≤13

Cellular Band	Channel Bandwidth (MHz)	Modulation Technique	Channel Number	RB Pos/RB allocation	PAPR (dB)	Limit (dBm)
Band2	10MHz	QPSK	18650	1RB#0	4.69	≤13
			18650	1RB#24	4.72	≤13
			18650	1RB#49	5.01	≤13
			18650	25RB#12	4.90	≤13
			18650	25RB#0	5.01	≤13
			18650	25RB#25	5.25	≤13
			18650	50RB#0	5.13	≤13
			18900	1RB#49	4.80	≤13
			18900	1RB#0	4.85	≤13
			18900	1RB#24	4.78	≤13
			18900	25RB#0	5.26	≤13
			18900	25RB#12	5.14	≤13
			18900	25RB#25	5.15	≤13
			18900	50RB#0	5.13	≤13
			19150	1RB#24	4.80	≤13
			19150	1RB#49	5.03	≤13
			19150	1RB#0	4.95	≤13
			19150	25RB#0	5.48	≤13
			19150	25RB#25	5.05	≤13
			19150	25RB#12	5.15	≤13
			19150	50RB#0	5.77	≤13
		16QAM	18650	1RB#24	5.29	≤13
			18650	1RB#49	5.43	≤13
			18650	1RB#0	5.12	≤13
			18650	25RB#0	5.73	≤13
			18650	25RB#12	5.82	≤13
			18650	25RB#25	5.98	≤13
			18650	50RB#0	6.15	≤13
			18900	1RB#49	5.76	≤13
			18900	1RB#0	5.81	≤13
			18900	1RB#24	5.82	≤13
			18900	25RB#25	5.98	≤13
			18900	25RB#12	5.90	≤13
			18900	25RB#0	6.08	≤13
			18900	50RB#0	6.31	≤13
			19150	1RB#24	5.86	≤13
			19150	1RB#49	5.75	≤13
			19150	1RB#0	6.06	≤13
			19150	25RB#25	6.09	≤13
			19150	25RB#12	6.13	≤13
			19150	25RB#0	6.28	≤13
			19150	50RB#0	7.00	≤13

Cellular Band	Channel Bandwidth (MHz)	Modulation Technique	Channel Number	RB Pos/RB allocation	PAPR (dB)	Limit (dBm)
Band2	15MHz	QPSK	18675	1RB#74	4.89	≤13
			18675	1RB#0	4.82	≤13
			18675	1RB#38	4.70	≤13
			18675	36RB#39	5.26	≤13
			18675	36RB#18	5.10	≤13
			18675	36RB#0	4.96	≤13
			18675	75RB#0	5.49	≤13
			18900	1RB#74	4.83	≤13
			18900	1RB#38	4.67	≤13
			18900	1RB#0	5.23	≤13
			18900	36RB#0	5.22	≤13
			18900	36RB#39	5.28	≤13
			18900	36RB#18	5.15	≤13
			18900	75RB#0	5.56	≤13
			19125	1RB#74	4.70	≤13
			19125	1RB#38	4.82	≤13
			19125	1RB#0	4.82	≤13
			19125	36RB#18	5.25	≤13
			19125	36RB#0	5.42	≤13
			19125	36RB#39	5.10	≤13
			19125	75RB#0	5.74	≤13
		16QAM	18675	1RB#0	5.09	≤13
			18675	1RB#74	5.39	≤13
			18675	1RB#38	5.33	≤13
			18675	36RB#0	5.76	≤13
			18675	36RB#39	6.25	≤13
			18675	36RB#18	6.20	≤13
			18675	75RB#0	6.61	≤13
			18900	1RB#38	5.76	≤13
			18900	1RB#74	5.87	≤13
			18900	1RB#0	6.06	≤13
			18900	36RB#18	6.09	≤13
			18900	36RB#0	6.13	≤13
			18900	36RB#39	6.09	≤13
			18900	75RB#0	6.57	≤13
			19125	1RB#74	5.30	≤13
			19125	1RB#0	5.44	≤13
			19125	1RB#38	5.36	≤13
			19125	36RB#0	6.22	≤13
			19125	36RB#39	6.13	≤13
			19125	36RB#18	6.11	≤13
			19125	75RB#0	6.68	≤13

Cellular Band	Channel Bandwidth (MHz)	Modulation Technique	Channel Number	RB Pos/RB allocation	PAPR (dB)	Limit (dBm)
Band2	20MHz	QPSK	18700	1RB#99	4.78	≤13
			18700	1RB#49	4.94	≤13
			18700	1RB#0	4.86	≤13
			18700	50RB#25	5.24	≤13
			18700	50RB#0	5.17	≤13
			18700	50RB#50	5.50	≤13
			18700	100RB#0	5.77	≤13
			18900	1RB#99	4.82	≤13
			18900	1RB#0	4.92	≤13
			18900	1RB#49	4.78	≤13
			18900	50RB#25	5.19	≤13
			18900	50RB#0	5.41	≤13
			18900	50RB#50	5.24	≤13
			18900	100RB#0	5.33	≤13
			19100	1RB#0	4.89	≤13
			19100	1RB#49	4.91	≤13
			19100	1RB#99	4.77	≤13
			19100	50RB#0	5.25	≤13
			19100	50RB#25	5.43	≤13
			19100	50RB#50	5.34	≤13
			19100	100RB#0	5.76	≤13
		16QAM	18700	1RB#0	5.21	≤13
			18700	1RB#49	5.35	≤13
			18700	1RB#99	5.49	≤13
			18700	50RB#50	6.23	≤13
			18700	50RB#0	6.15	≤13
			18700	50RB#25	6.20	≤13
			18700	100RB#0	6.36	≤13
			18900	1RB#0	5.06	≤13
			18900	1RB#49	5.17	≤13
			18900	1RB#99	5.33	≤13
			18900	50RB#0	6.16	≤13
			18900	50RB#50	6.07	≤13
			18900	50RB#25	6.01	≤13
			18900	100RB#0	6.50	≤13
			19100	1RB#0	5.31	≤13
			19100	1RB#99	5.18	≤13
			19100	1RB#49	5.39	≤13
			19100	50RB#0	6.28	≤13
			19100	50RB#25	6.19	≤13
			19100	50RB#50	6.23	≤13
			19100	100RB#0	6.85	≤13

Cellular Band	Channel Bandwidth (MHz)	Modulation Technique	Channel Number	RB Pos/RB allocation	PAPR (dB)	Limit (dBm)
Band25	1.4MHz	QPSK	26047	1RB#0	4.51	≤13
			26047	1RB#2	4.47	≤13
			26047	1RB#5	4.54	≤13
			26047	3RB#1	4.80	≤13
			26047	3RB#0	4.82	≤13
			26047	3RB#3	4.82	≤13
			26047	6RB#0	5.29	≤13
			26365	1RB#5	4.47	≤13
			26365	1RB#0	4.42	≤13
			26365	1RB#2	4.36	≤13
			26365	3RB#0	4.61	≤13
			26365	3RB#1	4.62	≤13
			26365	3RB#3	4.65	≤13
			26365	6RB#0	5.12	≤13
			26683	1RB#2	4.41	≤13
			26683	1RB#5	4.48	≤13
			26683	1RB#0	4.43	≤13
			26683	3RB#0	4.81	≤13
			26683	3RB#3	4.88	≤13
			26683	3RB#1	4.83	≤13
			26683	6RB#0	5.26	≤13
	1.4MHz	16QAM	26047	1RB#2	5.61	≤13
			26047	1RB#5	5.65	≤13
			26047	1RB#0	5.63	≤13
			26047	3RB#0	5.87	≤13
			26047	3RB#1	5.89	≤13
			26047	3RB#3	5.91	≤13
			26047	6RB#0	6.11	≤13
			26365	1RB#5	5.84	≤13
			26365	1RB#0	4.90	≤13
			26365	1RB#2	4.82	≤13
			26365	3RB#3	5.07	≤13
			26365	3RB#1	5.11	≤13
			26365	3RB#0	5.12	≤13
			26365	6RB#0	5.49	≤13
			26683	1RB#2	5.27	≤13
			26683	1RB#5	5.37	≤13
			26683	1RB#0	5.37	≤13
			26683	3RB#3	6.07	≤13
			26683	3RB#1	6.99	≤13
			26683	3RB#0	6.09	≤13
			26683	6RB#0	6.18	≤13

Band	Channel Bandwidth (MHz)	Modulation Technique	Channel No	RB Pos/RB allocation	PAPR (dB)	Limit (dBm)
Band25	3MHz	QPSK	26055	1RB#14	5.01	≤13
			26055	1RB#0	4.94	≤13
			26055	1RB#8	4.84	≤13
			26055	8RB#7	5.06	≤13
			26055	8RB#4	5.02	≤13
			26055	8RB#0	4.94	≤13
			26055	15RB#0	5.52	≤13
			26365	1RB#14	5.02	≤13
			26365	1RB#8	4.85	≤13
			26365	1RB#0	4.93	≤13
			26365	8RB#7	4.94	≤13
			26365	8RB#0	4.95	≤13
			26365	8RB#4	4.97	≤13
			26365	15RB#0	5.51	≤13
			26675	1RB#14	4.98	≤13
			26675	1RB#8	4.87	≤13
			26675	1RB#0	4.95	≤13
			26675	8RB#4	5.25	≤13
			26675	8RB#0	5.22	≤13
			26675	8RB#7	5.20	≤13
			26675	15RB#0	5.54	≤13
	3MHz	16QAM	26055	1RB#8	5.06	≤13
			26055	1RB#14	5.20	≤13
			26055	1RB#0	5.11	≤13
			26055	8RB#0	5.86	≤13
			26055	8RB#7	5.88	≤13
			26055	8RB#4	5.86	≤13
			26055	15RB#0	6.15	≤13
			26365	1RB#8	5.15	≤13
			26365	1RB#14	5.31	≤13
			26365	1RB#0	5.31	≤13
			26365	8RB#4	5.93	≤13
			26365	8RB#0	5.92	≤13
			26365	8RB#7	5.91	≤13
			26365	15RB#0	6.20	≤13
			26675	1RB#14	5.31	≤13
			26675	1RB#0	5.29	≤13
			26675	1RB#8	5.16	≤13
			26675	8RB#0	5.89	≤13
			26675	8RB#7	5.92	≤13
			26675	8RB#4	5.77	≤13
			26675	15RB#0	6.22	≤13

Band	Channel Bandwidth (MHz)	Modulation Technique	Channel No	RB Pos/RB allocation	PAPR (dB)	Limit (dBm)
Band25	5MHz	QPSK	26065	1RB#24	4.91	≤13
			26065	1RB#12	4.82	≤13
			26065	1RB#0	4.86	≤13
			26065	12RB#6	5.27	≤13
			26065	12RB#0	5.17	≤13
			26065	12RB#13	5.28	≤13
			26065	25RB#0	5.86	≤13
			26365	1RB#24	2.91	≤13
			26365	1RB#0	4.85	≤13
			26365	1RB#12	4.81	≤13
			26365	12RB#6	5.24	≤13
			26365	12RB#0	5.18	≤13
			26365	12RB#13	5.27	≤13
			26365	25RB#0	5.84	≤13
			26665	1RB#0	4.89	≤13
			26665	1RB#12	4.84	≤13
			26665	1RB#24	4.96	≤13
			26665	12RB#0	5.18	≤13
			26665	12RB#6	5.14	≤13
			26665	12RB#13	5.17	≤13
			26665	25RB#0	5.60	≤13
	5MHz	16QAM	26065	1RB#0	5.71	≤13
			26065	1RB#12	5.60	≤13
			26065	1RB#24	5.71	≤13
			26065	12RB#13	6.00	≤13
			26065	12RB#0	5.89	≤13
			26065	12RB#6	5.87	≤13
			26065	25RB#0	6.31	≤13
			26365	1RB#0	5.60	≤13
			26365	1RB#12	5.42	≤13
			26365	1RB#24	5.52	≤13
			26365	12RB#0	6.09	≤13
			26365	12RB#13	5.06	≤13
			26365	12RB#6	6.01	≤13
			26365	25RB#0	6.53	≤13
			26665	1RB#0	5.79	≤13
			26665	1RB#24	5.88	≤13
			26665	1RB#12	5.73	≤13
			26665	12RB#0	6.03	≤13
			26665	12RB#6	6.07	≤13
			26665	12RB#13	6.09	≤13
			26665	25RB#0	6.61	≤13

Band	Channel Bandwidth (MHz)	Modulation Technique	Channel No	RB Pos/RB allocation	PAPR (dB)	Limit (dBm)
Band25	10MHz	QPSK	26090	1RB#0	4.95	≤13
			26090	1RB#24	4.90	≤13
			26090	1RB#49	4.98	≤13
			26090	25RB#12	5.25	≤13
			26090	25RB#0	5.06	≤13
			26090	25RB#25	5.12	≤13
			26090	50RB#0	5.58	≤13
			26365	1RB#49	4.94	≤13
			26365	1RB#0	4.83	≤13
			26365	1RB#24	4.65	≤13
			26365	25RB#0	5.13	≤13
			26365	25RB#12	5.20	≤13
			26365	25RB#25	5.37	≤13
			26365	50RB#0	6.41	≤13
			26640	1RB#24	4.79	≤13
			26640	1RB#49	4.98	≤13
			26640	1RB#0	4.77	≤13
			26640	25RB#0	5.45	≤13
			26640	25RB#25	5.37	≤13
			26640	25RB#12	5.35	≤13
			26640	50RB#0	5.11	≤13
	10MHz	16QAM	26090	1RB#24	5.60	≤13
			26090	1RB#49	5.80	≤13
			26090	1RB#0	5.61	≤13
			26090	25RB#0	5.67	≤13
			26090	25RB#12	6.12	≤13
			26090	25RB#25	5.98	≤13
			26090	50RB#0	6.34	≤13
			26365	1RB#49	5.26	≤13
			26365	1RB#0	5.30	≤13
			26365	1RB#24	5.22	≤13
			26365	25RB#25	6.01	≤13
			26365	25RB#12	6.13	≤13
			26365	25RB#0	6.07	≤13
			26365	50RB#0	6.89	≤13
			26640	1RB#24	5.12	≤13
			26640	1RB#49	5.37	≤13
			26640	1RB#0	5.40	≤13
			26640	25RB#25	6.06	≤13
			26640	25RB#12	6.07	≤13
			26640	25RB#0	6.06	≤13
			26640	50RB#0	6.10	≤13

Band	Channel Bandwidth (MHz)	Modulation Technique	Channel No	RB Pos/RB allocation	PAPR (dB)	Limit (dBm)
Band25	15MHz	QPSK	26115	1RB#74	4.99	≤13
			26115	1RB#0	4.71	≤13
			26115	1RB#38	4.67	≤13
			26115	36RB#39	5.20	≤13
			26115	36RB#18	5.27	≤13
			26115	36RB#0	5.05	≤13
			26115	75RB#0	5.73	≤13
			26365	1RB#74	4.90	≤13
			26365	1RB#38	4.85	≤13
			26365	1RB#0	4.96	≤13
			26365	36RB#0	5.14	≤13
			26365	36RB#39	5.18	≤13
			26365	36RB#18	5.14	≤13
			26365	75RB#0	5.65	≤13
			26615	1RB#74	4.96	≤13
			26615	1RB#38	4.83	≤13
			26615	1RB#0	4.95	≤13
			26615	36RB#18	5.32	≤13
			26615	36RB#0	5.16	≤13
			26615	36RB#39	5.31	≤13
			26615	75RB#0	5.64	≤13
	15MHz	16QAM	26115	1RB#0	5.29	≤13
			26115	1RB#74	5.39	≤13
			26115	1RB#38	5.24	≤13
			26115	36RB#0	6.01	≤13
			26115	36RB#39	6.17	≤13
			26115	36RB#18	6.20	≤13
			26115	75RB#0	6.54	≤13
			26365	1RB#38	5.25	≤13
			26365	1RB#74	5.22	≤13
			26365	1RB#0	5.41	≤13
			26365	36RB#18	6.09	≤13
			26365	36RB#0	6.17	≤13
			26365	36RB#39	6.15	≤13
			26365	75RB#0	6.57	≤13
			26615	1RB#74	5.42	≤13
			26615	1RB#0	5.42	≤13
			26615	1RB#38	5.16	≤13
			26615	36RB#0	6.27	≤13
			26615	36RB#39	6.12	≤13
			26615	36RB#18	6.04	≤13
			26615	75RB#0	6.56	≤13

Band	Channel Bandwidth (MHz)	Modulation Technique	Channel No	RB Pos/RB allocation	PAPR (dB)	Limit (dBm)
Band25	20MHz	QPSK	26140	1RB#99	4.91	≤13
			26140	1RB#49	4.99	≤13
			26140	1RB#0	4.99	≤13
			26140	50RB#25	5.40	≤13
			26140	50RB#0	5.21	≤13
			26140	50RB#50	5.49	≤13
			26140	100RB#0	5.58	≤13
			26365	1RB#99	4.85	≤13
			26365	1RB#0	4.82	≤13
			26365	1RB#49	4.73	≤13
			26365	50RB#25	5.32	≤13
			26365	50RB#0	5.24	≤13
			26365	50RB#50	5.37	≤13
			26365	100RB#0	5.99	≤13
			26590	1RB#0	5.02	≤13
			26590	1RB#49	4.80	≤13
			26590	1RB#99	4.97	≤13
			26590	50RB#0	5.41	≤13
			26590	50RB#25	5.36	≤13
			26590	50RB#50	5.35	≤13
			26590	100RB#0	5.99	≤13
	20MHz	16QAM	26140	1RB#0	5.22	≤13
			26140	1RB#49	5.22	≤13
			26140	1RB#99	5.27	≤13
			26140	50RB#50	6.28	≤13
			26140	50RB#0	6.19	≤13
			26140	50RB#25	5.60	≤13
			26140	100RB#0	6.44	≤13
			26365	1RB#0	5.50	≤13
			26365	1RB#49	5.31	≤13
			26365	1RB#99	5.55	≤13
			26365	50RB#0	6.25	≤13
			26365	50RB#50	6.20	≤13
			26365	50RB#25	6.20	≤13
			26365	100RB#0	6.31	≤13
			26590	1RB#0	5.67	≤13
			26590	1RB#99	5.43	≤13
			26590	1RB#49	6.50	≤13
			26590	50RB#0	6.36	≤13
			26590	50RB#25	6.25	≤13
			26590	50RB#50	6.19	≤13
			26590	100RB#0	6.73	≤13

Test Results for WCDMA:

Band	Channel Number	Channel frequency (MHz)	Measured PAPR (dB)	Limit (dBm)	Margin (dBm)
2	9262	1852.40	3.89	≤13	-9.11
	9400	1880.00	3.50	≤13	-9.50
	9538	1907.60	3.87	≤13	-9.13

7.2 EFFECTIVE (ISOTROPIC) RADIATED POWER

Result ***Pass***

Specification	FCC Part §2.1046 & §24.232
Test Method / Procedure	ANSI C63.26-2015 As per subclause 5 in 971168 D01 Power Meas License Digital Systems v03r01
Detector Function	Average
Requirement	The EIRP of mobile transmitters and auxiliary test transmitters must not exceed 2 watts

Test Setup:

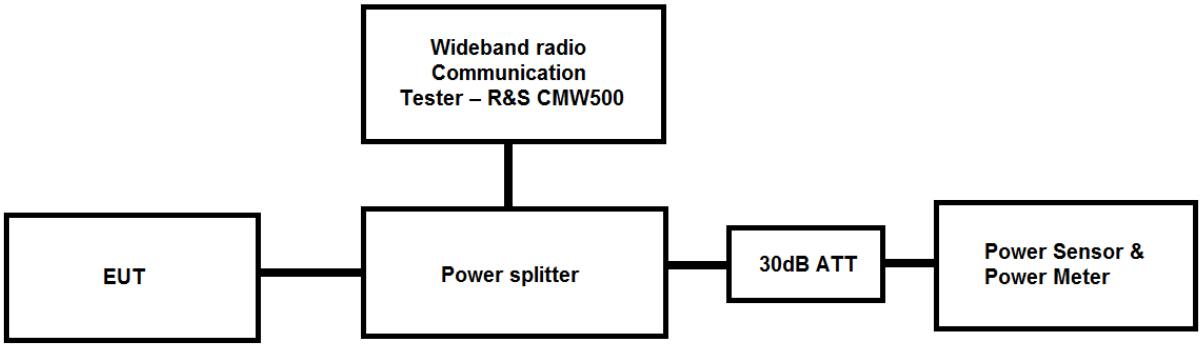

Environmental Conditions:

Temperature: +22.5°C **Voltage:** 12VDC through AC-DC Adapter **Relative Humidity:** 62%

KDB Guidelines applied:
Measurements were made as per section 5.2.4 in KDB 971168 D01 Power Meas License Digital Systems v03r01

Test Results:

Note:

1. All the losses are included during measurement and final values are mentioned in the test report.
2. Total Average Output power (dBm) = Measured Average power (dBm) + Attenuator factor (30dB) + Power Splitter (3.3 dB) + Cable loss (1dB)
3. For getting the EIRP(Equivalent Isotropic Radiated Power), the following formula should be taken to calculate it,

ERP (dBm) = Conducted power (dBm) + Antenna gain (dBd)

EIRP (dBm) = Conducted power (dBm) + Antenna gain (dBi)

Cellular Band	Cell Bandwidth	Modulation technique	Channel Number	RBpos/RB allocation	Measured Average Power(dBm)	EIRP (dBm)	limit (dBm)
Band2	1.4MHz	QPSK	18607	1RB#0	22.8	25.80	33.00
			18607	1RB#2	22.86	25.86	33.00
			18607	1RB#5	22.7	25.70	33.00
			18607	3RB#1	23.81	26.81	33.00
			18607	3RB#0	23.71	26.71	33.00
			18607	3RB#3	23.72	26.72	33.00
			18607	6RB#0	23.77	26.77	33.00
			18900	1RB#5	22.82	25.82	33.00
			18900	1RB#0	22.78	25.78	33.00
			18900	1RB#2	22.84	25.84	33.00
			18900	3RB#0	23.63	26.63	33.00
			18900	3RB#1	23.68	26.68	33.00
			18900	3RB#3	23.68	26.68	33.00
			18900	6RB#0	23.66	26.66	33.00
			19193	1RB#2	22.54	25.54	33.00
			19193	1RB#5	22.34	25.34	33.00
			19193	1RB#0	22.73	25.73	33.00
			19193	3RB#0	23.34	26.34	33.00
			19193	3RB#3	23.21	26.21	33.00
			19193	3RB#1	23.33	26.33	33.00
			19193	6RB#0	23.28	26.28	33.00
		16QAM	18607	1RB#2	23.25	26.25	33.00
			18607	1RB#5	23.16	26.16	33.00
			18607	1RB#0	23.18	26.18	33.00
			18607	3RB#0	23.96	26.96	33.00
			18607	3RB#1	23.97	26.97	33.00
			18607	3RB#0	23.96	26.96	33.00
			18607	3RB#1	23.97	26.97	33.00
			18607	3RB#3	24.00	27.00	33.00
			18607	6RB#0	23.01	26.01	33.00
			18900	1RB#5	22.84	25.84	33.00
			18900	1RB#0	22.77	25.77	33.00
			18900	1RB#2	22.81	25.81	33.00
			18900	3RB#3	23.95	26.95	33.00
			18900	3RB#1	24.00	27.00	33.00
			18900	3RB#0	23.94	26.94	33.00
			18900	6RB#0	23.47	26.47	33.00
			19193	1RB#2	23.55	26.55	33.00
			19193	1RB#5	23.34	26.34	33.00
			19193	1RB#0	22.76	25.76	33.00
			19193	3RB#3	23.34	26.34	33.00
			19193	3RB#1	23.46	26.46	33.00
			19193	3RB#0	23.48	26.48	33.00
			19193	6RB#0	23.59	26.59	33.00

Cellular Band	Cell Bandwidth	Modulation technique	Channel Number	RBpos/RB allocation	Measured Average Power(dBm)	EIRP (dBm)	limit (dBm)
Band2	3MHz	QPSK	18615	1RB#14	22.74	25.74	33.00
			18615	1RB#0	22.79	25.79	33.00
			18615	1RB#8	22.78	25.78	33.00
			18615	8RB#7	24.22	27.22	33.00
			18615	8RB#4	24.29	27.29	33.00
			18615	8RB#0	24.32	27.32	33.00
			18615	15RB#0	23.73	26.73	33.00
			18900	1RB#14	23.00	26.00	33.00
			18900	1RB#8	22.94	25.94	33.00
			18900	1RB#0	22.89	25.89	33.00
			18900	8RB#7	23.74	26.74	33.00
			18900	8RB#0	23.68	26.68	33.00
			18900	8RB#4	23.73	26.73	33.00
			18900	15RB#0	23.69	26.69	33.00
			19185	1RB#14	22.33	25.33	33.00
			19185	1RB#8	22.8	25.80	33.00
			19185	1RB#0	22.96	25.96	33.00
			19185	8RB#4	23.64	26.64	33.00
			19185	8RB#0	23.74	26.74	33.00
			19185	8RB#7	23.37	26.37	33.00
			19185	15RB#0	23.62	26.62	33.00
		16QAM	18615	1RB#8	22.73	25.73	33.00
			18615	1RB#14	22.69	25.69	33.00
			18615	1RB#0	22.73	25.73	33.00
			18615	8RB#0	23.38	26.38	33.00
			18615	8RB#7	23.49	26.49	33.00
			18615	8RB#4	23.38	26.38	33.00
			18615	15RB#0	23.29	26.29	33.00
			18900	1RB#8	23.22	26.22	33.00
			18900	1RB#14	23.26	26.26	33.00
			18900	1RB#0	23.17	26.17	33.00
			18900	8RB#4	23.43	26.43	33.00
			18900	8RB#0	23.47	26.47	33.00
			18900	8RB#7	23.23	26.23	33.00
			18900	15RB#0	23.35	26.35	33.00
			19185	1RB#14	23.27	26.27	33.00
			19185	1RB#0	22.96	25.96	33.00
			19185	1RB#8	23.7	26.70	33.00
			19185	8RB#0	23.57	26.57	33.00
			19185	8RB#7	23.23	26.23	33.00
			19185	8RB#4	23.3	26.30	33.00
			19185	15RB#0	23.31	26.31	33.00

Cellular Band	Cell Bandwidth	Modulation technique	Channel Number	RBpos/RB allocation	Measured Average Power(dBm)	EIRP (dBm)	limit (dBm)
Band2	5MHz	QPSK	18625	1RB#24	22.56	25.56	33.00
			18625	1RB#12	22.55	25.55	33.00
			18625	1RB#0	22.46	25.46	33.00
			18625	12RB#6	22.64	25.64	33.00
			18625	12RB#0	22.55	25.55	33.00
			18625	12RB#13	22.6	25.60	33.00
			18625	25RB#0	22.6	25.60	33.00
			18900	1RB#24	22.56	25.56	33.00
			18900	1RB#0	22.51	25.51	33.00
			18900	1RB#12	22.47	25.47	33.00
			18900	12RB#6	22.69	25.69	33.00
			18900	12RB#0	22.6	25.60	33.00
			18900	12RB#13	22.57	25.57	33.00
			18900	25RB#0	22.52	25.52	33.00
			19175	1RB#0	22.56	25.56	33.00
			19175	1RB#12	22.55	25.55	33.00
			19175	1RB#24	22.98	25.98	33.00
			19175	12RB#0	22.9	25.90	33.00
			19175	12RB#6	22.93	25.93	33.00
			19175	12RB#13	22.76	25.76	33.00
			19175	25RB#0	22.83	25.83	33.00
		16QAM	18625	1RB#0	22.36	25.36	33.00
			18625	1RB#12	22.23	25.23	33.00
			18625	1RB#24	22.16	25.16	33.00
			18625	12RB#13	21.78	24.78	33.00
			18625	12RB#0	21.74	24.74	33.00
			18625	12RB#6	21.58	24.58	33.00
			18625	25RB#0	21.63	24.63	33.00
			18900	1RB#0	22.24	25.24	33.00
			18900	1RB#12	22.52	25.52	33.00
			18900	1RB#24	22.38	25.38	33.00
			18900	12RB#0	21.82	24.82	33.00
			18900	12RB#13	21.79	24.79	33.00
			18900	12RB#6	21.8	24.80	33.00
			18900	25RB#0	21.81	24.81	33.00
			19175	1RB#0	22.51	25.51	33.00
			19175	1RB#24	22.19	25.19	33.00
			19175	1RB#12	22.33	25.33	33.00
			19175	12RB#0	21.69	24.69	33.00
			19175	12RB#6	21.95	24.95	33.00
			19175	12RB#13	21.8	24.80	33.00
			19175	25RB#0	21.8	24.80	33.00

Cellular Band	Cell Bandwidth	Modulation technique	Channel Number	RBpos/RB allocation	Measured Average Power(dBm)	EIRP (dBm)	limit (dBm)
Band2	10MHz	QPSK	18650	1RB#0	23.11	26.11	33.00
			18650	1RB#24	24	27.00	33.00
			18650	1RB#49	23.55	26.55	33.00
			18650	25RB#12	24.25	27.25	33.00
			18650	25RB#0	24.14	27.14	33.00
			18650	25RB#25	23.96	26.96	33.00
			18650	50RB#0	24.16	27.16	33.00
			18900	1RB#49	22.4	25.40	33.00
			18900	1RB#0	22.97	25.97	33.00
			18900	1RB#24	23.88	26.88	33.00
			18900	25RB#0	24.16	27.16	33.00
			18900	25RB#12	23.79	26.79	33.00
			18900	25RB#25	23.69	26.69	33.00
			18900	50RB#0	24.12	27.12	33.00
			19150	1RB#24	23.96	26.96	33.00
			19150	1RB#49	22.49	25.49	33.00
			19150	1RB#0	22.71	25.71	33.00
			19150	25RB#0	23.49	26.49	33.00
			19150	25RB#25	23.79	26.79	33.00
			19150	25RB#12	23.94	26.94	33.00
			19150	50RB#0	23.65	26.65	33.00
		16QAM	18650	1RB#24	23.42	26.42	33.00
			18650	1RB#49	23.73	26.73	33.00
			18650	1RB#0	23.53	26.53	33.00
			18650	25RB#0	23.39	26.39	33.00
			18650	25RB#12	23.5	26.50	33.00
			18650	25RB#25	23.4	26.40	33.00
			18650	50RB#0	23.24	26.24	33.00
			18900	1RB#49	23.23	26.23	33.00
			18900	1RB#0	22.98	25.98	33.00
			18900	1RB#24	22.9	25.90	33.00
			18900	25RB#25	23.55	26.55	33.00
			18900	25RB#12	23.56	26.56	33.00
			18900	25RB#0	23.29	26.29	33.00
			18900	50RB#0	23.31	26.31	33.00
			19150	1RB#24	22.96	25.96	33.00
			19150	1RB#49	22.6	25.60	33.00
			19150	1RB#0	22.68	25.68	33.00
			19150	25RB#25	23.53	26.53	33.00
			19150	25RB#12	23.69	26.69	33.00
			19150	25RB#0	23.43	26.43	33.00
			19150	50RB#0	23.42	26.42	33.00

Cellular Band	Cell Bandwidth	Modulation technique	Channel Number	RBpos/RB allocation	Measured Average Power(dBm)	EIRP (dBm)	limit (dBm)
Band2	15MHz	QPSK	18675	1RB#74	23.77	26.77	33.00
			18675	1RB#0	22.72	25.72	33.00
			18675	1RB#38	24.14	27.14	33.00
			18675	36RB#39	24.08	27.08	33.00
			18675	36RB#18	24.12	27.12	33.00
			18675	36RB#0	24.19	27.19	33.00
			18675	75RB#0	24.17	27.17	33.00
			18900	1RB#74	23.26	26.26	33.00
			18900	1RB#38	23.75	26.75	33.00
			18900	1RB#0	23.05	26.05	33.00
			18900	36RB#0	23.6	26.60	33.00
			18900	36RB#39	23.68	26.68	33.00
			18900	36RB#18	23.78	26.78	33.00
			18900	75RB#0	24.12	27.12	33.00
			19125	1RB#74	22.62	25.62	33.00
			19125	1RB#38	23.7	26.70	33.00
			19125	1RB#0	22.46	25.46	33.00
			19125	36RB#18	23.69	26.69	33.00
			19125	36RB#0	23.16	26.16	33.00
			19125	36RB#39	23.65	26.65	33.00
			19125	75RB#0	24.26	27.26	33.00
		16QAM	18675	1RB#0	23.44	26.44	33.00
			18675	1RB#74	23.29	26.29	33.00
			18675	1RB#38	23.62	26.62	33.00
			18675	36RB#0	23.33	26.33	33.00
			18675	36RB#39	23.15	26.15	33.00
			18675	36RB#18	23.09	26.09	33.00
			18675	75RB#0	23.22	26.22	33.00
			18900	1RB#38	23.8	26.80	33.00
			18900	1RB#74	23.22	26.22	33.00
			18900	1RB#0	22.97	25.97	33.00
			18900	36RB#18	23.4	26.40	33.00
			18900	36RB#0	23.32	26.32	33.00
			18900	36RB#39	23.46	26.46	33.00
			18900	75RB#0	23.37	26.37	33.00
			19125	1RB#74	23.73	26.73	33.00
			19125	1RB#0	23.12	26.12	33.00
			19125	1RB#38	24	27.00	33.00
			19125	36RB#0	23.4	26.40	33.00
			19125	36RB#39	23.57	26.57	33.00
			19125	36RB#18	23.58	26.58	33.00
			19125	75RB#0	23.43	26.43	33.00

Cellular Band	Cell Bandwidth	Modulation technique	Channel Number	RBpos/RB allocation	Measured Average Power(dBm)	EIRP (dBm)	limit (dBm)
Band2	20MHz	QPSK	18700	1RB#99	23.67	26.67	33.00
			18700	1RB#49	23.33	26.33	33.00
			18700	1RB#0	22.64	25.64	33.00
			18700	50RB#25	24.21	27.21	33.00
			18700	50RB#0	23.75	26.75	33.00
			18700	50RB#50	23.34	26.34	33.00
			18700	100RB#0	23.90	26.90	33.00
			18900	1RB#99	23.10	26.10	33.00
			18900	1RB#0	22.84	25.84	33.00
			18900	1RB#49	23.70	26.70	33.00
			18900	50RB#25	23.64	26.64	33.00
			18900	50RB#0	23.44	26.44	33.00
			18900	50RB#50	23.60	26.60	33.00
			18900	100RB#0	23.52	26.52	33.00
			19100	1RB#0	23.00	26.00	33.00
			19100	1RB#49	23.45	26.45	33.00
			19100	1RB#99	22.39	25.39	33.00
			19100	50RB#0	23.73	26.73	33.00
			19100	50RB#25	23.47	26.47	33.00
			19100	50RB#50	23.39	26.39	33.00
			19100	100RB#0	24.00	27.00	33.00
		16QAM	18700	1RB#0	23.15	26.15	33.00
			18700	1RB#49	23.82	26.82	33.00
			18700	1RB#99	23.25	26.25	33.00
			18700	50RB#50	23.15	26.15	33.00
			18700	50RB#0	23.15	26.15	33.00
			18700	50RB#25	23.19	26.19	33.00
			18700	100RB#0	23.29	26.29	33.00
			18900	1RB#0	23.52	26.52	33.00
			18900	1RB#49	23.32	26.32	33.00
			18900	1RB#99	22.68	25.68	33.00
			18900	50RB#0	23.36	26.36	33.00
			18900	50RB#50	23.55	26.55	33.00
			18900	50RB#25	23.59	26.59	33.00
			18900	100RB#0	23.35	26.35	33.00
			19100	1RB#0	23.55	26.55	33.00
			19100	1RB#99	23.72	26.72	33.00
			19100	1RB#49	23.94	26.94	33.00

Cellular Band	Cell Bandwidth	Modulation technique	Channel Number	RBpos/RB allocation	Measured Average Power(dBm)	EIRP (dBm)	limit (dBm)
Band25	1.4MHz	QPSK	26047	1RB#0	22.69	25.69	33.00
			26047	1RB#2	22.78	25.78	33.00
			26047	1RB#5	22.73	25.73	33.00
			26047	3RB#1	23.7	26.7	33.00
			26047	3RB#0	23.68	26.68	33.00
			26047	3RB#3	23.66	26.66	33.00
			26047	6RB#0	23.66	26.66	33.00
			26365	1RB#5	23.39	26.39	33.00
			26365	1RB#0	23.38	26.38	33.00
			26365	1RB#2	23.54	26.54	33.00
			26365	3RB#0	23.46	26.46	33.00
			26365	3RB#1	23.46	26.46	33.00
			26365	3RB#3	23.46	26.46	33.00
			26365	6RB#0	23.39	26.39	33.00
			26683	1RB#2	22.74	25.74	33.00
			26683	1RB#5	22.61	25.61	33.00
			26683	1RB#0	22.47	25.47	33.00
			26683	3RB#0	23.53	26.53	33.00
			26683	3RB#3	23.86	26.86	33.00
			26683	3RB#1	23.54	26.54	33.00
			26683	6RB#0	23.58	26.58	33.00
	1.4MHz	16QAM	26047	1RB#2	22.72	25.72	33.00
			26047	1RB#5	22.69	25.69	33.00
			26047	1RB#0	22.61	25.61	33.00
			26047	3RB#0	23.66	26.66	33.00
			26047	3RB#1	23.63	26.63	33.00
			26047	3RB#3	23.61	26.61	33.00
			26047	6RB#0	21.55	24.55	33.00
			26365	1RB#5	22.93	25.93	33.00
			26365	1RB#0	22.94	25.94	33.00
			26365	1RB#2	23.12	26.12	33.00
			26365	3RB#3	23.96	26.96	33.00
			26365	3RB#1	23.89	26.89	33.00
			26365	3RB#0	23.89	26.89	33.00
			26365	6RB#0	23.86	26.86	33.00
			26683	1RB#2	23.31	26.31	33.00
			26683	1RB#5	23.18	26.18	33.00
			26683	1RB#0	22.91	25.91	33.00
			26683	3RB#3	23.14	26.14	33.00
			26683	3RB#1	22.03	25.03	33.00
			26683	3RB#0	22.91	25.91	33.00
			26683	6RB#0	23.33	26.33	33.00

Cellular Band	Cell Bandwidth	Modulation technique	Channel Number	RBpos/RB allocation	Measured Average Power(dBm)	EIRP (dBm)	limit (dBm)
Band25	3MHz	QPSK	26055	1RB#14	22.4	25.4	33.00
			26055	1RB#0	22.44	25.44	33.00
			26055	1RB#8	22.35	25.35	33.00
			26055	8RB#7	24.13	27.13	33.00
			26055	8RB#4	24.18	27.18	33.00
			26055	8RB#0	24.14	27.14	33.00
			26055	15RB#0	23.32	26.32	33.00
			26365	1RB#14	22.38	25.38	33.00
			26365	1RB#8	22.37	25.37	33.00
			26365	1RB#0	22.48	25.48	33.00
			26365	8RB#7	24.19	27.19	33.00
			26365	8RB#0	24.16	27.16	33.00
			26365	8RB#4	24.24	27.24	33.00
			26365	15RB#0	23.33	26.33	33.00
			26675	1RB#14	23.17	26.17	33.00
			26675	1RB#8	22.91	25.91	33.00
			26675	1RB#0	22.65	25.65	33.00
			26675	8RB#4	23.9	26.9	33.00
			26675	8RB#0	23.65	26.65	33.00
			26675	8RB#7	23.91	26.91	33.00
			26675	15RB#0	23.64	26.64	33.00
	3MHz	16QAM	26055	1RB#8	23.43	26.43	33.00
			26055	1RB#14	23.5	26.5	33.00
			26055	1RB#0	23.57	26.57	33.00
			26055	8RB#0	23.19	26.19	33.00
			26055	8RB#7	23.22	26.22	33.00
			26055	8RB#4	23.33	26.33	33.00
			26055	15RB#0	23.27	26.27	33.00
			26365	1RB#8	23.17	26.17	33.00
			26365	1RB#14	23.09	26.09	33.00
			26365	1RB#0	23.21	26.21	33.00
			26365	8RB#4	23.62	26.62	33.00
			26365	8RB#0	23.64	26.64	33.00
			26365	8RB#7	23.63	26.63	33.00
			26365	15RB#0	23.59	26.59	33.00
			26675	1RB#14	23.12	26.12	33.00
			26675	1RB#0	23.23	26.23	33.00
			26675	1RB#8	23.18	26.18	33.00
			26675	8RB#0	23.65	26.65	33.00
			26675	8RB#7	23.57	26.57	33.00
			26675	8RB#4	23.65	26.65	33.00
			26675	15RB#0	23.6	26.6	33.00

Cellular Band	Cell Bandwidth	Modulation technique	Channel Number	RBpos/RB allocation	Measured Average Power(dBm)	EIRP (dBm)	limit (dBm)
Band25	5MHz	QPSK	26065	1RB#24	22.5	25.5	33.00
			26065	1RB#12	22.33	25.33	33.00
			26065	1RB#0	22.52	25.52	33.00
			26065	12RB#6	23.25	26.25	33.00
			26065	12RB#0	23.34	26.34	33.00
			26065	12RB#13	23.25	26.25	33.00
			26065	25RB#0	23.39	26.39	33.00
			26365	1RB#24	24.46	27.46	33.00
			26365	1RB#0	22.55	25.55	33.00
			26365	1RB#12	22.37	25.37	33.00
			26365	12RB#6	23.28	26.28	33.00
			26365	12RB#0	23.36	26.36	33.00
			26365	12RB#13	23.3	26.3	33.00
			26365	25RB#0	23.31	26.31	33.00
			26665	1RB#0	22.58	25.58	33.00
			26665	1RB#12	22.64	25.64	33.00
			26665	1RB#24	23.15	26.15	33.00
			26665	12RB#0	23.29	26.29	33.00
			26665	12RB#6	23.7	26.7	33.00
			26665	12RB#13	23.68	26.68	33.00
			26665	25RB#0	24.19	27.19	33.00
	5MHz	16QAM	26065	1RB#0	22.3	25.3	33.00
			26065	1RB#12	22.15	25.15	33.00
			26065	1RB#24	22.23	25.23	33.00
			26065	12RB#13	23.25	26.25	33.00
			26065	12RB#0	23.31	26.31	33.00
			26065	12RB#6	23.41	26.41	33.00
			26065	25RB#0	23.52	26.52	33.00
			26365	1RB#0	23.25	26.25	33.00
			26365	1RB#12	23.2	26.2	33.00
			26365	1RB#24	23.15	26.15	33.00
			26365	12RB#0	23.09	26.09	33.00
			26365	12RB#13	23.02	26.02	33.00
			26365	12RB#6	23.03	26.03	33.00
			26365	25RB#0	23.16	26.16	33.00
			26665	1RB#0	22.64	25.64	33.00
			26665	1RB#24	22.36	25.36	33.00
			26665	1RB#12	22.73	25.73	33.00
			26665	12RB#0	23.34	26.34	33.00
			26665	12RB#6	23.18	26.18	33.00
			26665	12RB#13	23.19	26.19	33.00
			26665	25RB#0	23.26	26.26	33.00

Cellular Band	Cell Bandwidth	Modulation technique	Channel Number	RBpos/RB allocation	Measured Average Power(dBm)	EIRP (dBm)	limit (dBm)
Band25	10MHz	QPSK	26090	1RB#0	22.82	25.82	33.00
			26090	1RB#24	23.13	26.13	33.00
			26090	1RB#49	22.87	25.87	33.00
			26090	25RB#12	23.99	26.99	33.00
			26090	25RB#0	24.12	27.12	33.00
			26090	25RB#25	24.01	27.01	33.00
			26090	50RB#0	24.11	27.11	33.00
			26365	1RB#49	23.20	26.20	33.00
			26365	1RB#0	23.83	26.83	33.00
			26365	1RB#24	23.87	26.87	33.00
			26365	25RB#0	24.20	27.20	33.00
			26365	25RB#12	24.18	27.18	33.00
			26365	25RB#25	23.51	26.51	33.00
			26365	50RB#0	23.58	26.58	33.00
			26640	1RB#24	22.56	25.56	33.00
			26640	1RB#49	22.57	25.57	33.00
			26640	1RB#0	22.92	25.92	33.00
			26640	25RB#0	23.69	26.69	33.00
			26640	25RB#25	23.42	26.42	33.00
			26640	25RB#12	23.41	26.41	33.00
			26640	50RB#0	23.55	26.55	33.00
	10MHz	16QAM	26090	1RB#24	23.11	26.11	33.00
			26090	1RB#49	22.90	25.90	33.00
			26090	1RB#0	22.97	25.97	33.00
			26090	25RB#0	23.81	26.81	33.00
			26090	25RB#12	23.38	26.38	33.00
			26090	25RB#25	23.44	26.44	33.00
			26090	50RB#0	23.31	26.31	33.00
			26365	1RB#49	23.79	26.79	33.00
			26365	1RB#0	23.42	26.42	33.00
			26365	1RB#24	23.50	26.50	33.00
			26365	25RB#25	23.41	26.41	33.00
			26365	25RB#12	23.38	26.38	33.00
			26365	25RB#0	23.41	26.41	33.00
			26365	50RB#0	23.31	26.31	33.00
			26640	1RB#24	23.55	26.55	33.00
			26640	1RB#49	23.25	26.25	33.00
			26640	1RB#0	22.99	25.99	33.00
			26640	25RB#25	23.40	26.40	33.00
			26640	25RB#12	23.42	26.42	33.00
			26640	25RB#0	23.58	26.58	33.00
			26640	50RB#0	23.38	26.38	33.00

Cellular Band	Cell Bandwidth	Modulation technique	Channel Number	RBpos/RB allocation	Measured Average Power(dBm)	EIRP (dBm)	limit (dBm)
Band25	15MHz	QPSK	26115	1RB#74	22.92	25.92	33.00
			26115	1RB#0	22.96	25.96	33.00
			26115	1RB#38	23.14	26.14	33.00
			26115	36RB#39	23.97	26.97	33.00
			26115	36RB#18	23.98	26.98	33.00
			26115	36RB#0	24.09	27.09	33.00
			26115	75RB#0	24.00	27.00	33.00
			26365	1RB#74	22.33	25.33	33.00
			26365	1RB#38	22.87	25.87	33.00
			26365	1RB#0	22.90	25.90	33.00
			26365	36RB#0	24.19	27.19	33.00
			26365	36RB#39	24.17	27.17	33.00
			26365	36RB#18	24.16	27.16	33.00
			26365	75RB#0	23.64	26.64	33.00
			26615	1RB#74	22.64	25.64	33.00
			26615	1RB#38	22.91	25.91	33.00
			26615	1RB#0	23.09	26.09	33.00
			26615	36RB#18	23.26	26.26	33.00
			26615	36RB#0	24.08	27.08	33.00
			26615	36RB#39	23.27	26.27	33.00
			26615	75RB#0	23.62	26.62	33.00
	15MHz	16QAM	26115	1RB#0	23.41	26.41	33.00
			26115	1RB#74	23.46	26.46	33.00
			26115	1RB#38	23.59	26.59	33.00
			26115	36RB#0	23.33	26.33	33.00
			26115	36RB#39	23.32	26.32	33.00
			26115	36RB#18	23.33	26.33	33.00
			26115	75RB#0	23.36	26.36	33.00
			26365	1RB#38	23.44	26.44	33.00
			26365	1RB#74	23.92	26.92	33.00
			26365	1RB#0	23.51	26.51	33.00
			26365	36RB#18	23.26	26.26	33.00
			26365	36RB#0	23.29	26.29	33.00
			26365	36RB#39	23.37	26.37	33.00
			26365	75RB#0	23.4	26.4	33.00
			26615	1RB#74	22.76	25.76	33.00
			26615	1RB#0	23.1	26.1	33.00
			26615	1RB#38	23	26	33.00
			26615	36RB#0	23.15	26.15	33.00
			26615	36RB#39	23.11	26.11	33.00
			26615	36RB#18	23.48	26.48	33.00
			26615	75RB#0	23.29	26.29	33.00

Cellular Band	Cell Bandwidth	Modulation technique	Channel Number	RBpos/RB allocation	Measured Average Power(dBm)	EIRP (dBm)	limit (dBm)
Band25	20MHz	QPSK	26140	1RB#99	22.67	25.67	33.00
			26140	1RB#49	23.11	26.11	33.00
			26140	1RB#0	22.67	25.67	33.00
			26140	50RB#25	23.74	26.74	33.00
			26140	50RB#0	23.87	26.87	33.00
			26140	50RB#50	23.71	26.71	33.00
			26140	100RB#0	23.78	26.78	33.00
			26365	1RB#99	23.17	26.17	33.00
			26365	1RB#0	23.75	26.75	33.00
			26365	1RB#49	23.85	26.85	33.00
			26365	50RB#25	23.16	26.16	33.00
			26365	50RB#0	23.65	26.65	33.00
			26365	50RB#50	23.21	26.21	33.00
			26365	100RB#0	23.41	26.41	33.00
			26590	1RB#0	23.4	26.4	33.00
			26590	1RB#49	24.06	27.06	33.00
			26590	1RB#99	23.3	26.3	33.00
			26590	50RB#0	23.96	26.96	33.00
			26590	50RB#25	23.31	26.31	33.00
			26590	50RB#50	23.31	26.31	33.00
			26590	100RB#0	23.61	26.61	33.00
	20MHz	16QAM	26140	1RB#0	23.23	26.23	33.00
			26140	1RB#49	23.61	26.61	33.00
			26140	1RB#99	24.2	27.2	33.00
			26140	50RB#50	23.21	26.21	33.00
			26140	50RB#0	23.25	26.25	33.00
			26140	50RB#25	23.91	26.91	33.00
			26140	100RB#0	23.22	26.22	33.00
			26365	1RB#0	23.98	26.98	33.00
			26365	1RB#49	23.97	26.97	33.00
			26365	1RB#99	23.4	26.4	33.00
			26365	50RB#0	23.3	26.3	33.00
			26365	50RB#50	23.17	26.17	33.00
			26365	50RB#25	23.26	26.26	33.00
			26365	100RB#0	23.29	26.29	33.00
			26590	1RB#0	23.76	26.76	33.00
			26590	1RB#99	23.99	26.99	33.00
			26590	1RB#49	23.47	26.47	33.00
			26590	50RB#0	23.4	26.4	33.00
			26590	50RB#25	23.32	26.32	33.00
			26590	50RB#50	23.4	26.4	33.00
			26590	100RB#0	23.35	26.35	33.00

Test Results of WCDMA:

Band	Channel Number	Channel frequency (MHz)	Measured Average power (dBm)	Measured e.i.r.p (dBm)	Limit (dBm)
2	9262	1852.40	23.26	26.26	33.00
	9400	1880.00	23.08	26.08	33.00
	9538	1907.60	22.49	25.49	33.00

7.3 Field Strength of Spurious Radiation

Result ***Pass***

Specification	FCC Part §2.1053 & §24.238(a)
Test Method / Procedure	As per subclause 5.5 of ANSI C63.26-2015 As per subclause 7 in 971168 D01 Power Meas License Digital Systems v03r01
Measurement Bandwidth (RBW)	100 kHz for frequency range < 1GHz 1 MHz for Frequency range >1GHz
Detector Function	Peak
Measuring Distance	3 m
Requirement	The power of any emission outside the authorized frequency range must be attenuated below the transmitting power (P) by a factor of at least 43+10log(P) dB
Test setup	Reffer TEST METHODOLOGY

Environmental conditions:

Temperature (Norm) = + 24 °C Voltage = 12VDC through AC-DC Adapter Relative humidity = 62 %

Note: All the losses are included during measurement and final values are mentioned in the test report. Refer TEST METHODOLOGY for more details

Note:

1. All the losses are included during measurement and final values are mentioned in the test report.
2. Spurious emission limit is derived using the following equation: 43 + 10*log(P) = 43 + 10*log(P) = -13

P is average power in W

Test results:

Test results for frequency range 30MHz – 200MHz

Antenna Polarization	Measured Frequency (MHz)	Measured Emission (dBm)	Limit (dBm)	Margin (dB)
Vertical	35.10	-19.57	-13.00	-6.57
	48.66	-20.33	-13.00	-7.33
	77.49	-18.54	-13.00	-5.54
	150.03	-18.42	-13.00	-5.42
	192.84	-16.60	-13.00	-3.60
Horizontal	32.31	-31.94	-13.00	-18.94
	53.04	-34.17	-13.00	-21.17
	80.13	-32.57	-13.00	-19.57
	150.00	-20.94	-13.00	-7.94

Plots for frequency range 30MHz to 200MHz

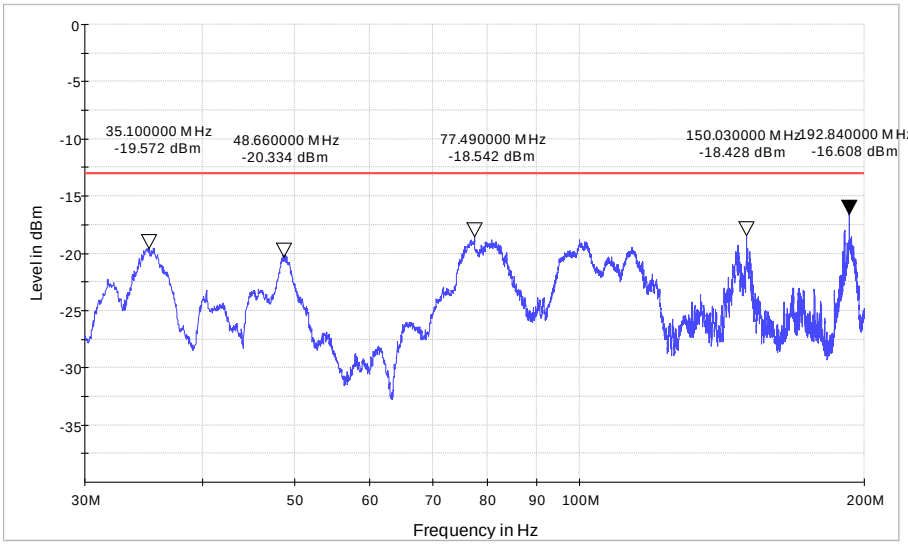

Frequency Range: 30MHz-200MHz **Polarization: Vertical**

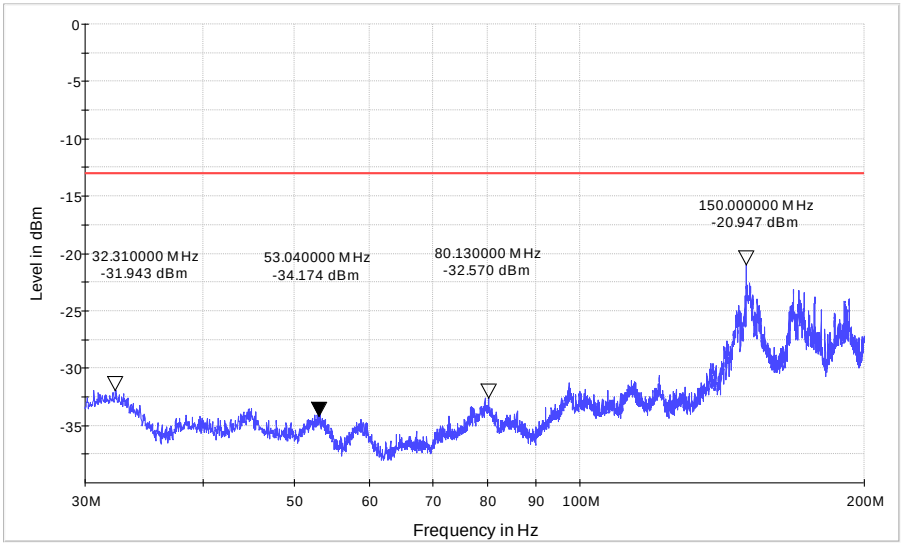

Frequency Range: 30MHz-200MHz **Polarization: Horizontal**

Test results for frequency range 200MHz – 1GHz

Antenna Polarization	Measured Frequency (MHz)	Measured Emission (dBm)	Limit (dBm)	Margin (dB)
Vertical	201.86	-14.94	-13.00	-1.94
	299.99	-18.97	-13.00	-5.97
	400.01	-18.57	-13.00	-5.57
	590.81	-25.84	-13.00	-12.84
	898.40	-27.65	-13.00	-14.65
Horizontal	201.89	-17.56	-13.00	-4.56
	312.02	-19.07	-13.00	-6.07
	424.97	-20.29	-13.00	-7.29
	647.36	-25.11	-13.00	-12.11
	884.48	-27.32	-13.00	-14.32

Test Plots for Frequency range of 200MHz to 1GHz:

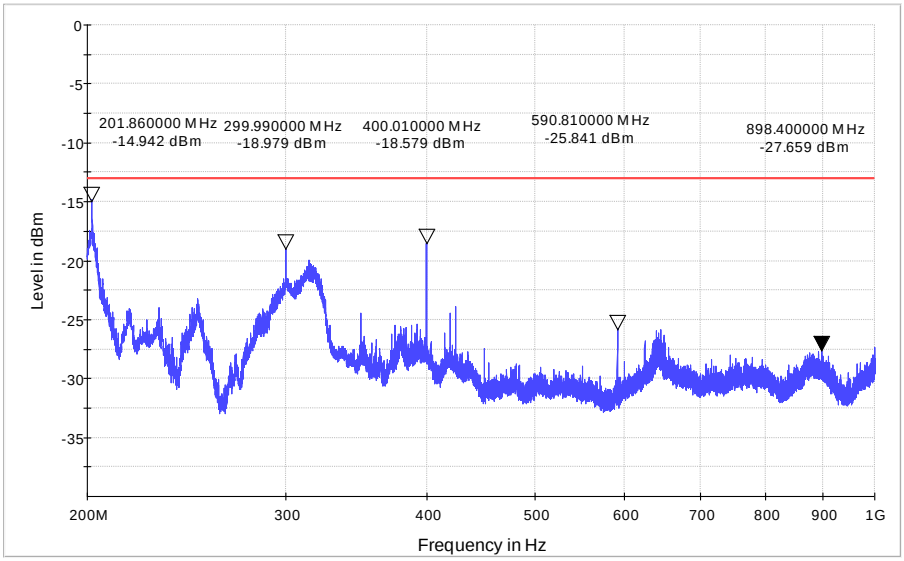

Frequency Range: 200MHz-1GHz **Polarization: Vertical**

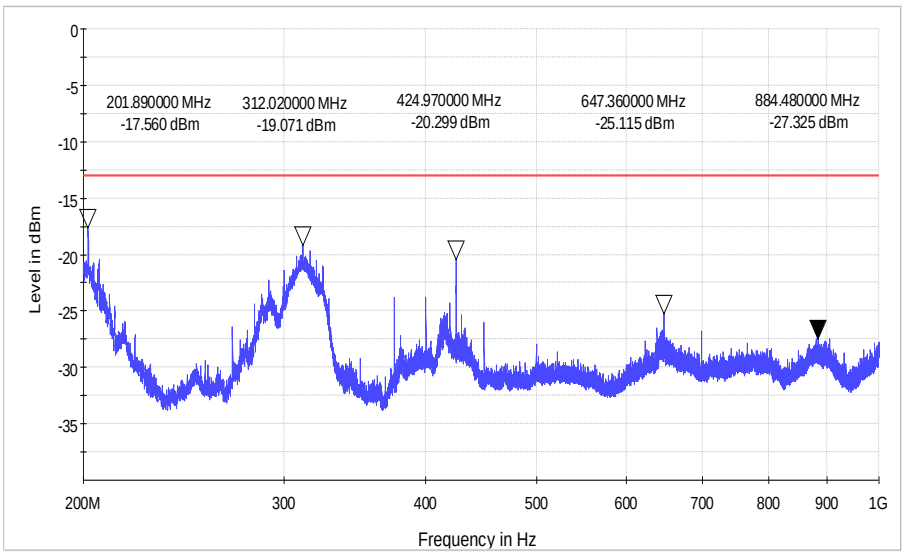

Frequency Range: 200MHz-1GHz **Polarization: Horizontal**

Above 1GHz Test results:

LTE Band2:

Band	Modulation	Cell BW	No. of RB	RB Pos	Channel Frequency (MHz)	Measured Frequency (MHz	Antenna Polarization	Emission Level (dBm)	Limit (dBm)	Margin (dB)
2	QPSK	1.4	3	1	1850.70	3701.40	Vertical	-50.79	-13	-37.79
						5552.10		-47.85	-13	-34.85
						7402.80		-50.79	-13	-37.79
						3701.40	Horizontal	-53.19	-13	-40.19
						5552.10		-48.00	-13	-35.00
						7402.80		-51.33	-13	-38.33
			3	1	1880.00	3760.00	Vertical	-52.54	-13	-39.54
						5640.00		-49.72	-13	-36.72
						7520.00		-51.24	-13	-38.24
						3760.00	Horizontal	-53.31	-13	-40.31
						5640.00		-49.57	-13	-36.57
						7520.00		-50.55	-13	-37.55
			3	1	1909.20	3818.40	Vertical	-51.73	-13	-38.73
						5727.60		-48.97	-13	-35.97
						7636.80		-52.02	-13	-39.02
						3818.40	Horizontal	-51.32	-13	-38.32
						5727.60		-49.91	-13	-36.91
						7636.80		-50.59	-13	-37.59
		3	8	0	1851.50	3703.00	Vertical	-53.77	-13	-40.77
						5554.50		-49.70	-13	-36.70
						7406.00		-51.53	-13	-38.53
						3703.00	Horizontal	-53.79	-13	-40.79
						5554.50		-50.16	-13	-37.16
						7406.00		-51.70	-13	-38.70
			8	7	1880.00	3760.00	Vertical	-52.37	-13	-39.37
						5640.00		-50.23	-13	-37.23
						7520.00		-51.06	-13	-38.06
						3760.00	Horizontal	-53.06	-13	-40.06
						5640.00		-49.80	-13	-36.80
						7520.00		-51.37	-13	-38.37
			8	0	1908.40	3816.80	Vertical	-53.34	-13	-40.34
						5725.20		-50.08	-13	-37.08
						7633.60		-51.75	-13	-38.75
						3816.80	Horizontal	-53.28	-13	-40.28
						5725.20		-49.63	-13	-36.63
						7633.60		-51.80	-13	-38.80

Band	Modulation	Cell BW	No. of RB	RB Pos	Channel Frequency (MHz)	Measured Frequency (MHz	Antenna Polarization	Emission Level (dBm)	Limit (dBm)	Margin (dB)
2	QPSK	5	12	6	1852.50	3705.00	Vertical	-53.66	-13	-40.66
						5557.50		-50.32	-13	-37.32
						7410.00		-51.25	-13	-38.25
						3705.00	Horizontal	-52.61	-13	-39.61
						5557.50		-49.98	-13	-36.98
						7410.00		-51.05	-13	-38.05
			12	6	1880.00	3760.00	Vertical	-52.93	-13	-39.93
						5640.00		-49.52	-13	-36.52
						7520.00		-51.65	-13	-38.65
						3760.00	Horizontal	-54.13	-13	-41.13
						5640.00		-50.03	-13	-37.03
						7520.00		-50.09	-13	-37.09
			1	24	1907.40	3814.80	Vertical	-53.04	-13	-40.04
						5722.20		-50.17	-13	-37.17
						7629.60		-50.74	-13	-37.74
						3814.80	Horizontal	-53.38	-13	-40.38
						5722.20		-50.28	-13	-37.28
						7629.60		-50.97	-13	-37.97
		10	25	12	1855.00	3710.00	Vertical	-53.90	-13	-40.90
						5565.00		-50.44	-13	-37.44
						7420.00		-51.11	-13	-38.11
						3710.00	Horizontal	-54.11	-13	-41.11
						5565.00		-49.72	-13	-36.72
						7420.00		-51.49	-13	-38.49
			25	0	1880.00	3760.00	Vertical	-53.03	-13	-40.03
						5640.00		-50.38	-13	-37.38
						7520.00		-51.20	-13	-38.20
						3760.00	Horizontal	-53.50	-13	-40.50
						5640.00		-51.00	-13	-38.00
						7520.00		-50.77	-13	-37.77
			1	4	1904.90	3809.80	Vertical	-53.16	-13	-40.16
						5714.70		-51.25	-13	-38.25
						7619.60		-51.43	-13	-38.43
						3809.80	Horizontal	-53.22	-13	-40.22
						5714.70		-50.65	-13	-37.65
						7619.60		-51.39	-13	-38.39

Band	Modulation	Cell BW	No. of RB	RB Pos	Channel Frequency (MHz)	Measured Frequency (MHz	Antenna Polarization	Emission Level (dBm)	Limit (dBm)	Margin (dB)
2	QPSK	15	36	0	1857.50	3715.00	Vertical	-52.80	-13	-39.80
						5572.50		-50.74	-13	-37.74
						7430.00		-50.32	-13	-37.32
						3715.00	Horizontal	-52.84	-13	-39.84
						5572.50		-50.61	-13	-37.61
						7430.00		-50.18	-13	-37.18
			75	0	1880.00	3760.00	Vertical	-53.81	-13	-40.81
						5640.00		-49.50	-13	-36.50
						7520.00		-50.89	-13	-37.89
						3760.00	Horizontal	-53.97	-13	-40.97
						5640.00		-50.16	-13	-37.16
						7520.00		-50.96	-13	-37.96
			75	0	1902.40	3804.80	Vertical	-53.63	-13	-40.63
						5707.20		-50.86	-13	-37.86
						7609.60		-51.55	-13	-38.55
						3804.80	Horizontal	-53.04	-13	-40.04
						5707.20		-50.66	-13	-37.66
						7609.60		-51.17	-13	-38.17
		20	50	25	1860.00	3720.00	Vertical	-53.54	-13	-40.54
						5580.00		-50.38	-13	-37.38
						7440.00		-51.33	-13	-38.33
						3720.00	Horizontal	-53.47	-13	-40.47
						5580.00		-49.78	-13	-36.78
						7440.00		-51.15	-13	-38.15
			1	49	1880.00	3760.00	Vertical	-53.31	-13	-40.31
						5640.00		-48.55	-13	-35.55
						7520.00		-50.90	-13	-37.90
						3760.00	Horizontal	-53.73	-13	-40.73
						5640.00		-49.41	-13	-36.41
						7520.00		-51.75	-13	-38.75
			100	0	1900.00	3800.00	Vertical	-53.35	-13	-40.35
						5700.00		-50.87	-13	-37.87
						7600.00		-51.06	-13	-38.06
						3800.00	Horizontal	-53.41	-13	-40.41
						5700.00		-51.16	-13	-38.16
						7600.00		-51.83	-13	-38.83

Band	Modulation	Cell BW	No. of RB	RB Pos	Channel Frequency (MHz)	Measured Frequency (MHz	Antenna Polarization	Emission Level (dBm)	Limit (dBm)	Margin (dB)
2	16QAM	1.4	3	3	1850.70	3701.40	Vertical	-53.80	-13	-40.80
						5552.10		-49.18	-13	-36.18
						7402.80		-51.34	-13	-38.34
						3701.40	Horizontal	-53.45	-13	-40.45
						5552.10		-49.27	-13	-36.27
						7402.80		-51.55	-13	-38.55
			3	1	1880.00	3760.00	Vertical	-53.96	-13	-40.96
						5640.00		-50.23	-13	-37.23
						7520.00		-50.75	-13	-37.75
						3760.00	Horizontal	-53.81	-13	-40.81
						5640.00		-50.46	-13	-37.46
						7520.00		-49.91	-13	-36.91
			6	0	1909.20	3818.40	Vertical	-52.53	-13	-39.53
						5727.60		-49.68	-13	-36.68
						7636.80		-54.72	-13	-41.72
						3818.40	Horizontal	-52.05	-13	-39.05
						5727.60		-50.64	-13	-37.64
						7636.80		-51.65	-13	-38.65
		3	8	7	1851.50	3703.00	Vertical	-53.61	-13	-40.61
						5554.50		-50.43	-13	-37.43
						7406.00		-50.31	-13	-37.31
						3703.00	Horizontal	-53.62	-13	-40.62
						5554.50		-49.38	-13	-36.38
						7406.00		-51.11	-13	-38.11
			8	0	1880.00	3760.00	Vertical	-54.07	-13	-41.07
						5640.00		-49.78	-13	-36.78
						7520.00		-51.57	-13	-38.57
						3760.00	Horizontal	-53.38	-13	-40.38
						5640.00		-50.52	-13	-37.52
						7520.00		-51.13	-13	-38.13
			8	0	1908.40	3816.80	Vertical	-52.80	-13	-39.80
						5725.20		-49.95	-13	-36.95
						7633.60		-52.20	-13	-39.20
						3816.80	Horizontal	-53.17	-13	-40.17
						5725.20		-49.38	-13	-36.38
						7633.60		-51.35	-13	-38.35

Band	Modulation	Cell BW	No. of RB	RB Pos	Channel Frequency (MHz)	Measured Frequency (MHz	Antenna Polarization	Emission Level (dBm)	Limit (dBm)	Margin (dB)
						3705.00		-54.22	-13	-41.22
						5557.50	Vertical	-50.64	-13	-37.64
						7410.00		-51.68	-13	-38.68
			1	0	1852.50	3705.00		-53.51	-13	-40.51
						5557.50	Horizontal	-50.37	-13	-37.37
						7410.00		-51.71	-13	-38.71
						3760.00		-52.29	-13	-39.29
						5640.00	Vertical	-50.46	-13	-37.46
						7520.00		-50.91	-13	-37.91
		5	1	12	1880.00	3760.00		-53.80	-13	-40.80
						5640.00	Horizontal	-49.74	-13	-36.74
						7520.00		-50.96	-13	-37.96
						3814.80		-49.77	-13	-36.77
						5722.20	Vertical	-49.50	-13	-36.50
						7629.60		-51.30	-13	-38.30
			1	12	1907.40	3814.80		-52.16	-13	-39.16
						5722.20	Horizontal	-48.36	-13	-35.36
						7629.60		-50.90	-13	-37.90
						3710.00		-53.18	-13	-40.18
						5565.00	Vertical	-50.55	-13	-37.55
						7420.00		-51.32	-13	-38.32
			25	12	1855.00	3710.00		-54.03	-13	-41.03
						5565.00	Horizontal	-50.12	-13	-37.12
						7420.00		-51.26	-13	-38.26
						3760.00		-52.75	-13	-39.75
						5640.00	Vertical	-50.70	-13	-37.70
						7520.00		-51.00	-13	-38.00
		10	25	12	1880.00	3760.00		-53.13	-13	-40.13
						5640.00	Horizontal	-50.94	-13	-37.94
						7520.00		-50.60	-13	-37.60
						3809.80		-52.57	-13	-39.57
						5714.70	Vertical	-50.98	-13	-37.98
						7619.60		-51.35	-13	-38.35
			25	12	1904.90	3809.80		-53.40	-13	-40.40
						5714.70	Horizontal	-51.10	-13	-38.10
						7619.60		-51.49	-13	-38.49

Band	Modulation	Cell BW	No. of RB	RB Pos	Channel Frequency (MHz)	Measured Frequency (MHz	Antenna Polarization	Emission Level (dBm)	Limit (dBm)	Margin (dB)
2	16QAM	15	1	38	1857.50	3715.00	Vertical	-53.39	-13	-40.39
						5572.50		-50.45	-13	-37.45
						7430.00		-51.04	-13	-38.04
						3715.00	Horizontal	-53.03	-13	-40.03
						5572.50		-49.91	-13	-36.91
						7430.00		-51.30	-13	-38.30
			1	38	1880.00	3760.00	Vertical	-53.26	-13	-40.26
						5640.00		-50.18	-13	-37.18
						7520.00		-51.24	-13	-38.24
						3760.00	Horizontal	-53.45	-13	-40.45
						5640.00		-50.81	-13	-37.81
						7520.00		-51.21	-13	-38.21
			1	38	1902.40	3804.80	Vertical	-51.90	-13	-38.90
						5707.20		-50.55	-13	-37.55
						7609.60		-51.01	-13	-38.01
						3804.80	Horizontal	-51.69	-13	-38.69
						5707.20		-50.39	-13	-37.39
						7609.60		-50.57	-13	-37.57
		20	1	49	1860.00	3720.00	Vertical	-53.77	-13	-40.77
						5580.00		-49.38	-13	-36.38
						7440.00		-51.18	-13	-38.18
						3720.00	Horizontal	-52.97	-13	-39.97
						5580.00		-49.87	-13	-36.87
						7440.00		-51.41	-13	-38.41
			50	25	1880.00	3760.00	Vertical	-52.83	-13	-39.83
						5640.00		-50.84	-13	-37.84
						7520.00		-50.59	-13	-37.59
						3760.00	Horizontal	-53.01	-13	-40.01
						5640.00		-50.33	-13	-37.33
						7520.00		-50.91	-13	-37.91
			1	49	1900.00	3800.00	Vertical	-50.65	-13	-37.65
						5700.00		-49.70	-13	-36.70
						7600.00		-51.84	-13	-38.84
						3800.00	Horizontal	-52.07	-13	-39.07
						5700.00		-50.89	-13	-37.89
						7600.00		-50.72	-13	-37.72

LTE Band25:

Band	Modulation	Cell BW	No. of RB	RB Pos	Channel Frequency (MHz)	Measured Frequency (MHz	Antenna Polarization	Emission Level (dBm)	Limit (dBm)	Margin (dB)
25	QPSK	1.4	3	0	1850.70	3701.40	Vertical	-52.12	-13	-39.12
						5552.10		-49.10	-13	-36.10
						7402.80		-50.32	-13	-37.32
						3701.40	Horizontal	-53.28	-13	-40.28
						5552.10		-50.43	-13	-37.43
						7402.80		-51.97	-13	-38.97
			1	2	1882.50	3765.00	Vertical	-53.69	-13	-40.69
						5647.50		-48.73	-13	-35.73
						7530.00		-51.04	-13	-38.04
						3765.00	Horizontal	-53.47	-13	-40.47
						5647.50		-50.48	-13	-37.48
						7530.00		-51.17	-13	-38.17
			3	3	1914.30	3828.60	Vertical	-52.54	-13	-39.54
						5742.90		-49.78	-13	-36.78
						7657.20		-51.77	-13	-38.77
						3828.60	Horizontal	-53.28	-13	-40.28
						5742.90		-50.94	-13	-37.94
						7657.20		-51.45	-13	-38.45
		3	8	4	1851.50	3703.00	Vertical	-54.00	-13	-41.00
						5554.50		-47.03	-13	-34.03
						7406.00		-50.38	-13	-37.38
						3703.00	Horizontal	-53.14	-13	-40.14
						5554.50		-49.54	-13	-36.54
						7406.00		-50.99	-13	-37.99
			8	4	1882.50	3765.00	Vertical	-52.80	-13	-39.80
						5647.50		-49.72	-13	-36.72
						7530.00		-51.05	-13	-38.05
						3765.00	Horizontal	-53.56	-13	-40.56
						5647.50		-50.55	-13	-37.55
						7530.00		-50.84	-13	-37.84
			8	7	1913.50	3827.00	Vertical	-53.08	-13	-40.08
						5740.50		-47.15	-13	-34.15
						7654.00		-51.14	-13	-38.14
						3827.00	Horizontal	-53.09	-13	-40.09
						5740.50		-50.18	-13	-37.18
						7654.00		-51.27	-13	-38.27

Band	Modulation	Cell BW	No. of RB	RB Pos	Channel Frequency (MHz)	Measured Frequency (MHz	Antenna Polarization	Emission Level (dBm)	Limit (dBm)	Margin (dB)
25	QPSK	5	25	0	1852.50	3705.00	Vertical	-53.67	-13	-40.67
						5557.50		-49.87	-13	-36.87
						7410.00		-50.78	-13	-37.78
						3705.00	Horizontal	-53.25	-13	-40.25
						5557.50		-48.63	-13	-35.63
						7410.00		-51.27	-13	-38.27
			1	24	1882.50	3765.00	Vertical	-53.42	-13	-40.42
						5647.50		-50.65	-13	-37.65
						7530.00		-50.10	-13	-37.10
						3765.00	Horizontal	-52.80	-13	-39.80
						5647.50		-50.40	-13	-37.40
						7530.00		-50.13	-13	-37.13
			25	0	1912.50	3825.00	Vertical	-52.34	-13	-39.34
						5737.50		-49.97	-13	-36.97
						7650.00		-51.71	-13	-38.71
						3825.00	Horizontal	-52.08	-13	-39.08
						5737.50		-50.52	-13	-37.52
						7650.00		-51.09	-13	-38.09
		10	25	0	1855.00	3710.00	Vertical	-53.17	-13	-40.17
						5565.00		-49.53	-13	-36.53
						7420.00		-50.43	-13	-37.43
						3710.00	Horizontal	-53.14	-13	-40.14
						5565.00		-50.14	-13	-37.14
						7420.00		-50.56	-13	-37.56
			25	0	1882.50	3765.00	Vertical	-52.60	-13	-39.60
						5647.50		-49.82	-13	-36.82
						7530.00		-51.68	-13	-38.68
						3765.00	Horizontal	-52.71	-13	-39.71
						5647.50		-51.15	-13	-38.15
						7530.00		-49.12	-13	-36.12
			25	0	1910.00	3820.00	Vertical	-52.50	-13	-39.50
						5730.00		-49.87	-13	-36.87
						7640.00		-51.18	-13	-38.18
						3820.00	Horizontal	-53.69	-13	-40.69
						5730.00		-50.39	-13	-37.39
						7640.00		-51.54	-13	-38.54

Band	Modulation	Cell BW	No. of RB	RB Pos	Channel Frequency (MHz)	Measured Frequency (MHz	Antenna Polarization	Emission Level (dBm)	Limit (dBm)	Margin (dB)
25	QPSK	15	36	0	1857.50	3715.00	Vertical	-53.87	-13	-40.87
						5572.50		-51.38	-13	-38.38
						7430.00		-51.34	-13	-38.34
						3715.00	Horizontal	-54.12	-13	-41.12
						5572.50		-49.97	-13	-36.97
						7430.00		-51.22	-13	-38.22
			36	0	1882.50	3765.00	Vertical	-53.12	-13	-40.12
						5647.50		-50.43	-13	-37.43
						7530.00		-51.62	-13	-38.62
						3765.00	Horizontal	-53.68	-13	-40.68
						5647.50		-50.15	-13	-37.15
						7530.00		-51.86	-13	-38.86
			36	0	1907.50	3815.00	Vertical	-53.90	-13	-40.90
						5722.50		-50.69	-13	-37.69
						7630.00		-52.51	-13	-39.51
						3815.00	Horizontal	-53.37	-13	-40.37
						5722.50		-50.67	-13	-37.67
						7630.00		-51.49	-13	-38.49
		20	50	0	1860.00	3720.00	Vertical	-53.48	-13	-40.48
						5580.00		-50.13	-13	-37.13
						7440.00		-51.02	-13	-38.02
						3720.00	Horizontal	-52.96	-13	-39.96
						5580.00		-50.08	-13	-37.08
						7440.00		-50.64	-13	-37.64
			1	49	1882.50	3765.00	Vertical	-51.99	-13	-38.99
						5647.50		-49.91	-13	-36.91
						7530.00		-50.89	-13	-37.89
						3765.00	Horizontal	-53.55	-13	-40.55
						5647.50		-50.75	-13	-37.75
						7530.00		-51.32	-13	-38.32
			1	49	1905.00	3810.00	Vertical	-52.65	-13	-39.65
						5715.00		-50.44	-13	-37.44
						7620.00		-51.17	-13	-38.17
						3810.00	Horizontal	-52.94	-13	-39.94
						5715.00		-50.42	-13	-37.42
						7620.00		-50.62	-13	-37.62

Band	Modulation	Cell BW	No. of RB	RB Pos	Channel Frequency (MHz)	Measured Frequency (MHz	Antenna Polarization	Emission Level (dBm)	Limit (dBm)	Margin (dB)
25	16QAM	1.4	3	0	1850.70	3701.40	Vertical	-53.51	-13	-40.51
						5552.10		-49.63	-13	-36.63
						7402.80		-51.26	-13	-38.26
						3701.40	Horizontal	-53.52	-13	-40.52
						5552.10		-49.39	-13	-36.39
						7402.80		-50.81	-13	-37.81
			3	3	1882.50	3765.00	Vertical	-52.70	-13	-39.70
						5647.50		-49.03	-13	-36.03
						7530.00		-50.61	-13	-37.61
						3765.00	Horizontal	-52.55	-13	-39.55
						5647.50		-49.89	-13	-36.89
						7530.00		-50.43	-13	-37.43
			6	0	1914.30	3828.60	Vertical	-52.94	-13	-39.94
						5742.90		-47.91	-13	-34.91
						7657.20		-51.06	-13	-38.06
						3828.60	Horizontal	-52.20	-13	-39.20
						5742.90		-50.22	-13	-37.22
						7657.20		-50.69	-13	-37.69
		3	1	0	1851.50	3703.00	Vertical	-52.91	-13	-39.91
						5554.50		-50.33	-13	-37.33
						7406.00		-50.78	-13	-37.78
						3703.00	Horizontal	-53.39	-13	-40.39
						5554.50		-49.52	-13	-36.52
						7406.00		-51.31	-13	-38.31
			1	8	1882.50	3765.00	Vertical	-53.66	-13	-40.66
						5647.50		-50.44	-13	-37.44
						7530.00		-50.64	-13	-37.64
						3765.00	Horizontal	-52.75	-13	-39.75
						5647.50		-50.33	-13	-37.33
						7530.00		-50.66	-13	-37.66
			8	0	1913.50	3827.00	Vertical	-52.91	-13	-39.91
						5740.50		-50.17	-13	-37.17
						7654.00		-50.63	-13	-37.63
						3827.00	Horizontal	-52.84	-13	-39.84
						5740.50		-50.17	-13	-37.17
						7654.00		-51.28	-13	-38.28

Band	Modulation	Cell BW	No. of RB	RB Pos	Channel Frequency (MHz)	Measured Frequency (MHz	Antenna Polarization	Emission Level (dBm)	Limit (dBm)	Margin (dB)
25	16QAM	5	25	0	1852.50	3705.00	Vertical	-52.50	-13	-39.50
						5557.50		-50.51	-13	-37.51
						7410.00		-51.17	-13	-38.17
						3705.00	Horizontal	-53.80	-13	-40.80
						5557.50		-50.37	-13	-37.37
						7410.00		-51.48	-13	-38.48
			1	0	1882.50	3765.00	Vertical	-52.85	-13	-39.85
						5647.50		-47.18	-13	-34.18
						7530.00		-51.13	-13	-38.13
						3765.00	Horizontal	-53.83	-13	-40.83
						5647.50		-51.06	-13	-38.06
						7530.00		-51.70	-13	-38.70
			25	0	1912.50	3825.00	Vertical	-52.77	-13	-39.77
						5737.50		-48.45	-13	-35.45
						7650.00		-51.64	-13	-38.64
						3825.00	Horizontal	-52.71	-13	-39.71
						5737.50		-50.73	-13	-37.73
						7650.00		-50.94	-13	-37.94
		10	25	0	1855.00	3710.00	Vertical	-53.47	-13	-40.47
						5565.00		-49.95	-13	-36.95
						7420.00		-51.13	-13	-38.13
						3710.00	Horizontal	-53.50	-13	-40.50
						5565.00		-49.57	-13	-36.57
						7420.00		-51.48	-13	-38.48
			1	49	1882.50	3765.00	Vertical	-53.45	-13	-40.45
						5647.50		-50.00	-13	-37.00
						7530.00		-50.43	-13	-37.43
						3765.00	Horizontal	-53.81	-13	-40.81
						5647.50		-50.79	-13	-37.79
						7530.00		-50.86	-13	-37.86
			25	0	1910.00	3820.00	Vertical	-52.24	-13	-39.24
						5730.00		-49.71	-13	-36.71
						7640.00		-50.52	-13	-37.52
						3820.00	Horizontal	-50.38	-13	-37.38
						5730.00		-49.72	-13	-36.72
						7640.00		-52.29	-13	-39.29

Band	Modulation	Cell BW	No. of RB	RB Pos	Channel Frequency (MHz)	Measured Frequency (MHz	Antenna Polarization	Emission Level (dBm)	Limit (dBm)	Margin (dB)
25	16QAM	15	1	38	1857.50	3715.00	Vertical	-53.41	-13	-40.41
						5572.50		-50.05	-13	-37.05
						7430.00		-51.69	-13	-38.69
						3715.00	Horizontal	-53.95	-13	-40.95
						5572.50		-50.54	-13	-37.54
						7430.00		-50.83	-13	-37.83
			1	4	1882.50	3765.00	Vertical	-53.99	-13	-40.99
						5647.50		-51.29	-13	-38.29
						7530.00		-52.66	-13	-39.66
						3765.00	Horizontal	-52.93	-13	-39.93
						5647.50		-50.95	-13	-37.95
						7530.00		-51.55	-13	-38.55
			36	18	1907.50	3815.00	Vertical	-52.41	-13	-39.41
						5722.50		-49.87	-13	-36.87
						7630.00		-51.47	-13	-38.47
						3815.00	Horizontal	-53.61	-13	-40.61
						5722.50		-49.98	-13	-36.98
						7630.00		-51.49	-13	-38.49
		20	1	99	1860.00	3720.00	Vertical	-54.11	-13	-41.11
						5580.00		-50.93	-13	-37.93
						7440.00		-51.35	-13	-38.35
						3720.00	Horizontal	-53.46	-13	-40.46
						5580.00		-49.92	-13	-36.92
						7440.00		-51.21	-13	-38.21
			1	0	1882.50	3765.00	Vertical	-53.29	-13	-40.29
						5647.50		-50.01	-13	-37.01
						7530.00		-51.16	-13	-38.16
						3765.00	Horizontal	-53.67	-13	-40.67
						5647.50		-50.53	-13	-37.53
						7530.00		-49.93	-13	-36.93
			1	99	1905.00	3810.00	Vertical	-52.51	-13	-39.51
						5715.00		-50.34	-13	-37.34
						7620.00		-51.50	-13	-38.50
						3810.00	Horizontal	-52.82	-13	-39.82
						5715.00		-50.92	-13	-37.92
						7620.00		-51.57	-13	-38.57

Test Plots:

Channel 1850.7MHz-QPSK-CB1.4MHz-Vertical

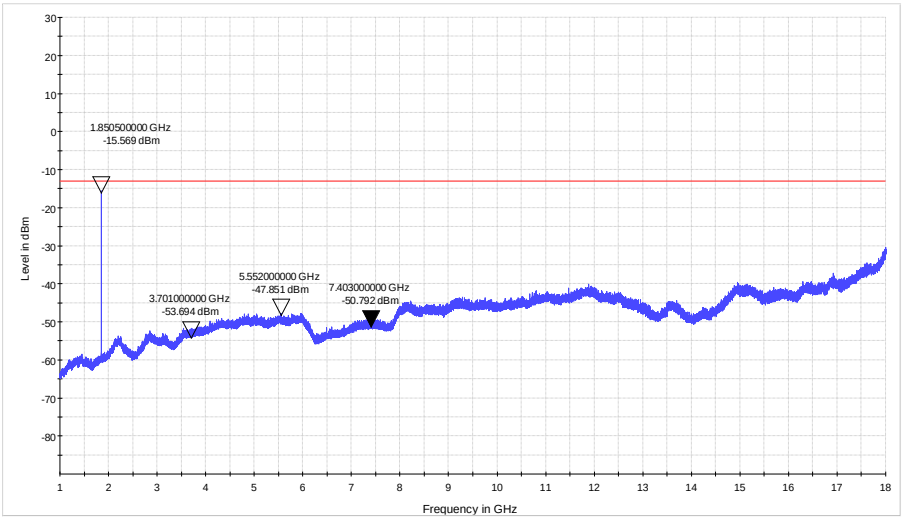

Channel 1850.7MHz-QPSK-CB1.4MHz-Horizontal

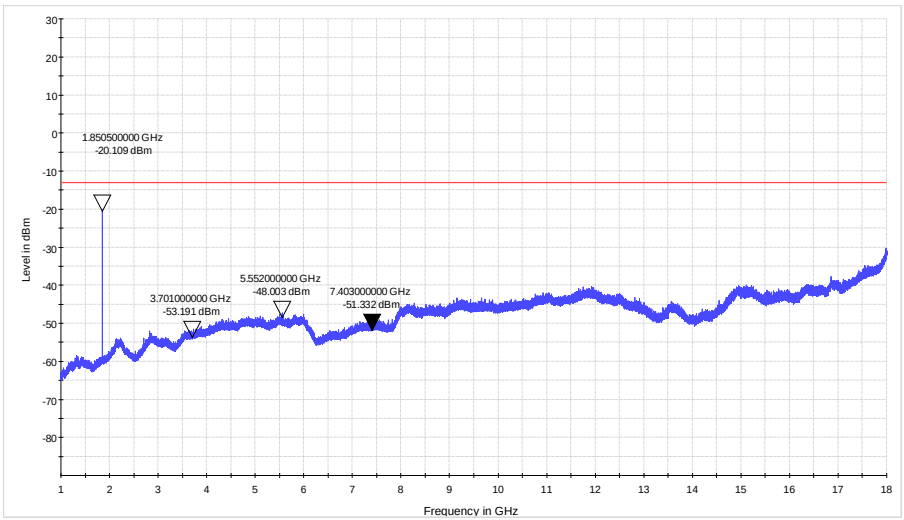

Channel 1850.7MHz-16QAM-CB1.4MHz-Vertical

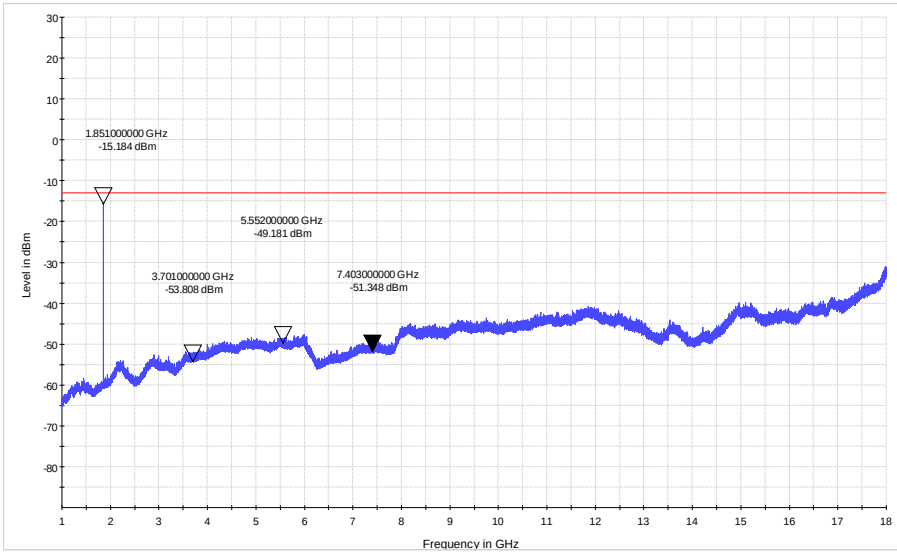

Channel 1850.7MHz-16QAM-CB1.4MHz-Horizontal

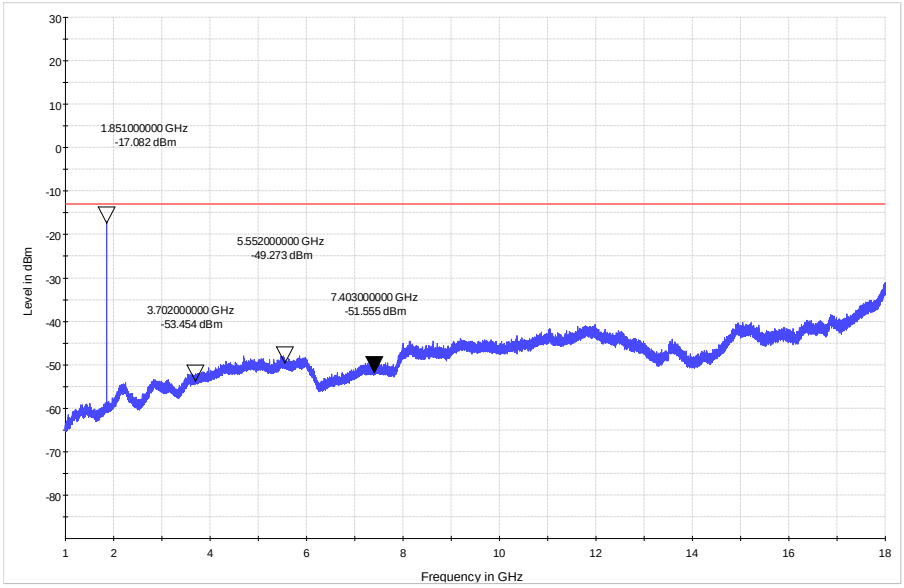

Test Results of WCDMA

Band	Channel Number	Channel Frequency (MHz)	Antenna Polarization	Measured Frequency (MHz)	Measured emission (dBm)	Limit (dBm)	Margin (dB)
2	9262	1852.4	Vertical	3704.80	-54.57	-13.00	-41.57
				5557.20	-50.08	-13.00	-37.08
				7409.60	-51.83	-13.00	-38.83
			Horizontal	3704.80	-53.86	-13.00	-40.86
				5557.20	-50.95	-13.00	-37.95
				7409.60	-51.56	-13.00	-38.56
	9400	1880	Vertical	3760.00	-53.36	-13.00	-40.36
				5640.00	-50.53	-13.00	-37.53
				7520.00	-51.70	-13.00	-38.70
			Horizontal	3760.00	-54.03	-13.00	-41.03
				5640.00	-51.07	-13.00	-38.07
				7520.00	-51.83	-13.00	-38.83
	9538	1907.6	Vertical	3815.20	-53.79	-13.00	-40.79
				5722.80	-50.56	-13.00	-37.56
				7630.40	-52.14	-13.00	-39.14
			Horizontal	3815.20	-53.87	-13.00	-40.87
				5722.80	-49.79	-13.00	-36.79
				7630.40	-52.49	-13.00	-39.49

Test Plots:

Channel Frequency: 1852.4MHz- Vertical Polarization

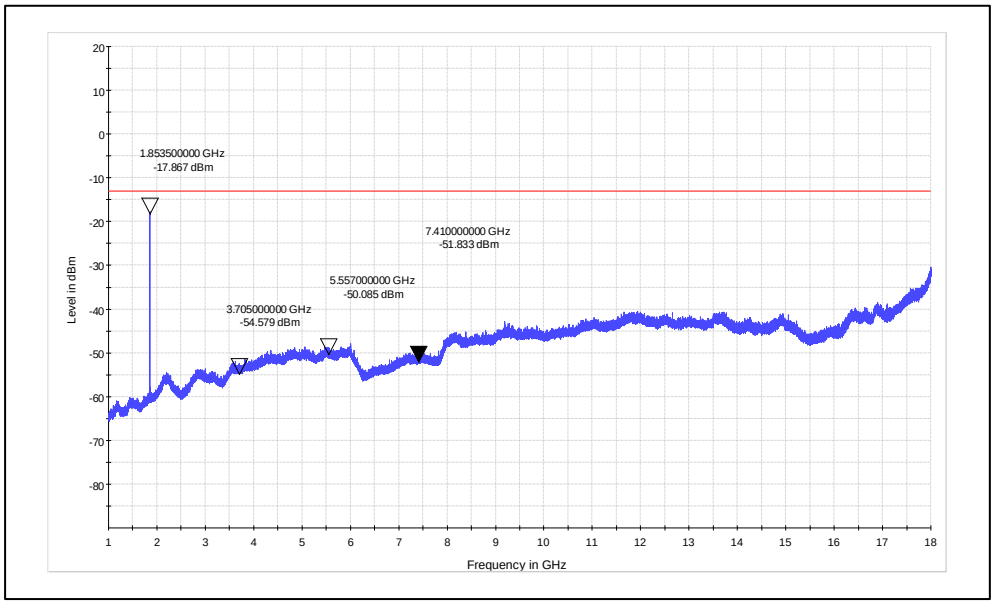

Channel Frequency: 1852.4MHz- Horizontal Polarization

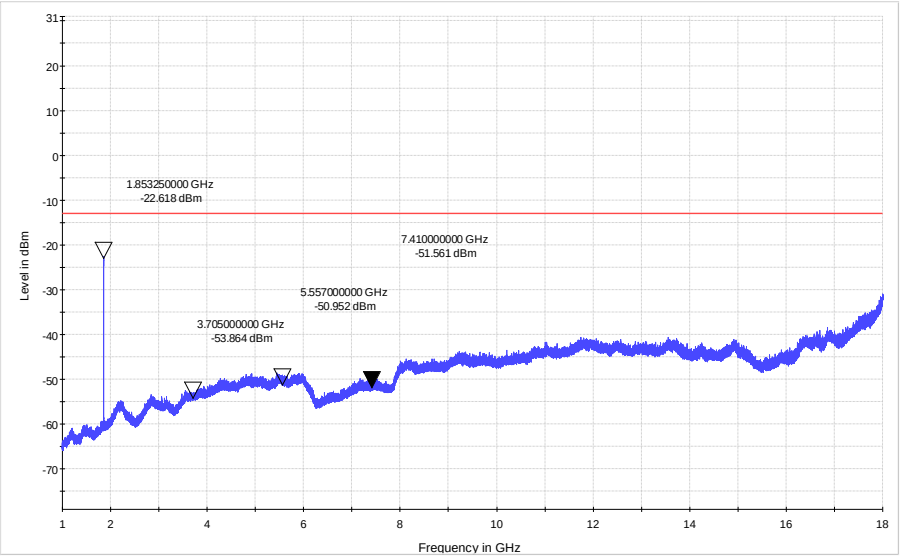

8 Conducted Spurious Emission Test on AC Power Line

Result ***Pass***

Test Specification	:	FCC Part 15 Section 15.207
Test Method	:	ANSI C 63.10-2013
Testing Location	:	Screened room
Measurement Bandwidth	:	9kHz
Frequency Range	:	150kHz – 30MHz
Supply Voltage	:	110VAC,60Hz
Test Method	:	Refer TEST METHODOLOGY

Limits of section 15.207

Frequency of emission (MHz)	Conducted limit (dBµV)	
	Quasi-peak (dBµV)	Average (dBµV)
0.15-0.5	66-56*	56-46*
0.5-5	56	46
5-30	60	50

* Decreases with the logarithm of the frequency

Test Conditions:

Normal Temperature = +24°C Voltage (V norm) = 110V AC (5.0V DC through AC to DC Adapter)
Relative Humidity = 64%

Test Result:

Power: 110V 60Hz_LINE

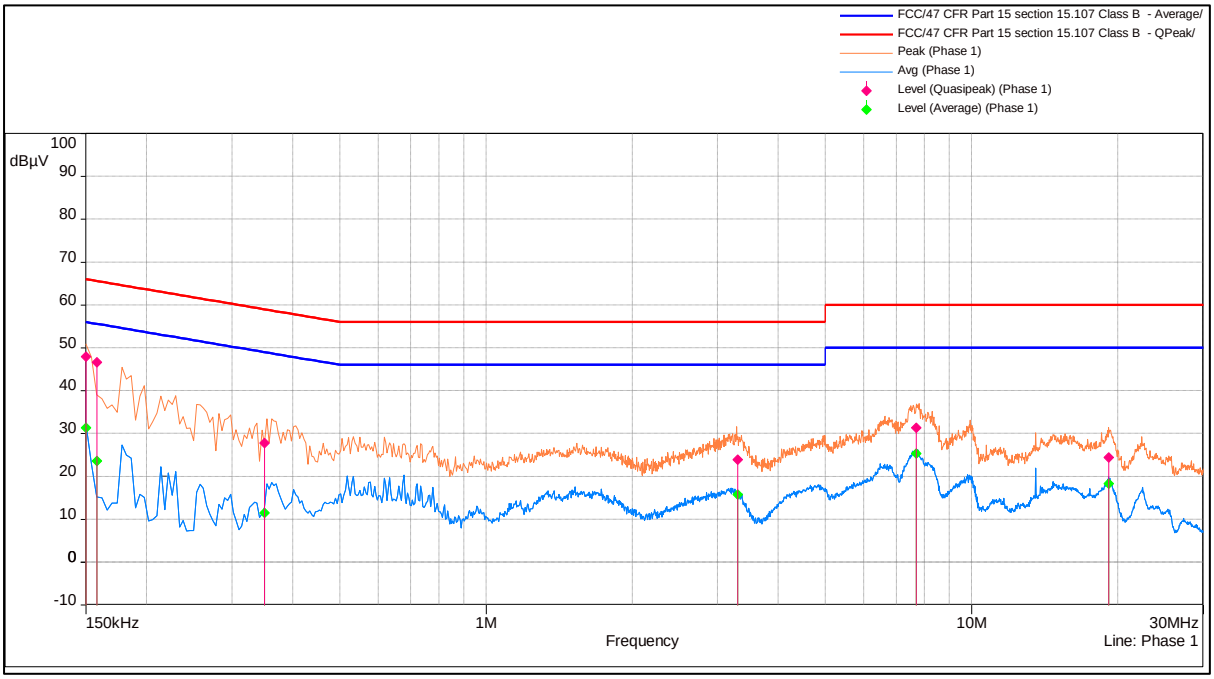

Line Graph

Quasi Peak:

Frequency (MHz)	Correction (dB)	Level (dBµV)	Limit (dBµV)	Margin (dB)	Comments
0.1518	19.89	47.93	66	-18.07	Pass
0.1564	19.89	46.59	65.57	-18.98	Pass
7.6907	20.06	31.33	60	-28.67	Pass
0.34805	19.86	27.83	58.96	-31.13	Pass
3.2941	20.03	23.92	56	-32.08	Pass
19.1598	20.28	24.45	60	-35.55	Pass

Line Table

Average:

Frequency (MHz)	Correction (dB)	Level (dBµV)	Limit (dBµV)	Margin (dB)	Comments
0.1518	19.89	31.4	56	-24.6	Pass
7.6907	20.06	25.31	50	-24.69	Pass
3.2941	20.03	15.78	46	-30.22	Pass
19.1598	20.28	18.37	50	-31.63	Pass
0.1564	19.89	23.61	55.57	-31.95	Pass
0.34805	19.86	11.47	48.96	-37.5	Pass

Line Table

Power: 110V 60Hz_NEUTRAL

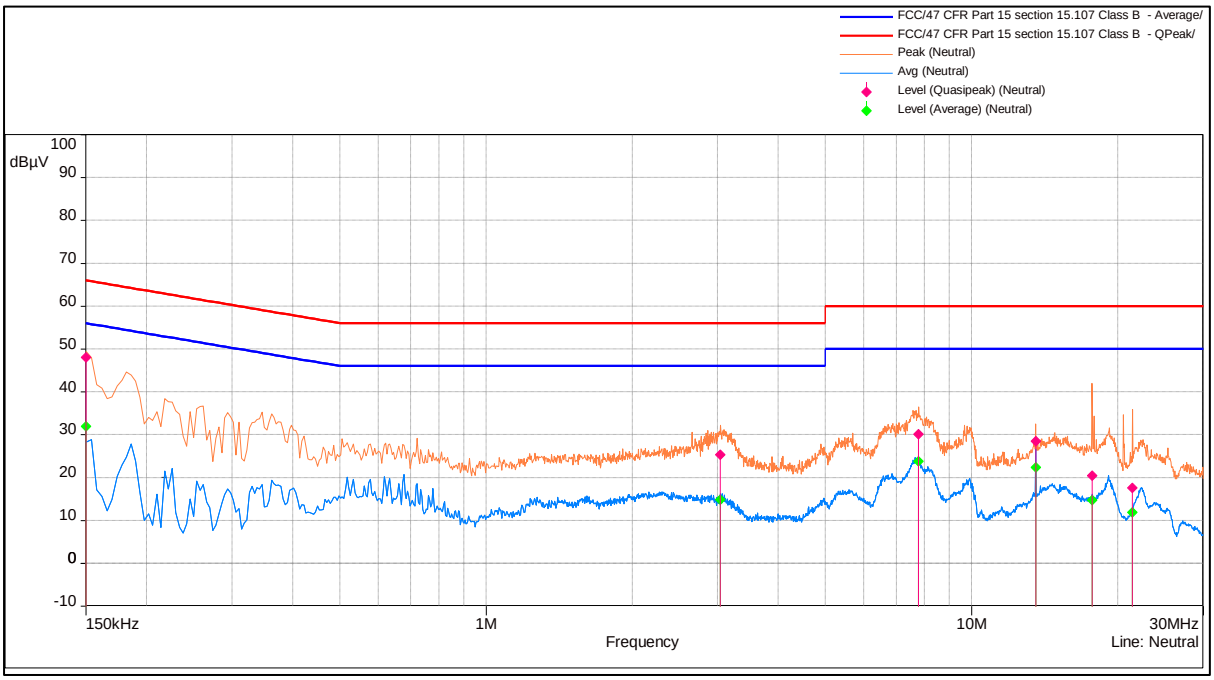

Neutral Graph

Quasi Peak:

Frequency (MHz)	Correction (dB)	Level (dBµV)	Limit (dBµV)	Margin (dB)	Comments
0.1518	19.87	48.03	66	-17.97	Pass
7.76495	19.88	30.16	60	-29.84	Pass
3.03305	19.85	25.34	56	-30.66	Pass
13.56065	19.99	28.54	60	-31.46	Pass
17.70565	20.08	20.45	60	-39.55	Pass
21.42275	20.09	17.6	60	-42.4	Pass

Neutral Table

Average:

Frequency (MHz)	Correction (dB)	Level (dBµV)	Limit (dBµV)	Margin (dB)	Comments
0.1518	19.87	31.97	56	-24.03	Pass
7.76495	19.88	23.83	50	-26.17	Pass
13.56065	19.99	22.36	50	-27.64	Pass
3.03305	19.85	14.9	46	-31.1	Pass
17.70565	20.08	14.72	50	-35.28	Pass
21.42275	20.09	11.86	50	-38.14	Pass

Neutral Table

9 LIST OF TABLES

Table 1: List of test and measurement instruments 7
Table 2: Instrument application Software versions 7
Table 3: Ratings and System Details as declared by Client* 8
Table 4: Antenna Gain 8
Table 5: Measurement Uncertainty 9
Table 6: List of Center frequencies 10

10 LIST OF FIGURES

Figure 1: Frequency Range 9 kHz- 30 MHz 14
Figure 2: Frequency Range 30 MHz – 200 MHz 14
Figure 3: Frequency Range 200 MHz - 1GHz 15
Figure 4: Frequency Range above 1 GHz 15

*****END OF TEST REPORT*****