Prüfbericht-Nr.: *Test report no.:*	**IN233SE0 001**	**Auftrags-Nr.:** *Order no.:*	146741356 0020	Seite 1 von 44 *Page 1 of 44*
Kunden-Referenz-Nr.: *Client reference no.:*	2026143	**Auftragsdatum** *Order date:*	2022-12-01	
Auftraggeber: *Client:*	Tessolve Semiconductor Pvt. Ltd Sy No-32, JP Nagar 24 th Main Road, 2nd Phase, BANGALORE - 560 078			
Prüfgegenstand: *Test item:*	Moter Automotive application Gateway			
Bezeichnung.: *Identification .:*	MT-V2001			
Auftrags-Inhalt: *Order content:*	Testing and issue of Test Report With Grant Certificate			
Prüfgrundlage: *Test specification:*	FCC Part 2 & Part 90, FCC Part15 SubpartC 15.207			
Wareneingangsdatum: *Date of sample receipt:*	2022-12-06			
Prüfmuster-Nr & Serien-Nr.: *Test sample no & serial no.:*	A003384947-001 Engineering Sample			
Prüfzeitraum: *Testing period:*	2022-12-06 - 2022-12-15			
Ort der Prüfung: *Place of testing:*	Wireless laboratory, Bangalore			
Prüflaboratorium: *Testing laboratory:*	TÜV Rheinland (India) Pvt.Ltd., 27/B, 2nd Cross, Electronic City Phase1 Bangalore -560 100, India FCC Test site registration number: 496599 ISED Test site registration number: 3466E-1			
Prüfergebnis*: *Test result*:*	Pass			

geprüft von: *tested by:*		**genehmigt von:** *authorized by:*	
Datum: *Date:* 2023-01-24	M.V. Naveen Kumar	**Ausstellatum:** *Issue date:* 2023-04-25	K.N
Stellung / *Position:*	**M.V.Naveen Kumar** **Engineer**	**Stellung** / *Position:*	**Madhu K.N** **Senior Engineer**
Sonstiges / *Other:*	FCC ID: 2A6PTMT2V1001		

Zustand des Prüfgegenstandes bei Anlieferung: *Condition of the test item at delivery:*	**Prüfmuster vollständig und unbeschädigt** ***Test item complete and undamaged***

* Legende:	1 = sehr gut	2 = gut	3 = befriedigend	4 = ausreichend	5 = mangelhaft
	P(ass) = entspricht o.g. Prüfgrundlage(n)		F(ail) = entspricht nicht o.g. Prüfgrundlage(n)	N/A = nicht anwendbar	N/T = nicht getestet
** Legend:*	*1 = very good*	*2 = good*	*3 = satisfactory*	*4 = sufficient*	*5 = poor*
	P(ass) = passed a.m. test specification(s)		*F(ail) = failed a.m. test specification(s)*	*N/A = not applicable*	*N/T = not tested*

Dieser Prüfbericht bezieht sich nur auf das o.g. Prüfmuster und darf ohne Genehmigung der Prüfstelle nicht auszugsweise vervielfältigt werden. Dieser Bericht berechtigt nicht zur Verwendung eines Prüfzeichens.
This test report only relates to the a. m. test sample. Without permission of the test center this test report is not permitted to be replicated in extracts. This test report does not entitle to carry any test mark.

1	Alle eingesetzten Prüfmittel waren zum angegebenen Prüfzeitraum gemäß eines festgelegten Kalibrierungsprogramms unseres Prüfhauses kalibriert. Sie entsprechen den in den Prüfprogrammen hinterlegten Anforderungen. Die Rückverfolgbarkeit der eingesetzten Prüfmittel ist durch die Einhaltung der Regelungen unseres Managementsystems gegeben. Detaillierte Informationen bezüglich Prüfkonditionen, Prüfequipment und Messunsicherheiten sind im Prüflabor vorhanden und können auf Wunsch bereitgestellt werden. *The equipment used during the specified testing period was calibrated according to our test laboratory calibration program. The equipment fulfils the requirements included in the relevant standards. The traceability of the test equipment used is ensured by compliance with the regulations of our management system.* *Detailed information regarding test conditions, equipment and measurement uncertainty is available in the test laboratory and could be provided on request.*
2	Wie vertraglich vereinbart, wurde dieses Dokument nur digital unterzeichnet. Der TÜV Rheinland hat nicht überprüft, welche rechtlichen oder sonstigen diesbezüglichen Anforderungen für dieses Dokument gelten. Diese Überprüfung liegt in der Verantwortung des Benutzers dieses Dokuments. Auf Verlangen des Kunden kann der TÜV Rheinland die Gültigkeit der digitalen Signatur durch ein gesondertes Dokument bestätigen. Diese Anfrage ist an unseren Vertrieb zu richten. Eine Umweltgebühr für einen solchen zusätzlichen Service wird erhoben. *As contractually agreed, this document has been signed digitally only. TUV Rheinland has not verified and unable to verify which legal or other pertaining requirements are applicable for this document. Such verification is within the responsibility of the user of this document. Upon request by its client, TUV Rheinland can confirm the validity of the digital signature by a separate document. Such request shall be addressed to our Sales department. An environmental fee for such additional service will be charged.*
3	Prüfklausel mit der Note * wurden an qualifizierte Unterauftragnehmer vergeben und sind unter der jeweiligen Prüfklausel des Berichts beschrieben. Abweichungen von Prüfspezifikation(en) oder Kundenanforderungen sind in der jeweiligen Prüfklausel im Bericht aufgeführt. *Test clauses with remark of * are subcontracted to qualified subcontractors and descripted under the respective test clause in the report.* *Deviations of testing specification(s) or customer requirements are listed in specific test clause in the report.*
4	Die Entscheidungsregel für Konformitätserklärungen in diesem Prüfbericht basiert auf der "Null-Grenzwert-Regel" und der "Einfachen Akzeptanz" gemäß ILAC G8:2019 und IEC Guide 115:2021, es sei denn, in der auf Seite 1 dieses Berichts genannten angewandten Norm ist etwas anderes festgelegt oder vom Kunden gewünscht. Dies bedeutet, dass die Messunsicherheit nicht berücksichtigt wird und daher auch nicht im Prüfbericht angegeben wird. *The decision rule for statements of conformity in this test report is based on the "Zero Guard Band Rule" and "Simple Acceptance" in accordance with ILAC G8:2019 and IEC Guide 115:2021, unless otherwise specified in the applied standard mentioned on Page 1 of this report or requested by the customer. This means that measurement uncertainty is not taken in account and hence also not declared in the test report.*

TEST SUMMARY

Test Item	FCC Clause	Results
Conducted Output Average Power and Peak to Average Power ratio	§2.1046	Pass
Equivalent Isotropic Radiated Power (EIRP) / Effective Radiated Power (ERP)	§2.1046 §90.542	Pass
Field strength of spurious radiation	§2.1053 §90.543(c) §90.543(f)	Pass
Frequency Stability	§2.1055, §90.213	N/T
Emission Bandwidth and Occupied Bandwidth	§2.1049 §2.1051 §90.210(n)	N/T
Band Edge	§2.1051 §90.543(e)(2)(3)	N/T
Spurious emissions at antenna terminals	§2.1051 §90.543(c) §90.543(f)	N/T
Conducted Emissions on A.C Power Lines	FCC 15.207	Pass

Note:
N/T: Not Tested since **Motor Automotive application Gateway** product uses certified RF modules with **FCC ID: XMR2021EM05G**, Hence the above mentioned test cases are excluded and which can be found in the module test report of respective FCC ID

Product	Applicant	FCC ID	Report No	Issued By	Grant Date
EM05-G	Quectel Wireless Solutions Company Limited	XMR2021EM05G	SHR/2021/3000701	SGS-CSTC Standards Technical Service Co., Ltd. Shenzhen Branch	2021/06/23

Product Category: Electronics Testing
Test Discipline: EMC Test Facility

REVISION HISTORY OF THIS REPORT

Report Number	Version	Description	Issue date
IN233SE0 001	01	Initial issue of report	2023-04-25

Table of Contents

1 GENERAL REMARKS 6
1.1 Attachments 6
2 TEST SITES 7
2.1 Testing Facilities 7
2.2 List of Test and Measurement Instruments 7
3 GENERAL PRODUCT INFORMATION 8
3.1 Product Function and Intended Use 8
3.2 Ratings and System Details of Equipment under Test 8
3.3 Measurement Uncertainty 9
4 TEST SET-UP AND OPERATION MODE 10
4.1 Principle of Configuration Selection 10
4.2 UUT Operation and Software 10
4.3 Special Accessories and Auxiliary Equipment 10
4.4 Countermeasures to achieve EMC Compliance 10
4.5 List of frequencies 10
4.6 Report references 10
5 Operational Description of the product 11
6 TEST METHODOLOGY 12
6.1 Conducted Spurious Emission Test on AC Power Line 12
6.1.1 Test Setup Configuration 12
6.2 Radiated Emission Test 13
6.2.1 Test Setup Configuration 13
7 TEST RESULTS 17
7.1 PEAK – AVERAGE RATIO 17
7.2 EFFECTIVE (ISOTROPIC) RADIATED POWER 24
7.3 Field Strength of Spurious Radiation 31
8 Conducted Spurious Emission Test on AC Power Line 41
9 LIST OF TABLES 44
10 LIST OF FIGURES 44

1 GENERAL REMARKS

1.1 Attachments

All attachments are part of this test report and are issued in separate document

1: TEST SETUP PHOTOS

2: EUT EXTERNAL PHOTOS

3: EUT INTERNAL PHOTOS

4: FCC LABEL AND LABEL LOCATION

5: BLOCK DIAGRAM

6: SPECIFICATION OF EUT

7: SCHEMATIC DIAGRAM

8: BILL OF MATERIAL

9: USER MANUAL

10: MAXIMUM PERMISSIBLE EXPOSURE INFORMATION

2 TEST SITES

2.1 Testing Facilities

1. TÜV Rheinland (India) Pvt.Ltd.,
   27/B, 2nd Cross,
   ElectronicCityPhase1
   Bangalore – 560 100,
   India

2. TUV Rheinland (India) Private Limited
   108 , Beside ISBR Business School,
   Electronic city Phase I
   Bangalore - 560 100.
   India

2.2 List of Test and Measurement Instruments

Table 1: List of test and measurement instruments

Equipment	Manufacturer	Model Name	Serial Number	Firmware Versions	Calibration Due Date	Periodicity	Test Facility
Radio Communication tester	Rohde & Schwarz	CMW 500	158345	-	20.08.2023	Yearly	Radiated Spurious Emission
EMI Receiver	Rohde & Schwarz	ESW 44	101732	4.73 SP5	04.08.2023	Yearly	
Active loop antenna	Frankonia	LAX-10	LAX-10-800	-	31.01.2023	Yearly	
Baloon and Biconical Antenna	Schwarzbeck mess-elektronik	VHBB-9124 / BBA-9106	01028	-	03.02.2023	Yearly	
Log-Periodic Antenna	Schwarzbeck mess-elektronik	VUSLP-9111B	9111B-111	-	26.01.2023	Yearly	
Horn Antenna	Schwarzbeck	BBHA 9120 D	9120D-01944	-	11.10.2023	Yearly	
EMI Test Receiver	Rohde & Schwarz	ESW44	101773	1.72.SP1	12.02.2023	Yearly	
Semi Anechoic Chamber	Frankonia	-	-	-	-	-	
Fully Anechoic Chamber	Albatross	-	-	-	-	-	
EMI Receiver	Rohde & Schwarz	ESR7	101133	3.48 SP3	22.07.2023	Yearly	Conducted AC Power line Test
Line Impedance Stabilization Network	Rohde & Schwarz	ENV 216	101434	-	11.04.2023	Yearly	
Pulse Limiter	Rohde & Schwarz	ESH3-Z2	100811	-	12.07.2023	Yearly	

Table 2: Instrument application Software versions

SL. No.	Test Type	Application software	Version
1	Radiated spurious emission measurement in 10m-SAC	EMC 32	10.60.00
2	Radiated spurious emission measurement in FAC	EMC 32	10.60.20

3 GENERAL PRODUCT INFORMATION

3.1 Product Function and Intended Use

This SoM is based on a ICEBERG100_SOM high-performance vehicle network processor that combine controller area network (CAN), local interconnect network (LIN), and FlexRay networking with high-data-rate Ethernet networking.

3.2 Ratings and System Details of Equipment under Test

Table 3: Ratings and System Details as declared by Client*

Radio Protocol	LTE				
LTE E-UTRA operating bands	Band	Bandwidth (MHz)	UL Frequency (MHz)	DL Frequency (MHz)	Modulation
	26	1.4, 3, 5, 10	814 - 824	859 - 869	QPSK, 16QAM
	14	5	788 - 798	758 - 768	QPSK, 16QAM
Transmitted Power for LTE (dBm)	Band	Power Class	Max. Conducted Average. Output Power		
	26	Power Class 3: 23dBm	24.20dBm@ 10MHz,16QAM		
	14	Power Class 3: 23dBm	23.52dBm@ 5MHz, QPSK		
Antenna Type	Main Antenna - I-Bar Patch Antenna Diversity Antenna - I-Bar Patch Antenna				
Number of Antenna	Main – 1 & Diversity – 1				
Antenna Gain	Refer Table 4				
Supply Voltage to Product	12VDC through AC to DC Adapter				
Environmental conditions Storage	–40°C to +70°C				
Environmental conditions Operating	–40°C to +70°C				
EUT Dimension (L x W x H**)**	188.1 X 130.5 X 34.12 (mm)				

Antenna Type	Frequency Range (MHz)	Antenna Gain (dBi)
Main Antenna - Diversity Antenna	700MHz	3

Table 4: Antenna Gain

***Disclaimer:**
The information/data is supplied by the client and the same is considered to arrive at the final value.
Any changes made apart from the specified specification, can directly impact on the tests results. Refer the products user manual for more details.

3.3 Measurement Uncertainty

Reported uncertainties represent expanded uncertainties expressed at approximately the 95% confidence level using a coverage factor of *k* = 2

Table 5: Measurement Uncertainty

Parameter	Uncertainty
Occupied Channel Bandwidth	±5 %
RF output power, conducted	±1.5 dB
Power Spectral Density, conducted	±3 dB
Unwanted Emissions, conducted	±3 dB
All emissions, radiated	±6 dB
Temperature	±3 ℃
Supply Voltages	±3 %
Time	±5 %

4 TEST SET-UP AND OPERATION MODE

4.1 Principle of Configuration Selection

Transmission was enabled with highest possible duty cycle on low, mid and high channels

4.2 UUT Operation and Software

Hardware Name & vesion : moter-1.12.0-mtu-att.rootfs.sdcard.gz
Software Name & version : Moter_V2_SOM_CB

4.3 Special Accessories and Auxiliary Equipment

-None

4.4 Countermeasures to achieve EMC Compliance

- None

4.5 List of frequencies

Table 6: List of Center frequencies

Protocol	Band	UL Frequency (MHz)	DL Frequency (MHz)
LTE	26	814MHz to 824MHz	859MHz to 869MHz
	14	788MHz to 798MHz	758MHz to 768MHz

Note:

TUV Sample Identification number: A003384947-001 – Radiated test Sample & Conducted test Sample

4.6 Report references

Note: has multiple protocols. All the supported wireless protocols and their respective test results are issued in saparate test reports, following table lists the report numbers.

Radio Protocol	Report Number
RF test report for FCC Part 22	IN23RLHX 001
RF test report for FCC Part 24	IN23WWR8 001
RF test report for FCC Part 27	IN2393NU 001
RF test report for FCC Part 90→ This Report	**IN233SE0 001**

5 Operational Description of the product

The S32G2 SOM based Gateway application unit is connected inside the Car. The Unit is powered on through the OBD connector by drawing the voltage of 12V, when the car is started. Once the unit is powered on it receives the data from CAN and sends it to the Cloud through the 4G module.

6 TEST METHODOLOGY

6.1 Conducted Spurious Emission Test on AC Power Line

Measured levels of ac power-line conducted emission across the 50Ω LISN port (to which the EUT is connected). All emission voltage and current measurements shall be made on each current-carrying conductor at the plug end of the EUT power cord by the use of mating plugs and receptacles on the LISN, if used. Equipment shall be tested with power cords that are normally supplied or recommended by the manufacturer and that have electrical and shielding characteristics that are the same as those cords normally supplied or recommended by the manufacturer.

The device is placed on the test table, raised 80cm above the reference ground plane. The vertical conducting plane is located 40cm to the rear of the device. AC Conducted emission measurement is made over frequency range from 150kHz to 30MHz, this measurement was performed with EUT powered by an AC adaptor with 110V AC 60Hz supply.

6.1.1 Test Setup Configuration

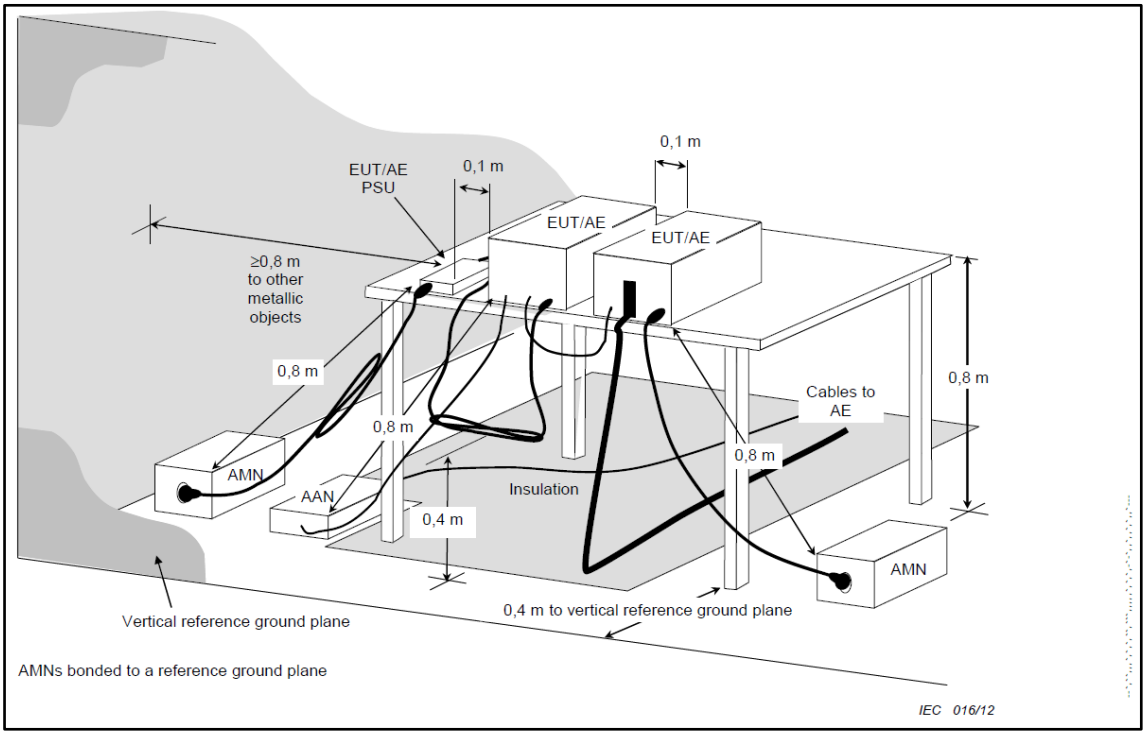

6.2 Radiated Emission Test

Frequency Range 9 kHz - 30 MHz

Test performed as per ANSI C63.4-2014 section 8.3

The loop Antenna was placed at 1m above the ground plane & EUT is 3 meters far from the measuring antenna. With 3m measurement distance, correction data were applied to the measured results. The test arrangement, measuring antenna guidelines and operational configurations in 8.2.1 and 8.2.2, shall be followed. The measurement antenna shall be positioned with its plane perpendicular to the ground at the Specified distance, when perpendicular to the ground plane, the lowest height of the magnetic antenna shall be 1 m above the ground and shall be positioned at the specified distance from the EUT. EUT & its associates are placed on non-conducting table of 0.8m height which is placed on the turn table, For each measurement antenna alignment, the EUT shall be rotated through 0° to 360° on a turntable. The report shall list worst case emission results, for each of the parallel & perpendicular orientations.

6.2.1 Test Setup Configuration

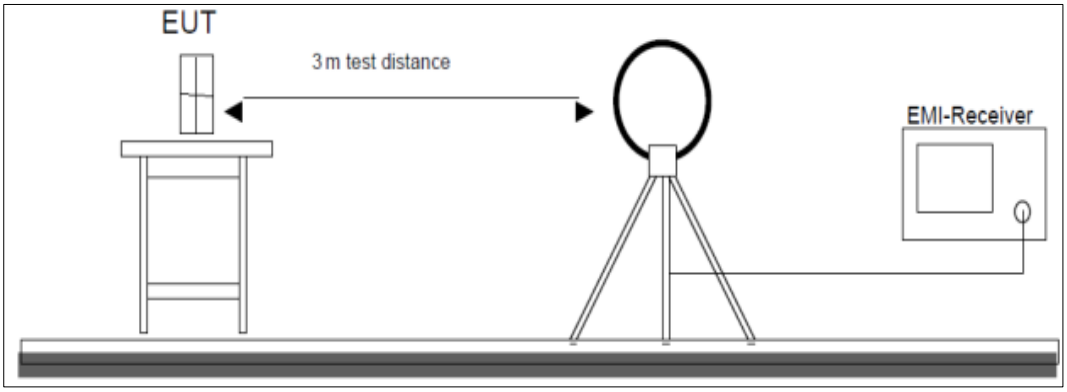

Figure 1: Frequency Range 9 kHz- 30 MHz

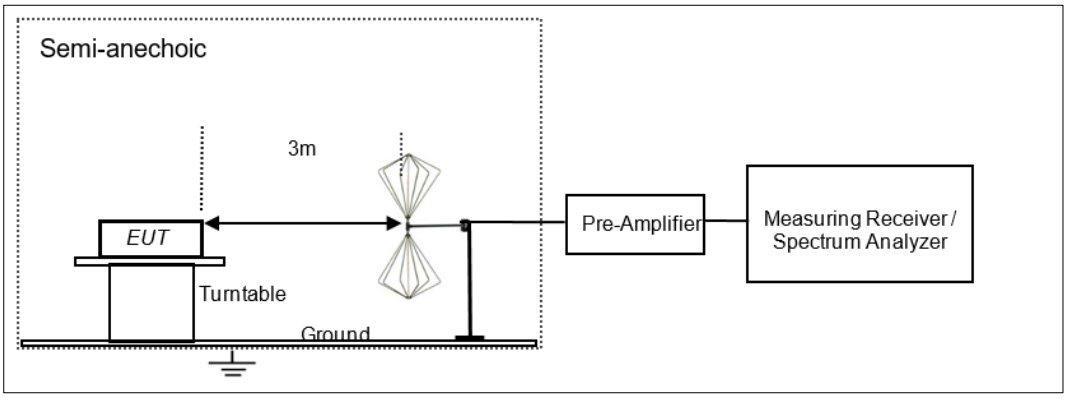

Figure 2: Frequency Range 30 MHz – 200 MHz

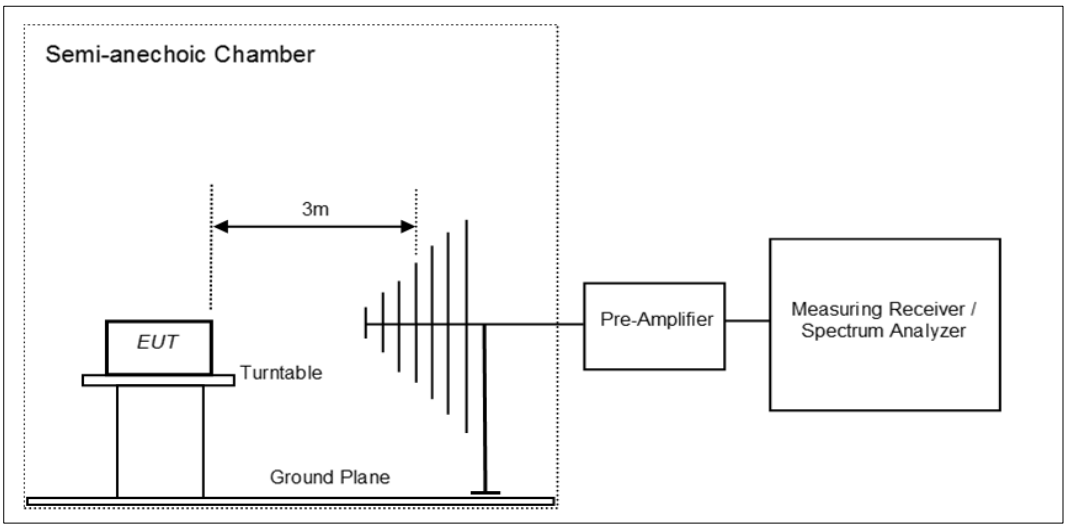

Figure 3: Frequency Range 200 MHz - 1GHz

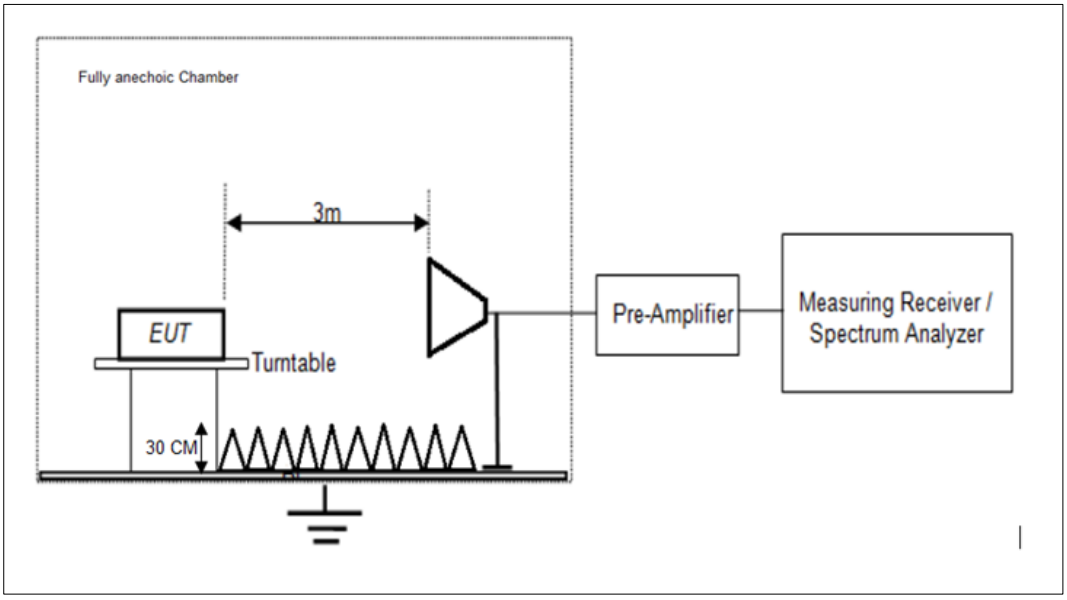

Figure 4: Frequency Range above 1 GHz

Frequency Range 30MHz to 10th harmonics of the highest fundamental frequency

Test performed as per ANSI C63.26-2015

Radiated spurious emission test are performed as below.

All the radiated emission measurements are performed in accordance with common requirement specified in 5.5.2 and Pre-test site path loss correction factors are used to adjust the EUT emission data in place of two step substitution method (as defined in Annex B of ANSI C63.26-2015).

The equipment under test is placed on non-conductive table at 3m away from the receive antenna in accordance with above mentioned standard. Turn table is rotated through 360 degree, and receiver antenna height is varied in order to determine the level of maximum emission. The maximum emission level and position of the maximized emission is recorded with use of spectrum analyzer.

Using pre-test site path loss to determine EUT emission power:

1) EUT emission powers are calculated using the following equation:

Emission Power = EUT_{Prec} [dBm EIRP/ ERP] + P_L [dB]

where

EUT_{Prec} = power of the emission measured at the test receiver during EUT measurements.

PL = path loss determined on the frequency of the EUT emission or calculated using linear interpolation between site characterization frequencies.

2) This is the level to be compared against the regulatory limit as it is the emission power referenced back to the EUT on the test site.

Test site-up for radiated measurements

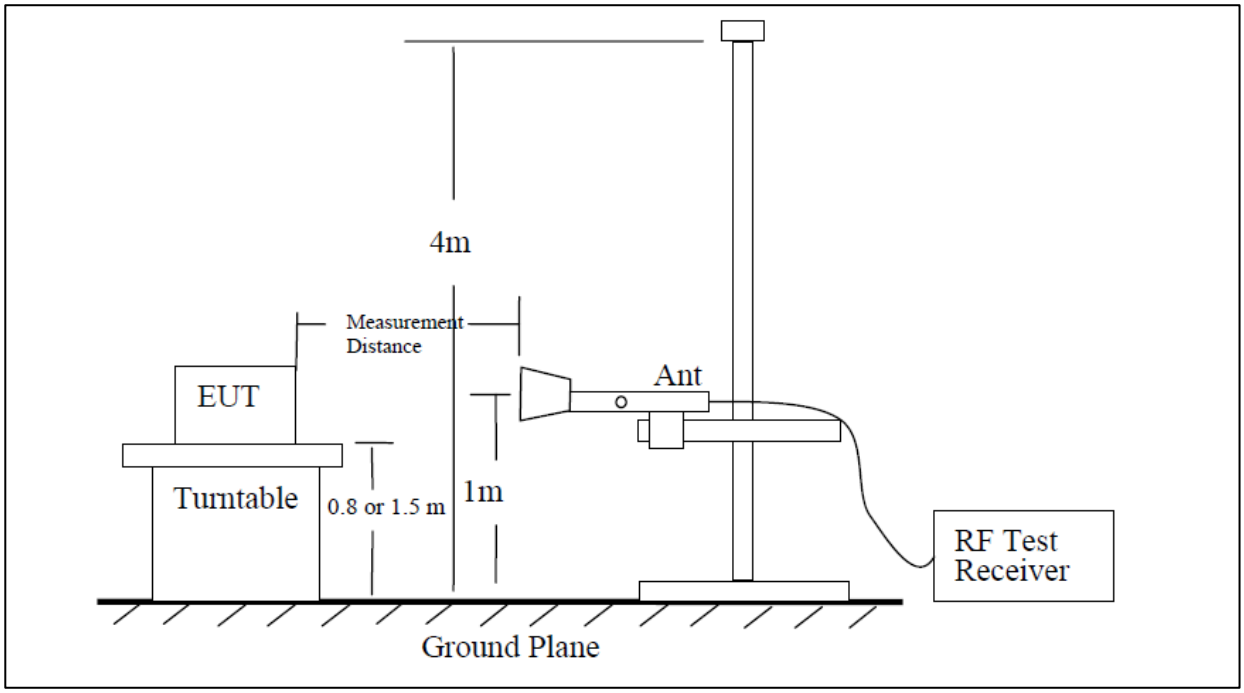

Substitution method set-up for radiated emission

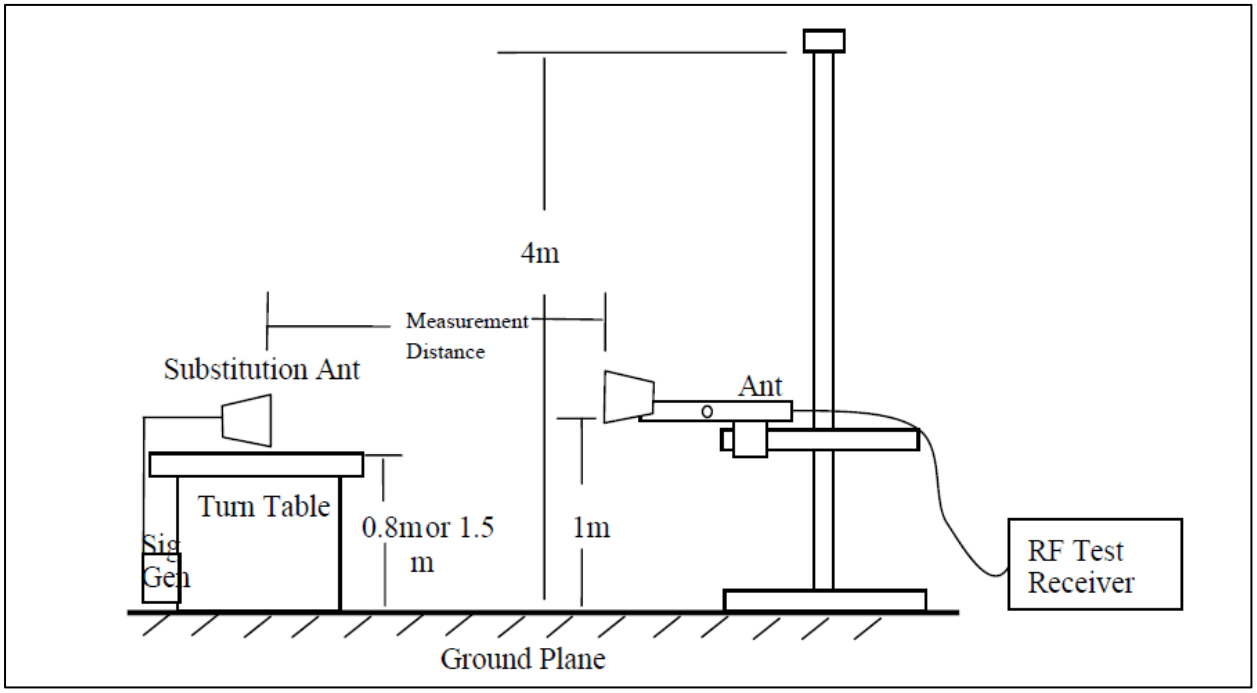

7 TEST RESULTS

7.1 PEAK – AVERAGE RATIO

Result ***Pass***

Specification	FCC Part §2.1046
Test Method / Procedure	ANSI C63.26-2015 As per subclause 5 in 971168 D01 Power Meas License Digital Systems v03r01
Detector Function	Peak/Average
Requirement	PAPR ≤ 13dBm

Test Setup:

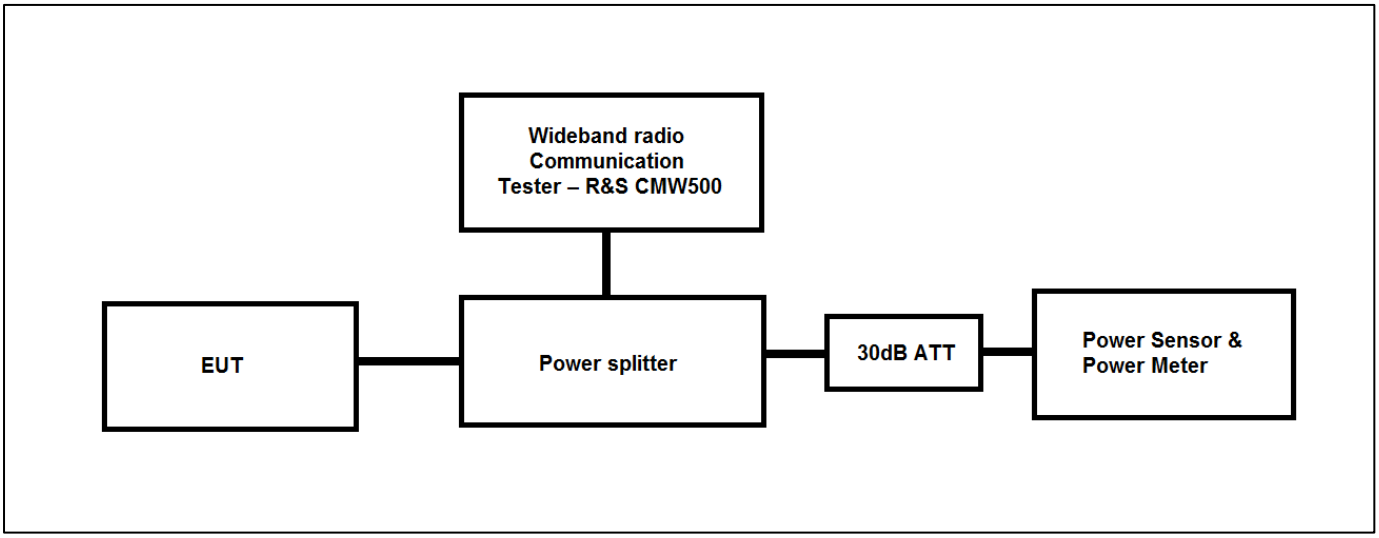

Environmental Conditions:

Temperature: +22.5°C **Voltage:** 12VDC through AC-DC Adapter **Relative Humidity:** 62%

KDB Guidelines applied:

Measurements were made as per section 5.2.4 in KDB 971168 D01 Power Meas License Digital Systems v03r01

Test results:

Note:

1 All the losses are included during measurement and final values are mentioned in the test report.
2. Total Average Output power (dBm) = Measured Average power (dBm) + Attenuator factor (30dB) + Power Splitter (6 dB) + Cable loss (1dB)
3. PAPR (dB) = Measured Peak Power(dBm) – Measured Average Power(dBm)

PAPR Test Results

Cellular Band	Channel Bandwidth (MHz)	Modulation Technique	Channel Number	RB Pos/RB allocation	PAPR (dBm)	Limit (dBm)
14	5MHz	QPSK	23305	1RB#12	4.34	≤13
	5MHz	QPSK	23305	1RB#24	4.43	≤13
	5MHz	QPSK	23305	1RB#0	4.44	≤13
	5MHz	QPSK	23305	12RB#0	5.15	≤13
	5MHz	QPSK	23305	12RB#6	5.11	≤13
	5MHz	QPSK	23305	12RB#13	5.21	≤13
	5MHz	QPSK	23305	25RB#0	5.7	≤13
	5MHz	QPSK	23330	1RB#0	4.79	≤13
	5MHz	QPSK	23330	1RB#12	4.72	≤13
	5MHz	QPSK	23330	1RB#24	4.71	≤13
	5MHz	QPSK	23330	12RB#0	5.2	≤13
	5MHz	QPSK	23330	12RB#6	5.1	≤13
	5MHz	QPSK	23330	12RB#13	5.14	≤13
	5MHz	QPSK	23330	25RB#0	5.7	≤13
	5MHz	QPSK	23355	1RB#24	4.58	≤13
	5MHz	QPSK	23355	1RB#0	4.74	≤13
	5MHz	QPSK	23355	1RB#12	4.63	≤13
	5MHz	QPSK	23355	12RB#6	5.05	≤13
	5MHz	QPSK	23355	12RB#0	5.15	≤13
	5MHz	QPSK	23355	12RB#13	5.04	≤13
	5MHz	QPSK	23355	25RB#0	5.38	≤13
	5MHz	16QAM	23305	1RB#12	5.13	≤13
	5MHz	16QAM	23305	1RB#0	5.25	≤13
	5MHz	16QAM	23305	1RB#24	5.23	≤13
	5MHz	16QAM	23305	12RB#13	5.92	≤13
	5MHz	16QAM	23305	12RB#6	5.93	≤13
	5MHz	16QAM	23305	12RB#0	5.73	≤13
	5MHz	16QAM	23305	25RB#0	6.71	≤13
	5MHz	16QAM	23330	1RB#0	5.69	≤13
	5MHz	16QAM	23330	1RB#12	5.57	≤13
	5MHz	16QAM	23330	1RB#24	5.58	≤13
	5MHz	16QAM	23330	12RB#0	6.03	≤13
	5MHz	16QAM	23330	12RB#6	5.91	≤13
	5MHz	16QAM	23330	12RB#13	6.05	≤13
	5MHz	16QAM	23330	25RB#0	6.34	≤13
	5MHz	16QAM	23355	1RB#0	5.61	≤13
	5MHz	16QAM	23355	1RB#12	5.55	≤13
	5MHz	16QAM	23355	1RB#24	5.5	≤13
	5MHz	16QAM	23355	12RB#13	5.97	≤13
	5MHz	16QAM	23355	12RB#0	6.07	≤13
	5MHz	16QAM	23355	12RB#6	5.88	≤13
	5MHz	16QAM	23355	25RB#0	6.29	≤13

Cellular Band	Channel Bandwidth (MHz)	Modulation Technique	Channel Number	RB Pos/RB allocation	PAPR (dBm)	Limit (dBm)
14	10MHz	QPSK	23330	1RB#49	4.78	≤13
	10MHz	QPSK	23330	1RB#24	4.78	≤13
	10MHz	QPSK	23330	1RB#0	4.83	≤13
	10MHz	QPSK	23330	25RB#0	5.21	≤13
	10MHz	QPSK	23330	25RB#12	5.16	≤13
	10MHz	QPSK	23330	25RB#25	5.15	≤13
	10MHz	QPSK	23330	50RB#0	5.56	≤13
	10MHz	16QAM	23330	1RB#49	5.64	≤13
	10MHz	16QAM	23330	1RB#0	5.87	≤13
	10MHz	16QAM	23330	1RB#24	5.74	≤13
	10MHz	16QAM	23330	25RB#0	6.31	≤13
	10MHz	16QAM	23330	25RB#12	6.11	≤13
	10MHz	16QAM	23330	25RB#25	6.11	≤13
	10MHz	16QAM	23330	50RB#0	7.1	≤13

Cellular Band	Channel Bandwidth (MHz)	Modulation Technique	Channel Number	RB Pos/RB allocation	PAPR (dB)	Limit (dBm)
Band26	1.4MHz	QPSK	26697	1RB#0	4.76	≤13
			26697	1RB#2	4.45	≤13
			26697	1RB#5	4.47	≤13
			26697	3RB#0	5.04	≤13
			26697	3RB#1	4.87	≤13
			26697	3RB#3	4.97	≤13
			26697	6RB#0	5.81	≤13
			26915	1RB#0	4.75	≤13
			26915	1RB#5	4.73	≤13
			26915	1RB#2	4.57	≤13
			26915	3RB#0	4.75	≤13
			26915	3RB#1	4.72	≤13
			26915	3RB#3	4.78	≤13
			26915	6RB#0	5.48	≤13
			27033	1RB#5	4.68	≤13
			27033	1RB#0	4.65	≤13
			27033	1RB#2	4.50	≤13
			27033	3RB#0	4.88	≤13
			27033	3RB#1	4.85	≤13
			27033	3RB#3	4.93	≤13
			27033	6RB#0	5.46	≤13
Band26	1.4MHz	16QAM	26697	1RB#0	5.64	≤13
			26697	1RB#2	5.40	≤13
			26697	1RB#5	5.62	≤13
			26697	3RB#1	5.74	≤13
			26697	3RB#0	5.82	≤13
			26697	3RB#3	5.81	≤13
			26697	6RB#0	6.07	≤13
			26915	1RB#0	5.26	≤13
			26915	1RB#2	5.19	≤13
			26915	1RB#5	5.30	≤13
			26915	3RB#3	5.67	≤13
			26915	3RB#0	5.66	≤13
			26915	3RB#1	5.56	≤13
			26915	6RB#0	6.40	≤13
			27033	1RB#2	5.48	≤13
			27033	1RB#0	5.70	≤13
			27033	1RB#5	5.60	≤13
			27033	3RB#0	5.58	≤13
			27033	3RB#1	5.56	≤13
			27033	3RB#3	5.66	≤13
			27033	6RB#0	6.00	≤13

Cellular Band	Channel Bandwidth (MHz)	Modulation Technique	Channel Number	RB Pos/RB allocation	PAPR (dB)	Limit (dBm)
Band26	3MHz	QPSK	26705	1RB#8	4.65	≤13
			26705	1RB#14	4.83	≤13
			26705	1RB#0	4.78	≤13
			26705	8RB#0	5.09	≤13
			26705	8RB#4	5.14	≤13
			26705	8RB#7	5.29	≤13
			26705	15RB#0	5.85	≤13
			26915	1RB#0	4.73	≤13
			26915	1RB#14	4.73	≤13
			26915	1RB#8	4.54	≤13
			26915	8RB#7	4.98	≤13
			26915	8RB#0	5.01	≤13
			26915	8RB#4	4.90	≤13
			26915	15RB#0	5.42	≤13
			27025	1RB#8	4.55	≤13
			27025	1RB#0	4.68	≤13
			27025	1RB#14	4.68	≤13
			27025	8RB#0	4.98	≤13
			27025	8RB#7	5.05	≤13
			27025	8RB#4	4.96	≤13
			27025	15RB#0	5.39	≤13
Band26	3MHz	16QAM	26705	1RB#14	5.83	≤13
			26705	1RB#0	5.80	≤13
			26705	1RB#8	5.70	≤13
			26705	8RB#7	5.93	≤13
			26705	8RB#4	5.82	≤13
			26705	8RB#0	5.88	≤13
			26705	15RB#0	6.47	≤13
			26915	1RB#14	5.39	≤13
			26915	1RB#0	5.27	≤13
			26915	1RB#8	5.19	≤13
			26915	8RB#7	5.93	≤13
			26915	8RB#0	5.89	≤13
			26915	8RB#4	5.74	≤13
			26915	15RB#0	6.12	≤13
			27025	1RB#8	5.55	≤13
			27025	1RB#0	5.61	≤13
			27025	1RB#14	5.69	≤13
			27025	8RB#0	5.77	≤13
			27025	8RB#4	5.75	≤13
			27025	8RB#7	5.82	≤13
			27025	15RB#0	6.16	≤13

Band	Bandwidth	Modulation	Channel Frequency (MHz)	RB Pos/RB Location	PAPR (dBm)	Limit (dBm)
Band26	5MHz	QPSK	26715	1RB#0	4.62	≤13
		QPSK	26715	1RB#12	4.59	≤13
		QPSK	26715	1RB#24	4.66	≤13
		QPSK	26715	12RB#0	5.08	≤13
		QPSK	26715	12RB#6	6.76	≤13
		QPSK	26715	12RB#13	5.02	≤13
		QPSK	26715	25RB#0	5.51	≤13
		QPSK	26915	1RB#0	4.73	≤13
		QPSK	26915	1RB#24	4.56	≤13
		QPSK	26915	1RB#12	4.49	≤13
		QPSK	26915	12RB#0	4.99	≤13
		QPSK	26915	12RB#6	4.88	≤13
		QPSK	26915	12RB#13	4.96	≤13
		QPSK	26915	25RB#0	5.23	≤13
		QPSK	27015	1RB#24	4.52	≤13
		QPSK	27015	1RB#0	4.85	≤13
		QPSK	27015	1RB#12	4.51	≤13
		QPSK	27015	12RB#0	4.95	≤13
		QPSK	27015	12RB#6	4.91	≤13
		QPSK	27015	12RB#13	4.92	≤13
		QPSK	27015	25RB#0	5.51	≤13
Band26	5MHz	16QAM	26715	1RB#0	5.80	≤13
		16QAM	26715	1RB#12	5.45	≤13
		16QAM	26715	1RB#24	5.55	≤13
		16QAM	26715	12RB#6	5.79	≤13
		16QAM	26715	12RB#0	5.88	≤13
		16QAM	26715	12RB#13	5.94	≤13
		16QAM	26715	25RB#0	6.61	≤13
		16QAM	26915	1RB#0	5.45	≤13
		16QAM	26915	1RB#12	5.39	≤13
		16QAM	26915	1RB#24	5.49	≤13
		16QAM	26915	12RB#13	5.82	≤13
		16QAM	26915	12RB#0	5.90	≤13
		16QAM	26915	12RB#6	5.79	≤13
		16QAM	26915	25RB#0	6.40	≤13
		16QAM	27015	1RB#12	4.82	≤13
		16QAM	27015	1RB#0	4.98	≤13
		16QAM	27015	1RB#24	5.04	≤13
		16QAM	27015	12RB#0	5.67	≤13
		16QAM	27015	12RB#6	5.53	≤13
		16QAM	27015	12RB#13	5.79	≤13
		16QAM	27015	25RB#0	6.37	≤13

Band	Bandwidth	Modulation	Channel Frequency (MHz)	RB Pos/RB Location	PAPR (dBm)	Limit (dBm)
Band26	10MHz	QPSK	26740	1RB#49	4.73	≤13
		QPSK	26740	1RB#24	4.57	≤13
		QPSK	26740	1RB#0	4.69	≤13
		QPSK	26740	25RB#0	5.15	≤13
		QPSK	26740	25RB#12	5.04	≤13
		QPSK	26740	25RB#25	5.16	≤13
		QPSK	26740	50RB#0	5.90	≤13
		QPSK	26915	1RB#0	4.59	≤13
		QPSK	26915	1RB#49	4.69	≤13
		QPSK	26915	1RB#24	4.65	≤13
		QPSK	26915	25RB#25	5.04	≤13
		QPSK	26915	25RB#0	5.06	≤13
		QPSK	26915	25RB#12	5.08	≤13
		QPSK	26915	50RB#0	5.81	≤13
		QPSK	26990	1RB#24	4.48	≤13
		QPSK	26990	1RB#0	4.65	≤13
		QPSK	26990	1RB#49	4.68	≤13
		QPSK	26990	25RB#0	5.26	≤13
		QPSK	26990	25RB#25	5.07	≤13
		QPSK	26990	25RB#12	5.07	≤13
		QPSK	26990	50RB#0	5.13	≤13
Band26	10MHz	16QAM	26740	1RB#49	5.70	≤13
		16QAM	26740	1RB#0	5.67	≤13
		16QAM	26740	1RB#24	5.47	≤13
		16QAM	26740	25RB#25	6.03	≤13
		16QAM	26740	25RB#12	6.08	≤13
		16QAM	26740	25RB#0	5.99	≤13
		16QAM	26740	50RB#0	6.41	≤13
		16QAM	26915	1RB#49	5.81	≤13
		16QAM	26915	1RB#0	5.64	≤13
		16QAM	26915	1RB#24	5.65	≤13
		16QAM	26915	25RB#25	6.08	≤13
		16QAM	26915	25RB#0	6.15	≤13
		16QAM	26915	25RB#12	5.97	≤13
		16QAM	26915	50RB#0	6.69	≤13
		16QAM	26990	1RB#24	5.02	≤13
		16QAM	26990	1RB#0	5.41	≤13
		16QAM	26990	1RB#49	5.35	≤13
		16QAM	26990	25RB#0	5.91	≤13
		16QAM	26990	25RB#12	5.96	≤13
		16QAM	26990	25RB#25	5.92	≤13
		16QAM	26990	50RB#0	6.72	≤13

7.2 EFFECTIVE (ISOTROPIC) RADIATED POWER

Result ***Pass***

Specification	FCC Part §2.1046 & §90.542
Test Method / Procedure	ANSI C63.26-2015 As per subclause 5 in 971168 D01 Power Meas License Digital Systems v03r01
Detector Function	Average
Requirement	The EIRP & ERP of mobile transmitters and auxiliary test transmitters must not exceed 3 watts

Test Setup:

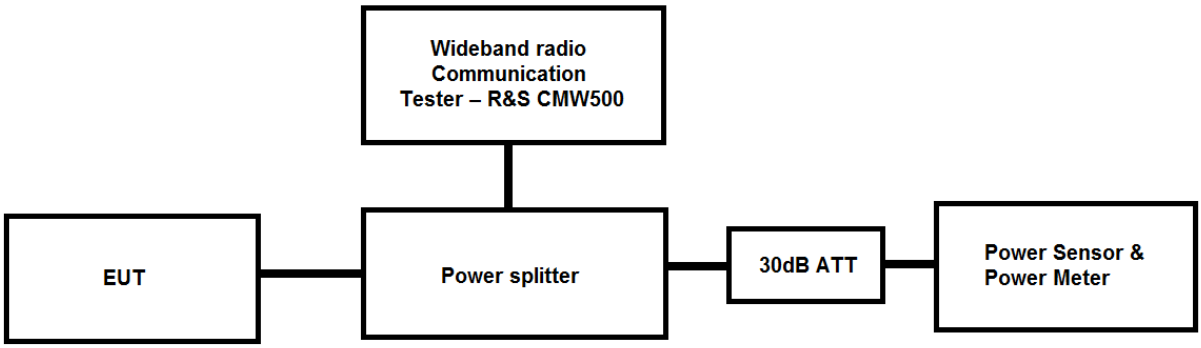

Environmental Conditions:

Temperature: +22.5°C **Voltage:** 12VDC through AC-DC Adapter **Relative Humidity:** 62%

KDB Guidelines applied:
Measurements were made as per section 5.2.4 in KDB 971168 D01 Power Meas License Digital Systems v03r01

Note:

1. All the losses are included during measurement and final values are mentioned in the test report.
2. Total Average Output power (dBm) = Measured Average power (dBm) + Attenuator factor (30dB) + Power Splitter (3.3 dB) + Cable loss (1dB)
3. For getting the EIRP(Equivalent Isotropic Radiated Power), the following formula should be taken to calculate it,

ERP (dBm) = Conducted power (dBm) + Antenna gain (dBd)
EIRP (dBm) = Conducted power (dBm) + Antenna gain (dBi)

Test Results:

Cellular Band	Channel Bandwidth (MHz)	Modulation Technique	Channel Number	RB Pos/RB allocation	Average Power (dBm)	ERP (dBm)	Limit (dBm)
14	5MHz	QPSK	23305	1RB#12	22.96	23.81	34.77
	5MHz	QPSK	23305	1RB#24	22.63	23.48	34.77
	5MHz	QPSK	23305	1RB#0	22.44	23.29	34.77
	5MHz	QPSK	23305	12RB#0	22.85	23.7	34.77
	5MHz	QPSK	23305	12RB#6	23.06	23.91	34.77
	5MHz	QPSK	23305	12RB#13	22.89	23.74	34.77
	5MHz	QPSK	23305	25RB#0	23.14	23.99	34.77
	5MHz	QPSK	23330	1RB#0	22.96	23.81	34.77
	5MHz	QPSK	23330	1RB#12	22.87	23.72	34.77
	5MHz	QPSK	23330	1RB#24	23.03	23.88	34.77
	5MHz	QPSK	23330	12RB#0	23.16	24.01	34.77
	5MHz	QPSK	23330	12RB#6	23.23	24.08	34.77
	5MHz	QPSK	23330	12RB#13	23.23	24.08	34.77
	5MHz	QPSK	23330	25RB#0	23.12	23.97	34.77
	5MHz	QPSK	23355	1RB#24	23.52	24.37	34.77
	5MHz	QPSK	23355	1RB#0	22.67	23.52	34.77
	5MHz	QPSK	23355	1RB#12	23.35	24.2	34.77
	5MHz	QPSK	23355	12RB#6	23.13	23.98	34.77
	5MHz	QPSK	23355	12RB#0	23.15	24	34.77
	5MHz	QPSK	23355	12RB#13	23.29	24.14	34.77
	5MHz	QPSK	23355	25RB#0	23.11	23.96	34.77
	5MHz	16QAM	23305	1RB#12	22.72	23.57	34.77
	5MHz	16QAM	23305	1RB#0	22.13	22.98	34.77
	5MHz	16QAM	23305	1RB#24	22.59	23.44	34.77
	5MHz	16QAM	23305	12RB#13	22.16	23.01	34.77
	5MHz	16QAM	23305	12RB#6	22.22	23.07	34.77
	5MHz	16QAM	23305	12RB#0	22.1	22.95	34.77
	5MHz	16QAM	23305	25RB#0	22.21	23.06	34.77
	5MHz	16QAM	23330	1RB#0	22.79	23.64	34.77
	5MHz	16QAM	23330	1RB#12	22.88	23.73	34.77
	5MHz	16QAM	23330	1RB#24	22.86	23.71	34.77
	5MHz	16QAM	23330	12RB#0	22.35	23.2	34.77
	5MHz	16QAM	23330	12RB#6	22.26	23.11	34.77
	5MHz	16QAM	23330	12RB#13	22.05	22.9	34.77
	5MHz	16QAM	23330	25RB#0	22.23	23.08	34.77
	5MHz	16QAM	23355	1RB#0	22.82	23.67	34.77
	5MHz	16QAM	23355	1RB#12	22.35	23.2	34.77
	5MHz	16QAM	23355	1RB#24	22.72	23.57	34.77
	5MHz	16QAM	23355	12RB#13	22.15	23	34.77
	5MHz	16QAM	23355	12RB#0	22.08	22.93	34.77
	5MHz	16QAM	23355	12RB#6	22.34	23.19	34.77
	5MHz	16QAM	23355	25RB#0	22.34	23.19	34.77

Cellular Band	Channel Bandwidth (MHz)	Modulation Technique	Channel Number	RB Pos/RB allocation	Average Power (dBm)	ERP (dBm)	Limit (dBm)
14	10MHz	QPSK	23330	1RB#49	22.88	23.73	34.77
	10MHz	QPSK	23330	1RB#24	22.88	23.73	34.77
	10MHz	QPSK	23330	1RB#0	23.04	23.89	34.77
	10MHz	QPSK	23330	25RB#0	23.17	24.02	34.77
	10MHz	QPSK	23330	25RB#12	23.27	24.12	34.77
	10MHz	QPSK	23330	25RB#25	23.22	24.07	34.77
	10MHz	QPSK	23330	50RB#0	23.12	23.97	34.77
	10MHz	16QAM	23330	1RB#49	23.02	23.87	34.77
	10MHz	16QAM	23330	1RB#0	22.4	23.25	34.77
	10MHz	16QAM	23330	1RB#24	23.18	24.03	34.77
	10MHz	16QAM	23330	25RB#0	22.06	22.91	34.77
	10MHz	16QAM	23330	25RB#12	22.32	23.17	34.77
	10MHz	16QAM	23330	25RB#25	22.25	23.1	34.77
	10MHz	16QAM	23330	50RB#0	22.21	23.06	34.77

Band	Bandwidth	Modulation	Channel Frequency (MHz)	RB Pos/RB Location	Conducted Power (dBm)	Measured ERP	Limit (dBm)
Band26	1.4MHz	QPSK	26697	1RB#0	22.36	23.21	38.45
		QPSK	26697	1RB#2	23.18	24.03	38.45
		QPSK	26697	1RB#5	23.17	24.02	38.45
		QPSK	26697	3RB#0	23.18	24.03	38.45
		QPSK	26697	3RB#1	23.13	23.98	38.45
		QPSK	26697	3RB#3	23.15	24.00	38.45
		QPSK	26697	6RB#0	24.07	24.92	38.45
		QPSK	26915	1RB#0	22.40	23.25	38.45
		QPSK	26915	1RB#5	22.34	23.19	38.45
		QPSK	26915	1RB#2	22.43	23.28	38.45
		QPSK	26915	3RB#0	24.07	24.92	38.45
		QPSK	26915	3RB#1	24.09	24.94	38.45
		QPSK	26915	3RB#3	24.02	24.87	38.45
		QPSK	26915	6RB#0	24.04	24.89	38.45
		QPSK	27033	1RB#5	22.23	23.08	38.45
		QPSK	27033	1RB#0	22.41	23.26	38.45
		QPSK	27033	1RB#2	22.38	23.23	38.45
		QPSK	27033	3RB#0	23.38	24.23	38.45
		QPSK	27033	3RB#1	23.39	24.24	38.45
		QPSK	27033	3RB#3	23.27	24.12	38.45
		QPSK	27033	6RB#0	23.33	24.18	38.45
Band26	1.4MHz	16QAM	26697	1RB#0	23.42	24.27	38.45
		16QAM	26697	1RB#2	23.32	24.17	38.45
		16QAM	26697	1RB#5	23.33	24.18	38.45
		16QAM	26697	3RB#1	23.24	24.09	38.45
		16QAM	26697	3RB#0	23.38	24.23	38.45
		16QAM	26697	3RB#3	23.24	24.09	38.45
		16QAM	26697	6RB#0	23.32	24.17	38.45
		16QAM	26915	1RB#0	23.53	24.38	38.45
		16QAM	26915	1RB#2	23.55	24.40	38.45
		16QAM	26915	1RB#5	23.48	24.33	38.45
		16QAM	26915	3RB#3	23.29	24.14	38.45
		16QAM	26915	3RB#0	22.44	23.29	38.45
		16QAM	26915	3RB#1	22.45	23.30	38.45
		16QAM	26915	6RB#0	23.05	23.90	38.45
		16QAM	27033	1RB#2	22.52	23.37	38.45
		16QAM	27033	1RB#0	22.57	23.42	38.45
		16QAM	27033	1RB#5	22.41	23.26	38.45
		16QAM	27033	3RB#0	23.64	24.49	38.45
		16QAM	27033	3RB#1	23.65	24.50	38.45
		16QAM	27033	3RB#3	23.52	24.37	38.45
		16QAM	27033	6RB#0	23.60	24.45	38.45

Band	Bandwidth	Modulation	Channel Frequency (MHz)	RB Pos/RB Location	Conducted Power (dBm)	Measured ERP (dBm)	Limit (dBm)
Band26	3MHz	QPSK	26705	1RB#8	22.33	23.18	38.45
		QPSK	26705	1RB#14	22.25	23.10	38.45
		QPSK	26705	1RB#0	22.32	23.17	38.45
		QPSK	26705	8RB#0	24.11	24.96	38.45
		QPSK	26705	8RB#4	23.16	24.01	38.45
		QPSK	26705	8RB#7	23.13	23.98	38.45
		QPSK	26705	15RB#0	24.15	25.00	38.45
		QPSK	26915	1RB#0	22.30	23.15	38.45
		QPSK	26915	1RB#14	22.32	23.17	38.45
		QPSK	26915	1RB#8	22.43	23.28	38.45
		QPSK	26915	8RB#7	24.02	24.87	38.45
		QPSK	26915	8RB#0	24.07	24.92	38.45
		QPSK	26915	8RB#4	24.06	24.91	38.45
		QPSK	26915	15RB#0	24.04	24.89	38.45
		QPSK	27025	1RB#8	22.53	23.38	38.45
		QPSK	27025	1RB#0	22.87	23.72	38.45
		QPSK	27025	1RB#14	22.17	23.02	38.45
		QPSK	27025	8RB#0	23.74	24.59	38.45
		QPSK	27025	8RB#7	23.38	24.23	38.45
		QPSK	27025	8RB#4	23.56	24.41	38.45
		QPSK	27025	15RB#0	23.57	24.42	38.45
Band26	3MHz	16QAM	26705	1RB#14	22.10	22.95	38.45
		16QAM	26705	1RB#0	22.17	23.02	38.45
		16QAM	26705	1RB#8	22.18	23.03	38.45
		16QAM	26705	8RB#7	23.26	24.11	38.45
		16QAM	26705	8RB#4	23.28	24.13	38.45
		16QAM	26705	8RB#0	23.32	24.17	38.45
		16QAM	26705	15RB#0	23.28	24.13	38.45
		16QAM	26915	1RB#14	23.40	24.25	38.45
		16QAM	26915	1RB#0	23.45	24.30	38.45
		16QAM	26915	1RB#8	23.56	24.41	38.45
		16QAM	26915	8RB#7	23.21	24.06	38.45
		16QAM	26915	8RB#0	23.26	24.11	38.45
		16QAM	26915	8RB#4	23.26	24.11	38.45
		16QAM	26915	15RB#0	23.20	24.05	38.45
		16QAM	27025	1RB#8	22.68	23.53	38.45
		16QAM	27025	1RB#0	23.04	23.89	38.45
		16QAM	27025	1RB#14	22.32	23.17	38.45
		16QAM	27025	8RB#0	23.85	24.70	38.45
		16QAM	27025	8RB#4	23.68	24.53	38.45
		16QAM	27025	8RB#7	23.50	24.35	38.45
		16QAM	27025	15RB#0	23.60	24.45	38.45

Band	Bandwidth	Modulation	Channel Frequency (MHz)	RB Pos/RB Location	Conducted Power (dBm)	Measured ERP	Limit (dBm)
Band26	5MHz	QPSK	26715	1RB#0	22.33	23.18	38.45
		QPSK	26715	1RB#12	22.46	23.31	38.45
		QPSK	26715	1RB#24	22.32	23.17	38.45
		QPSK	26715	12RB#0	24.12	24.97	38.45
		QPSK	26715	12RB#6	22.29	23.14	38.45
		QPSK	26715	12RB#13	24.09	24.94	38.45
		QPSK	26715	25RB#0	24.05	24.90	38.45
		QPSK	26915	1RB#0	23.09	23.94	38.45
		QPSK	26915	1RB#24	23.16	24.01	38.45
		QPSK	26915	1RB#12	23.23	24.08	38.45
		QPSK	26915	12RB#0	23.99	24.84	38.45
		QPSK	26915	12RB#6	24.08	24.93	38.45
		QPSK	26915	12RB#13	24.00	24.85	38.45
		QPSK	26915	25RB#0	24.05	24.90	38.45
		QPSK	27015	1RB#24	23.10	23.95	38.45
		QPSK	27015	1RB#0	22.34	23.19	38.45
		QPSK	27015	1RB#12	23.91	24.76	38.45
		QPSK	27015	12RB#0	24.17	25.02	38.45
		QPSK	27015	12RB#6	23.95	24.80	38.45
		QPSK	27015	12RB#13	23.50	24.35	38.45
		QPSK	27015	25RB#0	23.85	24.70	38.45
Band26	5MHz	16QAM	26715	1RB#0	23.31	24.16	38.45
		16QAM	26715	1RB#12	23.31	24.16	38.45
		16QAM	26715	1RB#24	23.21	24.06	38.45
		16QAM	26715	12RB#6	23.26	24.11	38.45
		16QAM	26715	12RB#0	23.26	24.11	38.45
		16QAM	26715	12RB#13	23.23	24.08	38.45
		16QAM	26715	25RB#0	24.13	24.98	38.45
		16QAM	26915	1RB#0	23.20	24.05	38.45
		16QAM	26915	1RB#12	23.33	24.18	38.45
		16QAM	26915	1RB#24	23.31	24.16	38.45
		16QAM	26915	12RB#13	24.18	25.03	38.45
		16QAM	26915	12RB#0	24.18	25.03	38.45
		16QAM	26915	12RB#6	23.28	24.13	38.45
		16QAM	26915	25RB#0	24.18	25.03	38.45
		16QAM	27015	1RB#12	23.52	24.37	38.45
		16QAM	27015	1RB#0	22.71	23.56	38.45
		16QAM	27015	1RB#24	22.72	23.57	38.45
		16QAM	27015	12RB#0	23.43	24.28	38.45
		16QAM	27015	12RB#6	23.19	24.04	38.45
		16QAM	27015	12RB#13	22.75	23.60	38.45
		16QAM	27015	25RB#0	23.98	24.83	38.45

Band	Bandwidth	Modulation	Channel Frequency (MHz)	RB Pos/RB Location	Conducted Power (dBm)	Measured ERP (dBm)	Limit (dBm)
Band26	10MHz	QPSK	26740	1RB#49	22.69	23.54	38.45
		QPSK	26740	1RB#24	23.25	24.10	38.45
		QPSK	26740	1RB#0	22.43	23.28	38.45
		QPSK	26740	25RB#0	23.88	24.73	38.45
		QPSK	26740	25RB#12	24.14	24.99	38.45
		QPSK	26740	25RB#25	23.97	24.82	38.45
		QPSK	26740	50RB#0	23.88	24.73	38.45
		QPSK	26915	1RB#0	22.73	23.58	38.45
		QPSK	26915	1RB#49	22.72	23.57	38.45
		QPSK	26915	1RB#24	23.17	24.02	38.45
		QPSK	26915	25RB#25	23.98	24.83	38.45
		QPSK	26915	25RB#0	23.94	24.79	38.45
		QPSK	26915	25RB#12	24.07	24.92	38.45
		QPSK	26915	50RB#0	23.84	24.69	38.45
		QPSK	26990	1RB#24	23.48	24.33	38.45
		QPSK	26990	1RB#0	22.61	23.46	38.45
		QPSK	26990	1RB#49	22.70	23.55	38.45
		QPSK	26990	25RB#0	24.16	25.01	38.45
		QPSK	26990	25RB#25	23.81	24.66	38.45
		QPSK	26990	25RB#12	23.33	24.18	38.45
		QPSK	26990	50RB#0	23.99	24.84	38.45
Band26	10MHz	16QAM	26740	1RB#49	22.60	23.45	38.45
		16QAM	26740	1RB#0	22.53	23.38	38.45
		16QAM	26740	1RB#24	23.32	24.17	38.45
		16QAM	26740	25RB#25	24.18	25.03	38.45
		16QAM	26740	25RB#12	23.26	24.11	38.45
		16QAM	26740	25RB#0	23.07	23.92	38.45
		16QAM	26740	50RB#0	24.04	24.89	38.45
		16QAM	26915	1RB#49	22.75	23.60	38.45
		16QAM	26915	1RB#0	22.56	23.41	38.45
		16QAM	26915	1RB#24	23.10	23.95	38.45
		16QAM	26915	25RB#25	24.08	24.93	38.45
		16QAM	26915	25RB#0	24.06	24.91	38.45
		16QAM	26915	25RB#12	23.20	24.05	38.45
		16QAM	26915	50RB#0	24.03	24.88	38.45
		16QAM	26990	1RB#24	23.90	24.75	38.45
		16QAM	26990	1RB#0	23.94	24.79	38.45
		16QAM	26990	1RB#49	23.97	24.82	38.45
		16QAM	26990	25RB#0	24.20	25.05	38.45
		16QAM	26990	25RB#12	23.47	24.32	38.45
		16QAM	26990	25RB#25	23.00	23.85	38.45
		16QAM	26990	50RB#0	24.00	24.85	38.45

7.3 Field Strength of Spurious Radiation

Result ***Pass***

Specification	FCC Part §2.1053 & §90.543 (c) (f)
Test Method / Procedure	As per subclause 5.5 of ANSI C63.26-2015 As per subclause 7 in 971168 D01 Power Meas License Digital Systems v03r01
Measurement Bandwidth (RBW)	100 kHz for frequency range < 1GHz 1 MHz for Frequency range >1GHz
Detector Function	Peak
Measuring Distance	3 m
Requirement	The power of any emission outside the authorized frequency range must be attenuated below the transmitting power (P) by a factor of atleast 43+10log(P) dB
Test setup	Refer TEST METHODOLOGY

Environmental conditions:

Temperature (Norm) = + 24 °C Voltage =12VDC Through AC/DC Adapter Relative humidity = 62 %

Note: All the losses are included during measurement and final values are mentioned in the test report. Refer TEST METHODOLOGY for more details

1. All the losses are included during measurement and final values are mentioned in the test report.
2. Spurious emission limit is derived using the following equation: 43 + 10*log(P) = 43 + 10*log(P) = -13

P is average power in W

Test results:

Test results for frequency range 9kHz – 30MHz

No emissions found in frequency range 9 kHz to 30 MHz, and measured levels are below 20dB from the limit line, hence not reported

Test results for frequency range 30MHz – 200MHz

Antenna Polarization	Measured Frequency (MHz)	Measured Emission (dBm)	Limit (dBm)	Margin (dB)
Vertical	35.10	-19.57	-13.00	-6.57
	48.66	-20.33	-13.00	-7.33
	77.49	-18.54	-13.00	-5.54
	150.03	-18.42	-13.00	-5.42
	192.84	-16.60	-13.00	-3.60
Horizontal	32.31	-31.94	-13.00	-18.94
	53.04	-34.17	-13.00	-21.17
	80.13	-32.57	-13.00	-19.57
	150.00	-20.94	-13.00	-7.94

Plots for frenquency range 30MHz to 200MHz

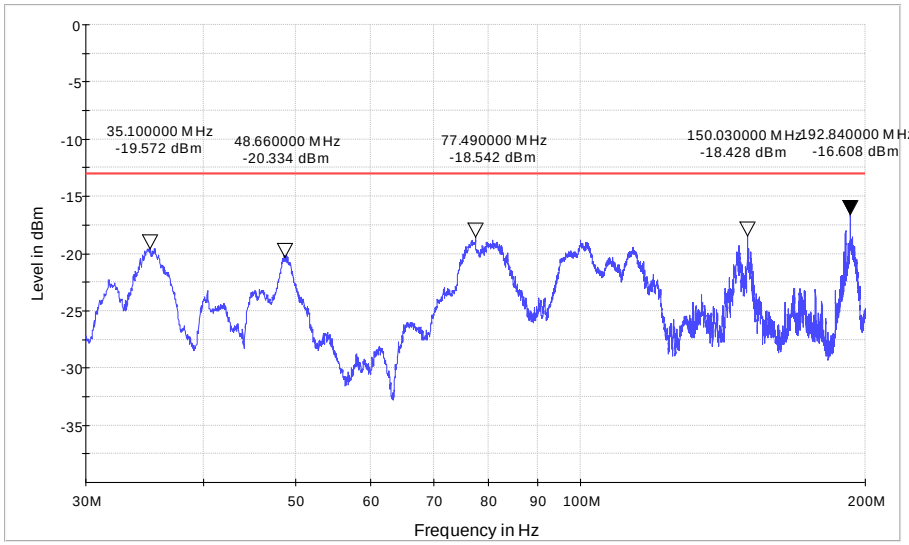

Frequency Range: 30MHz-200MHz **Polarization:Vertical**

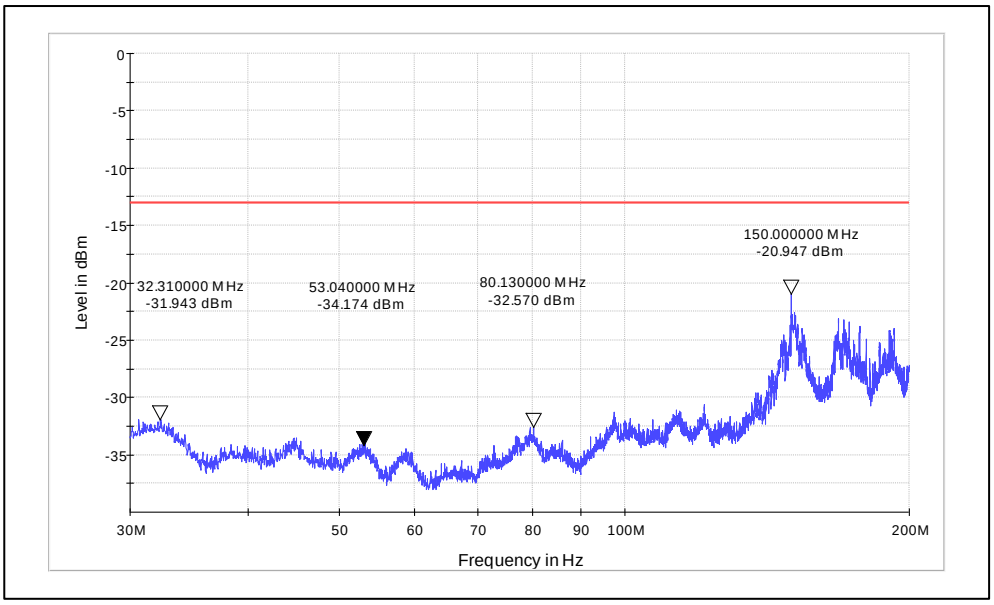

Frequency Range: 30MHz-200MHz **Polarization:Horizontal**

Test results for frequency range 200MHz – 1GHz

Antenna Polarization	Measured Frequency (MHz)	Measured Emission (dBm)	Limit (dBm)	Margin (dB)
Vertical	201.86	-14.94	-13.00	-1.94
	299.99	-18.97	-13.00	-5.97
	400.01	-18.57	-13.00	-5.57
	590.81	-25.84	-13.00	-12.84
	898.40	-27.65	-13.00	-14.65
Horizontal	201.89	-17.56	-13.00	-4.56
	312.02	-19.07	-13.00	-6.07
	424.97	-20.29	-13.00	-7.29
	647.36	-25.11	-13.00	-12.11
	884.48	-27.32	-13.00	-14.32

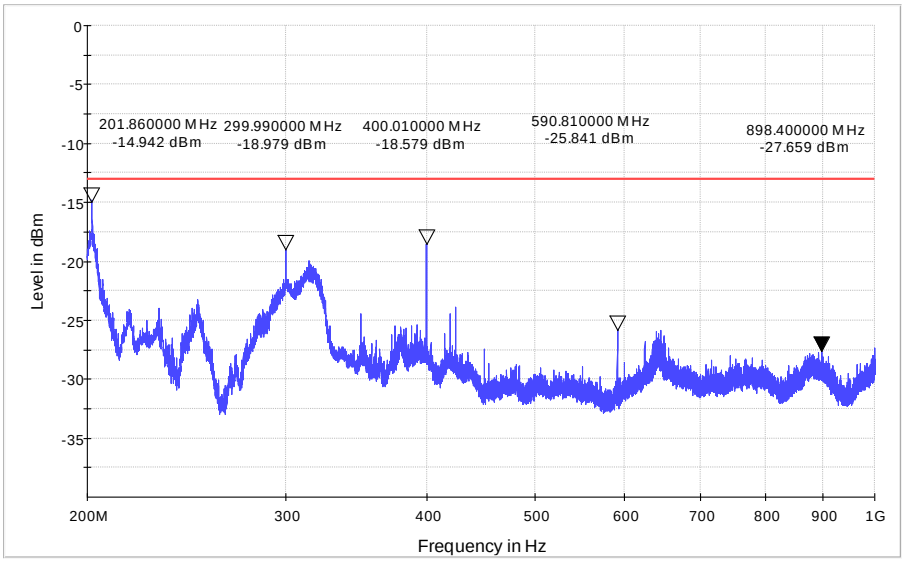

Frequency Range: 200MHz-1GHz **Polarization:Vertical**

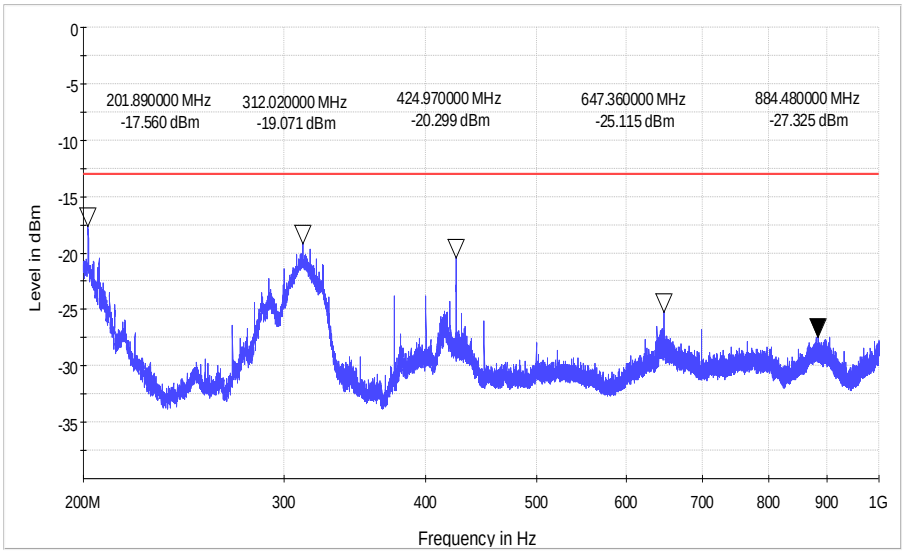

Frequency Range: 200MHz-1GHz **Polarization:Horizontal**

Above 1GHz Test results:

LTE Band14:

Band	Modulation	Cell BW	No. of RB	RB Pos	Channel Frequency (MHz)	Measured Frequency (MHz)	Antenna Polarization	Emission Level (dBm)	Limit (dBm)	Margin (dB)
14	QPSK	5	25	0	790.50	1581.00	Vertical	-54.74	-13	-41.74
						2371.50		-55.83	-13	-42.83
						3162.00		-54.83	-13	-41.83
						1581.00	Horizontal	-58.62	-13	-45.62
						2371.50		-55.12	-13	-42.12
						3162.00		-54.61	-13	-41.61
			12	6	793.00	1586.00	Vertical	-57.60	-13	-44.60
						2379.00		-54.80	-13	-41.80
						3172.00		-55.22	-13	-42.22
						1586.00	Horizontal	-55.12	-13	-42.12
						2379.00		-54.90	-13	-41.90
						3172.00		-55.07	-13	-42.07
			1	24	795.50	1591.00	Vertical	-60.39	-13	-47.39
						2386.50		-50.31	-13	-37.31
						3182.00		-54.76	-13	-41.76
						1591.00	Horizontal	-56.67	-13	-43.67
						2386.50		-50.33	-13	-37.33
						3182.00		-51.45	-13	-38.45
		10	25	12	793.00	1586.00	Vertical	-57.72	-13	-44.72
						2379.00		-55.18	-13	-42.18
						3172.00		-54.29	-13	-41.29
						1586.00	Horizontal	-56.12	-13	-43.12
						2379.00		-55.59	-13	-42.59
						3172.00		-54.87	-13	-41.87

Band	Modulation	Cell BW	No. of RB	RB Pos	Channel Frequency (MHz)	Measured Frequency (MHz)	Antenna Polarization	Emission Level (dBm)	Limit (dBm)	Margin (dB)
14	16QAM	5	1	12	790.50	1581.00	Vertical	-55.03	-13	-42.03
						2371.50		-53.64	-13	-40.64
						3162.00		-54.62	-13	-41.62
						1581.00	Horizontal	-54.30	-13	-41.30
						2371.50		-51.36	-13	-38.36
						3162.00		-51.78	-13	-38.78
			1	12	793.00	1586.00	Vertical	-56.85	-13	-43.85
						2379.00		-51.49	-13	-38.49
						3172.00		-52.80	-13	-39.80
						1586.00	Horizontal	-54.39	-13	-41.39
						2379.00		-54.26	-13	-41.26
						3172.00		-53.23	-13	-40.23
			1	0	795.50	1591.00	Vertical	-60.07	-13	-47.07
						2386.50		-56.00	-13	-43.00
						3182.00		-54.81	-13	-41.81
						1591.00	Horizontal	-50.75	-13	-37.75
						2386.50		-56.27	-13	-43.27
						3182.00		-55.19	-13	-42.19
		10	1	24	793.00	1586.00	Vertical	-51.67	-13	-38.67
						2379.00		-50.87	-13	-37.87
						3172.00		-54.57	-13	-41.57
						1586.00	Horizontal	-51.23	-13	-38.23
						2379.00		-54.47	-13	-41.47
						3172.00		-53.97	-13	-40.97

LTE Band 26:

Band	Modulation	Cell BW	No. of RB	RB Pos	Channel Frequency (MHz)	Measured Frequency (MHz)	Antenna Polarization	Emission Level (dBm)	Limit (dBm)	Margin (dB)
26	QPSK	1.4	6	0	814.70	1629.40	Vertical	-59.70	-13	-46.70
						2444.10		-49.55	-13	-36.55
						3258.80		-55.42	-13	-42.42
						1629.40	Horizontal	-59.90	-13	-46.90
						2444.10		-48.43	-13	-35.43
						3258.80		-54.66	-13	-41.66
			3	1	836.50	1673.00	Vertical	-57.01	-13	-44.01
						2509.50		-43.78	-13	-30.78
						3346.00		-54.38	-13	-41.38
						1673.00	Horizontal	-60.52	-13	-47.52
						2509.50		-44.10	-13	-31.10
						3346.00		-54.75	-13	-41.75
			3	1	848.30	1696.60	Vertical	-54.59	-13	-41.59
						2544.90		-43.75	-13	-30.75
						3393.20		-51.00	-13	-38.00
						1696.60	Horizontal	-58.50	-13	-45.50
						2544.90		-43.90	-13	-30.90
						3393.20		-52.21	-13	-39.21
		3	15	0	815.50	1631.00	Vertical	-60.04	-13	-47.04
						2446.50		-51.18	-13	-38.18
						3262.00		-55.24	-13	-42.24
						1631.00	Horizontal	-60.57	-13	-47.57
						2446.50		-51.24	-13	-38.24
						3262.00		-54.59	-13	-41.59
			8	1	836.50	1673.00	Vertical	-59.70	-13	-46.70
						2509.50		-48.63	-13	-35.63
						3346.00		-55.57	-13	-42.57
						1673.00	Horizontal	-60.07	-13	-47.07
						2509.50		-48.32	-13	-35.32
						3346.00		-55.99	-13	-42.99
			15	0	847.50	1695.00	Vertical	-58.40	-13	-45.40
						2542.50		-49.00	-13	-36.00
						3390.00		-54.16	-13	-41.16
						1695.00	Horizontal	-60.53	-13	-47.53
						2542.50		-50.07	-13	-37.07
						3390.00		-54.64	-13	-41.64

Band	Modulation	Cell BW	No. of RB	RB Pos	Channel Frequency (MHz)	Measured Frequency (MHz)	Antenna Polarization	Emission Level (dBm)	Limit (dBm)	Margin (dB)
26	QPSK	5	12	13	816.50	1633.00	Vertical	-60.07	-13	-47.07
						2449.50		-51.09	-13	-38.09
						3266.00		-55.44	-13	-42.44
						1633.00	Horizontal	-60.67	-13	-47.67
						2449.50		-50.92	-13	-37.92
						3266.00		-55.33	-13	-42.33
			12	6	836.50	1673.00	Vertical	-59.57	-13	-46.57
						2509.50		-48.73	-13	-35.73
						3346.00		-54.98	-13	-41.98
						1673.00	Horizontal	-60.71	-13	-47.71
						2509.50		-50.90	-13	-37.90
						3346.00		-55.22	-13	-42.22
			12	0	846.50	1693.00	Vertical	-57.98	-13	-44.98
						2539.50		-50.31	-13	-37.31
						3386.00		-56.21	-13	-43.21
						1693.00	Horizontal	-59.91	-13	-46.91
						2539.50		-50.11	-13	-37.11
						3386.00		-56.08	-13	-43.08
		10	50	0	819.00	1638.00	Vertical	-59.22	-13	-46.22
						2457.00		-52.61	-13	-39.61
						3276.00		-55.90	-13	-42.90
						1638.00	Horizontal	-61.44	-13	-48.44
						2457.00		-52.43	-13	-39.43
						3276.00		-55.23	-13	-42.23
			25	12	836.50	1673.00	Vertical	-60.14	-13	-47.14
						2509.50		-51.71	-13	-38.71
						3346.00		-55.73	-13	-42.73
						1673.00	Horizontal	-60.77	-13	-47.77
						2509.50		-52.77	-13	-39.77
						3346.00		-56.24	-13	-43.24
			25	0	844.00	1688.00	Vertical	-60.64	-13	-47.64
						2532.00		-52.17	-13	-39.17
						3376.00		-56.15	-13	-43.15
						1688.00	Horizontal	-60.36	-13	-47.36
						2532.00		-51.40	-13	-38.40
						3376.00		-56.27	-13	-43.27

Band	Modulation	Cell BW	No. of RB	RB Pos	Channel Frequency (MHz)	Measured Frequency (MHz)	Antenna Polarization	Emission Level (dBm)	Limit (dBm)	Margin (dB)
26	16QAM	1.4	1	0	814.70	1629.40	Vertical	-60.35	-13	-47.35
						2444.10		-49.01	-13	-36.01
						3258.80		-55.44	-13	-42.44
						1629.40	Horizontal	-60.64	-13	-47.64
						2444.10		-46.29	-13	-33.29
						3258.80		-55.80	-13	-42.80
			1	2	836.50	1673.00	Vertical	-56.23	-13	-43.23
						2509.50		-45.14	-13	-32.14
						3346.00		-53.12	-13	-40.12
						1673.00	Horizontal	-59.63	-13	-46.63
						2509.50		-45.01	-13	-32.01
						3346.00		-54.11	-13	-41.11
			3	1	848.30	1696.60	Vertical	-54.53	-13	-41.53
						2544.90		-44.13	-13	-31.13
						3393.20		-50.12	-13	-37.12
						1696.60	Horizontal	-58.67	-13	-45.67
						2544.90		-46.21	-13	-33.21
						3393.20		-50.64	-13	-37.64
		3	8	0	815.50	1631.00	Vertical	-60.30	-13	-47.30
						2446.50		-50.64	-13	-37.64
						3262.00		-56.07	-13	-43.07
						1631.00	Horizontal	-60.59	-13	-47.59
						2446.50		-48.92	-13	-35.92
						3262.00		-55.61	-13	-42.61
			1	8	836.50	1673.00	Vertical	-56.83	-13	-43.83
						2509.50		-44.75	-13	-31.75
						3346.00		-55.82	-13	-42.82
						1673.00	Horizontal	-60.95	-13	-47.95
						2509.50		-47.22	-13	-34.22
						3346.00		-51.77	-13	-38.77
			8	0	847.50	1695.00	Vertical	-59.68	-13	-46.68
						2542.50		-51.76	-13	-38.76
						3390.00		-54.59	-13	-41.59
						1695.00	Horizontal	-60.31	-13	-47.31
						2542.50		-49.49	-13	-36.49
						3390.00		-56.15	-13	-43.15

Band	Modulation	Cell BW	No. of RB	RB Pos	Channel Frequency (MHz)	Measured Frequency (MHz)	Antenna Polarization	Emission Level (dBm)	Limit (dBm)	Margin (dB)
26	16QAM	5	25	0	816.50	1633.00	Vertical	-60.44	-13	-47.44
						2449.50		-51.76	-13	-38.76
						3266.00		-54.89	-13	-41.89
						1633.00	Horizontal	-60.73	-13	-47.73
						2449.50		-53.20	-13	-40.20
						3266.00		-55.81	-13	-42.81
			25	0	836.50	1673.00	Vertical	-60.00	-13	-47.00
						2509.50		-51.16	-13	-38.16
						3346.00		-56.41	-13	-43.41
						1673.00	Horizontal	-60.12	-13	-47.12
						2509.50		-52.15	-13	-39.15
						3346.00		-56.37	-13	-43.37
			25	0	846.50	1693.00	Vertical	-60.14	-13	-47.14
						2539.50		-52.34	-13	-39.34
						3386.00		-55.78	-13	-42.78
						1693.00	Horizontal	-60.72	-13	-47.72
						2539.50		-50.93	-13	-37.93
						3386.00		-55.85	-13	-42.85
		10	25	25	819.00	1638.00	Vertical	-61.16	-13	-48.16
						2457.00		-51.39	-13	-38.39
						3276.00		-55.72	-13	-42.72
						1638.00	Horizontal	-60.67	-13	-47.67
						2457.00		-52.79	-13	-39.79
						3276.00		-54.85	-13	-41.85
			25	25	836.50	1673.00	Vertical	-60.73	-13	-47.73
						2509.50		-51.27	-13	-38.27
						3346.00		-55.97	-13	-42.97
						1673.00	Horizontal	-60.85	-13	-47.85
						2509.50		-51.12	-13	-38.12
						3346.00		-56.49	-13	-43.49
			25	0	844.00	1688.00	Vertical	-60.65	-13	-47.65
						2532.00		-51.00	-13	-38.00
						3376.00		-54.96	-13	-41.96
						1688.00	Horizontal	-60.48	-13	-47.48
						2532.00		-52.49	-13	-39.49
						3376.00		-55.81	-13	-42.81

8 Conducted Spurious Emission Test on AC Power Line

Result ***Pass***

Test Specification : FCC Part 15 Section 15.207

Test Method : ANSI C 63.10-2013

Testing Location : Screened room

Measurement Bandwidth : 9kHz

Frequency Range : 150kHz – 30MHz

Supply Voltage : 110VAC,60Hz

Test Method : Refer TEST METHODOLOGY

Limits of section 15.207

Frequency of emission (MHz)	Conducted limit (dBµV)	
	Quasi-peak (dBµV)	Average (dBµV)
0.15-0.5	66-56*	56-46*
0.5-5	56	46
5-30	60	50

* Decreases with the logarithm of the frequency

Test Conditions:

Normal Temperature = +24°C Voltage (V norm) = 110V AC through AC to DC Adapter)
Relative Humidity = 64%

Test Result:

Power: 110V 60Hz_LINE

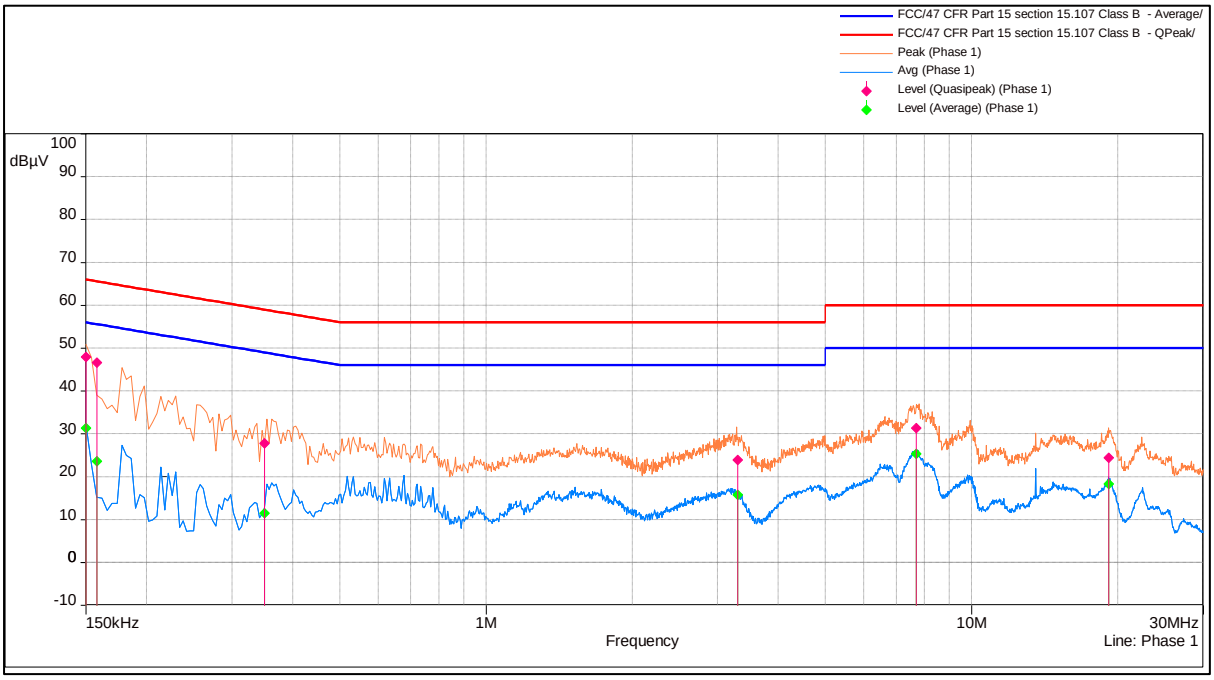

Line Graph

Quasi Peak:

Frequency (MHz)	Correction (dB)	Level (dBµV)	Limit (dBµV)	Margin (dB)	Comments
0.1518	19.89	47.93	66	-18.07	Pass
0.1564	19.89	46.59	65.57	-18.98	Pass
7.6907	20.06	31.33	60	-28.67	Pass
0.34805	19.86	27.83	58.96	-31.13	Pass
3.2941	20.03	23.92	56	-32.08	Pass
19.1598	20.28	24.45	60	-35.55	Pass

Line Table

Average:

Frequency (MHz)	Correction (dB)	Level (dBµV)	Limit (dBµV)	Margin (dB)	Comments
0.1518	19.89	31.4	56	-24.6	Pass
7.6907	20.06	25.31	50	-24.69	Pass
3.2941	20.03	15.78	46	-30.22	Pass
19.1598	20.28	18.37	50	-31.63	Pass
0.1564	19.89	23.61	55.57	-31.95	Pass
0.34805	19.86	11.47	48.96	-37.5	Pass

Line Table

Power: 110V 60Hz_NEUTRAL

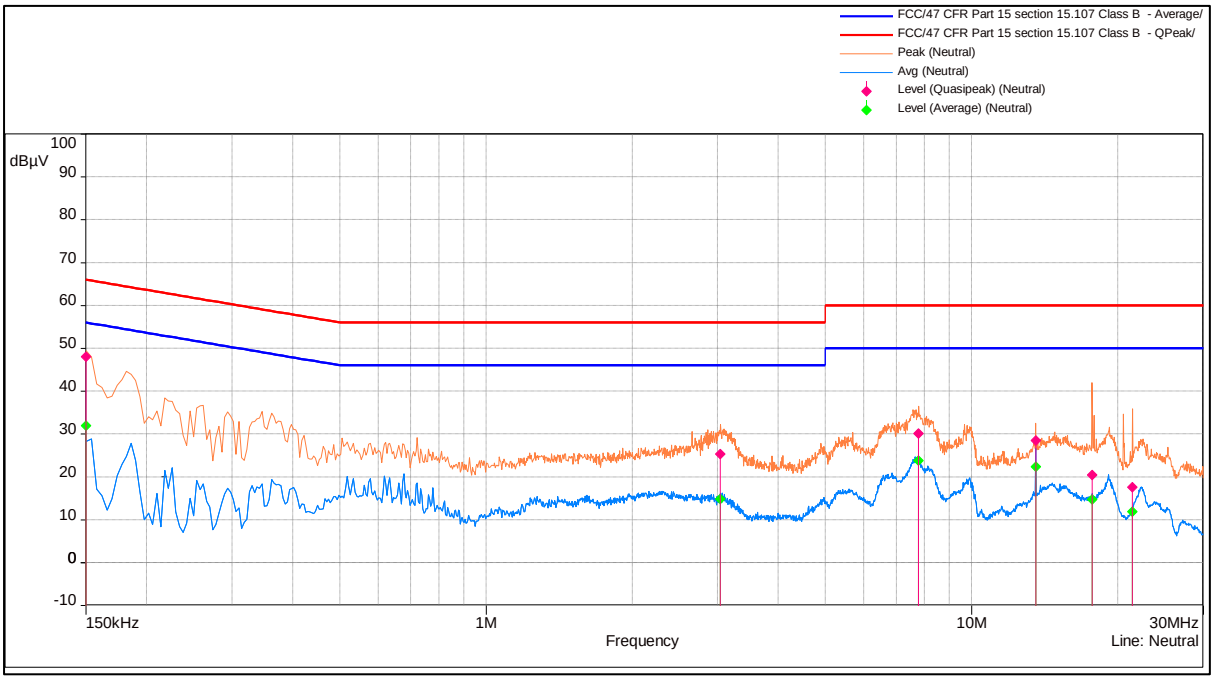

Neutral Graph

Quasi Peak:

Frequency (MHz)	Correction (dB)	Level (dBµV)	Limit (dBµV)	Margin (dB)	Comments
0.1518	19.87	48.03	66	-17.97	Pass
7.76495	19.88	30.16	60	-29.84	Pass
3.03305	19.85	25.34	56	-30.66	Pass
13.56065	19.99	28.54	60	-31.46	Pass
17.70565	20.08	20.45	60	-39.55	Pass
21.42275	20.09	17.6	60	-42.4	Pass

Neutral Table

Average:

Frequency (MHz)	Correction (dB)	Level (dBµV)	Limit (dBµV)	Margin (dB)	Comments
0.1518	19.87	31.97	56	-24.03	Pass
7.76495	19.88	23.83	50	-26.17	Pass
13.56065	19.99	22.36	50	-27.64	Pass
3.03305	19.85	14.9	46	-31.1	Pass
17.70565	20.08	14.72	50	-35.28	Pass
21.42275	20.09	11.86	50	-38.14	Pass

Neutral Table

9 LIST OF TABLES

Table 1: List of test and measurement instruments 7
Table 2: Instrument application Software versions 7
Table 3: Ratings and System Details as declared by Client* 8
Table 4: Antenna Gain 8
Table 5: Measurement Uncertainty 9
Table 6: List of Center frequencies 10

10 LIST OF FIGURES

Figure 1: Frequency Range 9 kHz- 30 MHz 13
Figure 2: Frequency Range 30 MHz – 200 MHz 13
Figure 3: Frequency Range 200 MHz - 1GHz 14
Figure 4: Frequency Range above 1 GHz 14

*****END OF TEST REPORT*****