BLUTRON

User Manual
Limited Warranty

Blurton One Series Electric Scooter

The manufacturer reserves the right to make changes to the product, release firmware updates, and updates this manual at any time. Visit www.blutronpower.com to download the latest user materials.

BLUTRON

Contents

1 Riding Safety ---------- 01

2 Packing List ---------- 03

3 Diagram ---------- 04

4 Dashboard ---------- 05

5 Assembling Your Scooter ---------- 06

6 Charging ---------- 07

7 Learning to Ride ---------- 07

8 Warnings ---------- 09

9 Folding and Carrying ---------- 12

10 Maintenance ---------- 13

11 Specifications ---------- 14

12 Blutron APP ---------- 15

13 Contact ---------- 15

14 Limited Warranty ---------- 16

1 Riding Safety

1. The electric scooter is a recreational product. Before mastering riding skills, you need to practice. Neither Blutron Power Inc.and its subsidiaries and affiliates) nor the manufacturer is responsible for any injuries or damage caused by a rider's inexperience or failure to follow the instructions in this document.

2. Please understand that you can reduce the risk by following all the instructions and warnings in this manual, but you cannot eliminate all the risks. Remember that whenever you ride the scooter you risk injury from loss of control, collisions, and falls. When entering into public spaces always comply with the local laws and regulations. As with other vehicles, faster speeds require longer braking distance. Sudden braking on low traction surfaces could lead to wheel slip, or falls. Be cautious and always keep a safe distance between you and other people or vehicles when riding. Be alert and slow down when entering unfamiliar areas.

3. Always wear a helmet when riding. Use an approved bicycle or skateboard helmet that fits properly with the chin strap in place, and provides protection for the back of your head.

4. Do not attempt your first ride in any area where you might encounter children, pedestrians, pets, vehicles, bicycles, or other obstacles and potential hazards.

5. Respect pedestrians by always yielding the right of way. Pass on the left whenever possible. When approaching a pedestrian from the front, stay to the right and slow down. Avoid startling pedestrians. When approaching from behind, announce yourself and slow down to walking speed when passing. Please obey local traffic laws and regulations if situation is different.

6. In places without laws comply with the safety guidelines outlined in this manual. Neither Blutron Power Inc.and its subsidiaries and affiliates) nor the manufacturer is responsible for any property damage, personal injury/death, accidents, or legal disputes caused by violations of the safety instructions.

7. Do not allow anyone to ride your scooter on his/her own unless they have carefully read this manual. The safety of new riders is your responsibility. Assist new riders until they are comfortable with the basic operation of the scooter. Make sure each new rider wears a helmet and other protective gear.

8. Before each ride check for loose fasteners and damaged components. If the scooter makes abnormal sounds or signals an alarm, immediately stop riding. Diagnose your scooter carefully and call your dealer/distributor for service.

9. Be alert! Scan both far ahead and in front of your scooter — your eyes are your best tool for safely avoiding obstacles and low traction surfaces (including, but not limited to, wet ground, loose sand, loose gravel, and ice).

10. To reduce risk of injury, you must read and follow all "CAUTION" and "WARNING" notices in this document. Do not ride at an unsafe speed. Under no circumstance should you ride on roads with motor vehicles. The manufacturer recommends riders be 14+ years old. Always follow these safety instructions:

A.People who should not ride the scooter include:

i. Anyone under the influence of alcohol or drugs.

ii. Anyone who suffers from disease that puts them at risk if they engage in strenuous physical activity.

iii. Anyone who has problems with balance or with motor skills that would interfere with their ability to maintain balance.

iv. nyone whose weight is outside the stated limits (see Specifications).

v.Pregnant women.

B. Riders under the age of 18 years old should ride under adult supervision.

C. Comply with local laws and regulations when riding this product. Do not ride where prohibited by local laws.

D. To ride safely, you must be able to clearly see what is in front of you and you must be clearly visible to others.

E. Do not ride in the snow, in the rain, or on roads which are wet, muddy, icy, or that are slippery for any reason. Do not ride over obstacles (sand, loose gravel, or sticks). Doing so could result in a loss of balance or traction and could cause a fall.

11. Do not attempt to charge your scooter if the charge port or the charger is wet.

12. As with any electronic device, use a surge protector when charging to help protect your scooter from damage due to power surges and voltage spikes. Only use the original charger. Do not use a charger from any other product.

13. Do not modify your scooter. Modifications to your scooter could interfere with the operation of the scooter, could result in serious injury and/or damage, and could void the Limited Warranty.

2 Packing List

Assembled Scooter

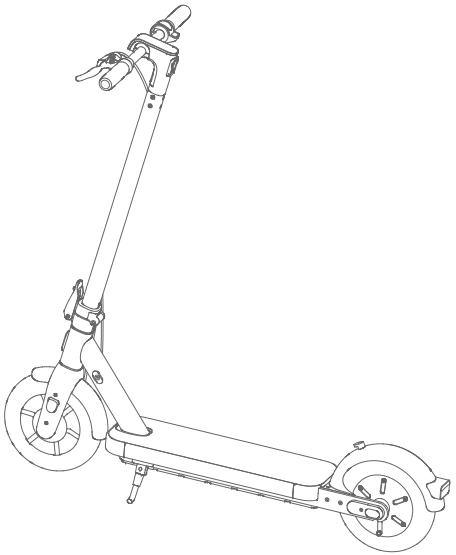

User Materials

Accessories

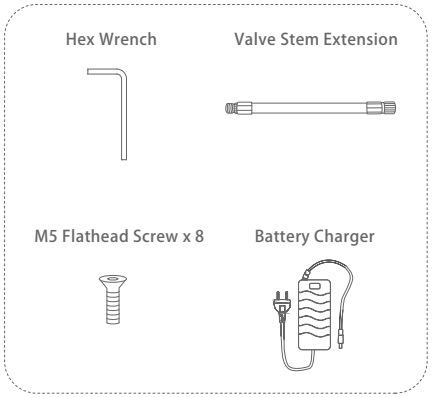

When unpacking your scooter, please verify that the above items are included in the package. If you are missing any components, please contact your dealer/distributor or nearest service center (see contact in the user manual). After verifying that all components are present and in good condition, you can assemble your new scooter.

Please retain the box and packaging materials in case you need to ship your scooter in the future.

Remember to power off your scooter and unplug the power cord before assembling, mounting accessories, or cleaning the mainframe.

3 Diagram

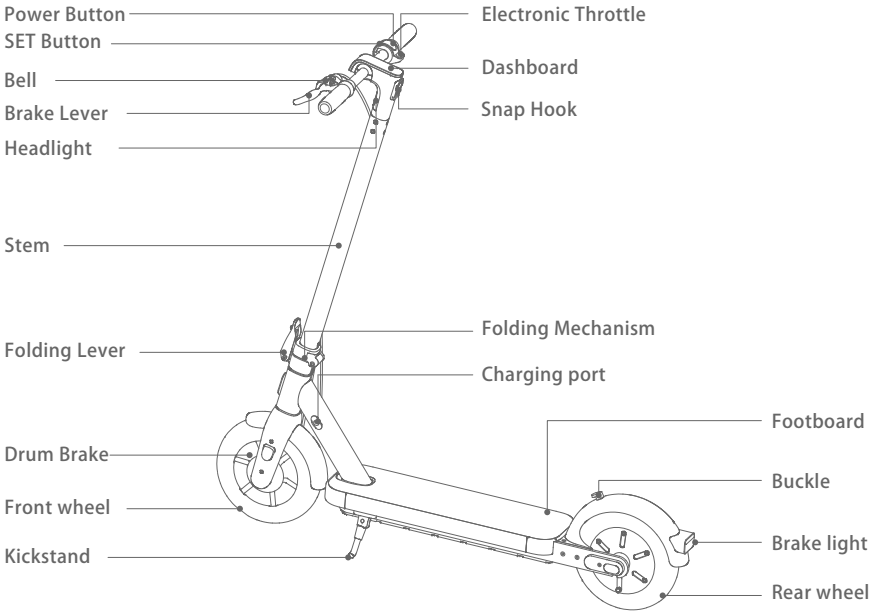

4 Dashboard

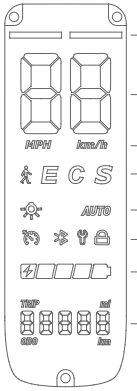

Energy Bar: Indicates the strength of acceleration and braking.

Speedometer: Display the current speed of the scooter, as well as display error codes.

Speed Units: Available in metric and imperial, could be set in the APP.

Speed Modes: Short press the SET button to switch between different modes.

1. Pedestrian mode: Only available in the EU version, for pushing the scooter or riding in crowded areas.
2. ECO mode: Energy saving mode to reach the maximum range, suitable for beginners.
3. Custom mode: Speed limit and acceleration could be customized in the APP.
4. Sport mode: Strong acceleration and maximum speed available, would speed up the battery consumption.

Headlight: Short press the power button to turn the headlight on and off.
AUTO Light Sensor: Double press the power button to turn the AUTO light sensor on and off.

Cruise Control: Long press the SET button to turn the cruise control function on and off. When cruise control function is on, the cruise control icon will be illuminated; maintain the same speed for 5 seconds to start cruising, then the cruise control icon will be flashing; hold the brake lever, or release the throttle and accelerate again to quit cruising.

Bluetooth: Indicates that the scooter has been connected to the mobile device.
Maintenance: Indicates that the scooter has detected an error.
Lock: Lock the scooter motor via the APP.

Battery Level: The battery power is indicated by 5 bars, each representing approximately 20% of a full battery.

Speed limits for different speed modes are as follows:

Speed Mode	US Version	EU Version
Pedestrian Mode	N/A	3.7 mph (6 km/h)
ECO Mode	9.3 mph (15 km/h)	9.3 mph (15 km/h)
Custom Mode	Default 15.5 mph (25 km/h) Could be set between 15km/h and 32km/h via APP	Default 12.4 mph (20 km/h) Could be set between 15km/h and 25km/h via APP
Sport Mode	20 mph (32 km/h)	15.5 mph (25 km/h)

5 Assembling Your Scooter

1. Unfold the handlebar stem and fasten it. Then unfold the kickstand to support the scooter.

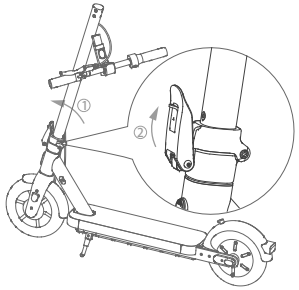

2. Firmly connect the wires inside the handle and the stem. Slide the handle onto the stem. Be aware of the correct orientation.

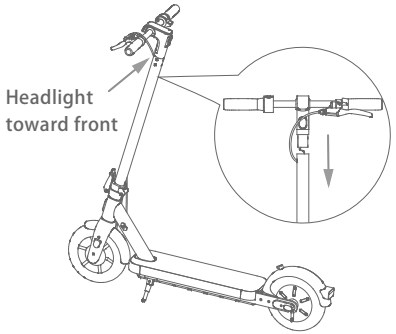

3. Install six screws (two on each side) with the included hex wrench.

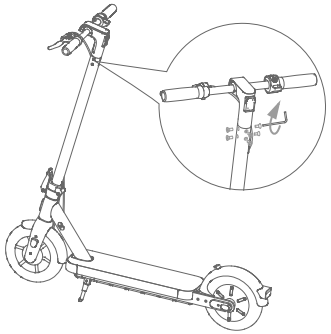

4. Long press the power bottom to verify that your scooter can be powered on

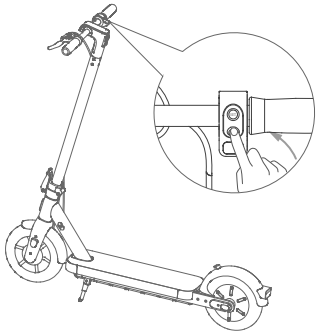

6 Charging

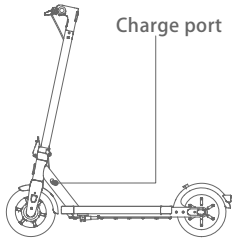

Charging step tips

Open the charge port cover.

Insert the charge plug.

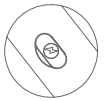

Close the charge port cover when finished.

⚠ WARNING

Do not charge if the charge port or power cord is wet.
Do not charge or use your battery if it is damaged or see trace of water.
Close the charge port cover when not charging.

7 Learning to Ride

⚠ There are safety risks when learning to ride the scooter. You must read the Riding Safety before your first ride.

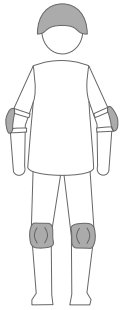

Wear an approved helmet and other protective gear to minimize any possible injury.

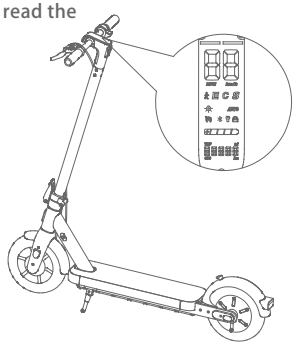

1. Power on the Scooter and check the power level indicator. Charge the Scooter if the battery level is low.

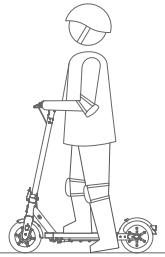

2. Stand on the footrest with one foot and push off with another foot to start gliding.

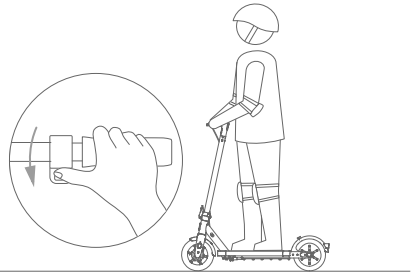

3. Push the scooter forward to reach 2.5 mph (4 km/h), put your other foot on the footrest to keep both feet stable, press the throttle to speed up.
Please note, for your safety, the motor will not engage below 2.5 mph (4 km/h).

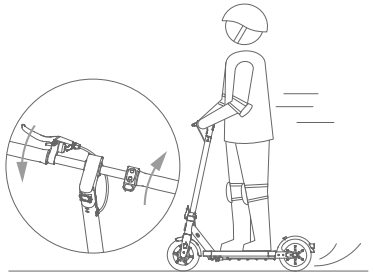

4. Slow down by releasing the throttle; and brake by squeezing the brake lever.

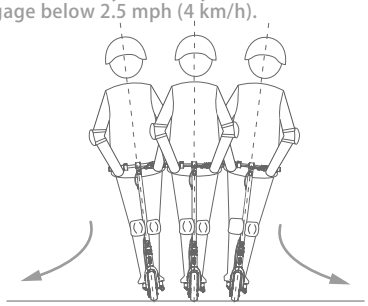

5. To turn, shift your body weight and turn the handle slightly.

⚠ WARNING
When hard braking, you risk serious injury due to loss of traction and falls.
Maintain a moderate speed and look out for potential hazards.

8 Warnings

⚠ DO NOT ride the Scooter in the rain.
DO NOT get wet.

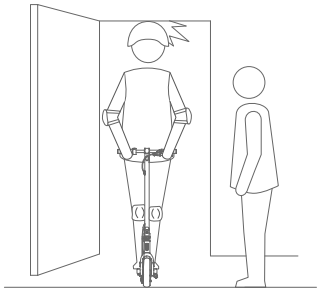

⚠ Watch your head when passing through doorways.

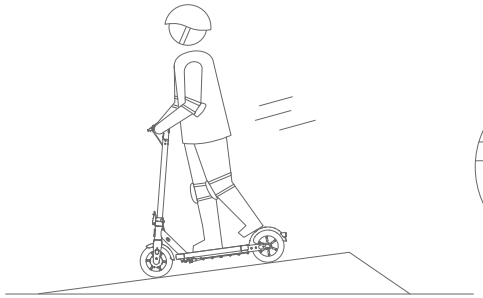

⚠ Do not keep your feet on the rear fender.

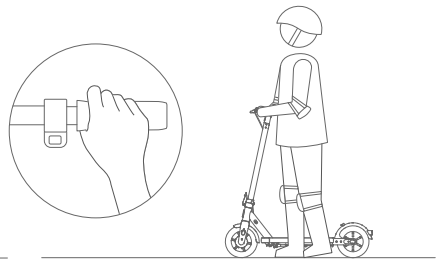

⚠ DO NOT press the throttle when walking with the Scooter.

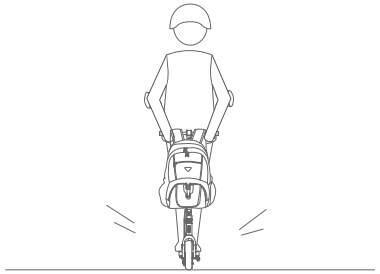

DO NOT carry heavy objects on the handlebar.

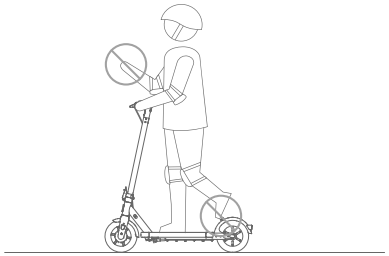

DO NOT ride the scooter with only one foot or one hand.

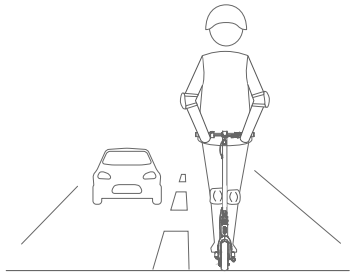

DO NOT ride on public roads, motorways, or highways.

Do not ride through puddles or any other (water) obstacles. In such a case please lower your speed and bypass the obstacle.

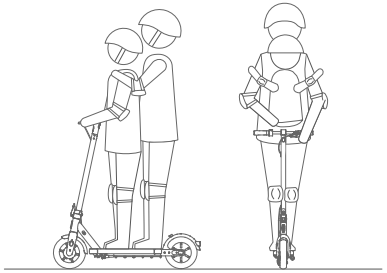

The Scooter is for one rider only. Do not carry any passengers. Do not carry a child. Do not ride when pregnant.

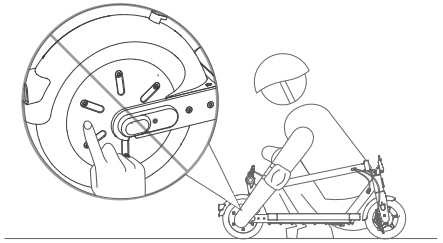

DO NOT touch the hub motor after riding because it can get hot.

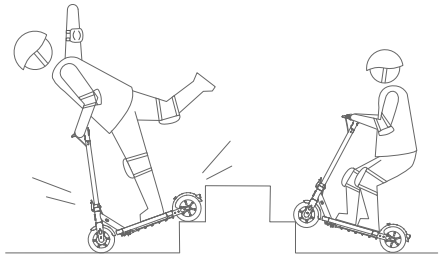

DO NOT ride up and down stairs or jump over obstacles.

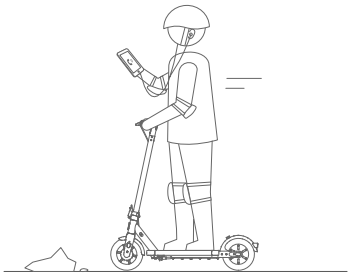

Do not use mobile phone or wear earphones when operating the scooter.

⚠ WARNING

Always keep both hands on the handlebar, or you risk serious injury due to loss of balance and falls.

9 Folding and Carrying

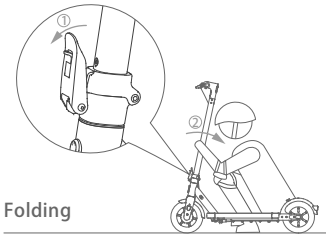

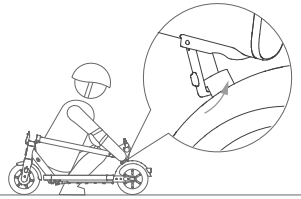

Folding

Turn off your scooter. Release the folding lever and fold the stem down.

Align the snap hook and the buckle and hook them.

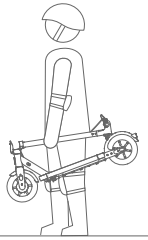

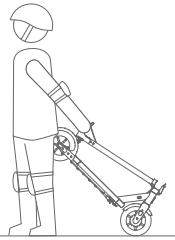

Carrying

When your scooter is folded up, carry it by holding the stem, or drag it by grabbing the handlebar.

10 Maintenance

Cleaning and Storage

Use a soft, wet cloth to wipe the scooter clean. The scooter need to be dry before storage.

NOTE

Do not wash your scooter with alcohol, gasoline, acetone, or other corrosive/volatile solvents. These substances may damage the appearance and internal structure of your scooter. Do not wash your scooter with a power washer or hose

⚠ WARNING

Make sure the scooter is powered OFF, the power cord is unplugged, and the rubber cap on the charge port is tightly sealed before cleaning; otherwise you may damage the electronic components.

Store your scooter in a cool, dry place. Do not store it outdoors for extended periods of time. Exposure to sunlight and temperature extremes (both hot and cold) will accelerate the aging process of the plastic components and may reduce battery life.

Tire Pressure

Inflate tires to 30 psi (210kPa). Inflate both tires equally.

Battery Pack Maintenance

Do not store or charge the battery at temperatures outside the stated limits (see Specifications). Do not puncture the battery. Refer to your local laws and regulations regarding battery recycling and/or disposal.

NOTE

Typically, a fully charged battery should retain power for 120-180 days. A low-power battery should retain power for 30 – 60 days. Remember to charge the battery after each use. Completely draining the battery may cause permanent damage to the battery.

Electronics inside the battery record the charge-discharge condition of the battery; damage caused by over-charging or under-charging will not be covered by the Limited Warranty.

⚠ WARNING

Do not attempt to disassemble the battery. Do not touch battery contacts. Do not dismantle or puncture the casing. Keep the battery contacts away from metal objects to prevent short circuit. Risk of fire and electric shock. No user serviceable parts. Do not charge or use your battery if it is damaged or see trace of water

⚠ WARNING

Do not ride when the ambient temperature is outside the machine operation temperature (see specifications) because low/high temperature will limit the maximum power/torque. Doing so could cause personal injury or property damage due to slips or falls.

11 Specifications

	Model No.	S40	S65
Dimensions	Unfold: Length x Width x Height	45.5 × 20 × 46.8 in (1155 × 510 × 1190 mm)	
	Fold: Length x Width x Height	45.5 × 20 × 19.1 in (1155 × 510 × 486 mm)	
Weight	Net Weight	Approx. 36.2 lbs (16.4kg)	Approx. 38.8 lbs (17.6kg)
Rider	Max. Payload	265 lbs (120 kg)	
	Recommended Age	14+ years old	
	Required Height	3'11"–6'6" (120–200 cm)	
Machine Parameters	Typical Range*	Approx. 25 miles (40 km)	Approx. 40 miles (65 km)
	Max. Speed	US Version: 20 mph (32 km/h)	
		EU Version: 15.5 mph (25km/h)	
	Max. Uphill Slope	Approx. 20%	Approx. 22%
	Operating Temperature	14–104°F (-10–40°C)	
	Storage Temperature	-4–122°F (-20–50°C)	
	IP Rating	IPX5	
Battery	Nominal Voltage	36 VDC	
	Nominal Capacity	360 Wh	540 Wh
	Max. Charging Voltage	42 VDC	
	Charging Temperature	32–104°F (0–40°C)	
	Duration of Charging	6.5 h	7.5 h
Motor	Nominal Power	400 W	
	Max. Power	700 W	800 W
Charger	Input Voltage	100–240V 50/60Hz	
	Output Voltage	42 VDC	
	Output Current	1.5 A	2A
	Headlight	2.5 W LED headlight	
Features	Brake Light	LED rear light	
	Brakes	Front drum brake + rear electric brake	
	Tires	10" pneumatic tires	
	Riding Modes	Pedestrian mode (EU only), ECO mode, customizable mode, sport mode	

*Typical Range: tested while riding under full battery, 165.3 lbs (75.0 kg) load, 77° F (25° C), 15km/h speed on average on pavement.

12 Blutron APP

1. Go to the Google Play Store (Android) or the Apple App Store (iOS) and search "Blutron" to download. Install the App and register/login.

2. Power on the scooter. Please make sure to turn on the Bluetooth function on your mobile device. In the APP, Click "Add Device" to connect to your scooter. When the connection is successful, the scooter will beep and the Bluetooth icon will be illuminated on the dashboard.

3.When the scooter successfully connects to your mobile device, it's also bound to your Blutron account. If you need to share or transfer the scooter to others, with full APP function, you need to click the info button on the upper right corner of the APP main interface, select "Share Device" or "Remove Device", then others can connect the scooter to their own Blutron account.

4. The APP main interface will display battery level, total and single mileage, vehicle and battery status. You can lock the scooter, turn on/off cruise control, set speed limit and acceleration for the custom mode, set energy recovery level, and explore more functions in the Blutron APP.

13 Contact

Contact Blutron or your local dealer/distributor if you experience issues relating to riding, maintenance and safety, or errors/faults with your scooter.

Blutron Power Inc.

E-mail Service: support@blutronpower.com

Website: www.blutronpower.com

Have your scooter serial number on hand when contacting Blutron. You can find your serial number on the underside of your scooter.

14 Limited Warranty

BLUTRON ONE Electric Scooter Limited Warranty

This is the manufacturer's limited warranty ("Limited Warranty") for the Blutron Scooter ("Product"). This Limited Warranty describes the service available to you in the event your Product requires warranty service, and you may have additional protections under your local laws.

THIS WARRANTY GIVES YOU SPECIFIC LEGAL RIGHTS, AND YOU MAY ALSO HAVE OTHER RIGHTS WHICH VARY FROM COUNTRY TO COUNTRY AND STATE TO STATE.

This sheet and the original purchase receipt for the purchase of your Product are the documents defining the Limited Warranty. Please retain this document and the original purchase receipt to preserve your warranty service.

Record your Product's Serial Number

Record your Product's Serial Number below. You can find the Serial Number on the exterior of the shipping box, on the bottom of the Product.

Serial Number Here

Contacts

Service E-mail: support@blutronpower.com
Visit www.blutronpower.com for the latest contact information.

1. Limited Warranty Period

This Limited Warranty covers all defects in material and workmanship of the Product arising or occurring as a result of your normal and ordinary use of the Product. In the event a defect covered by this Limited Warranty occurs, Blutron will repair or replace your Product in accordance with the terms of this Limited Warranty. The applicable period for the Limited Warranty begins from the original purchase date of the Product from an authorized Blutron Distributor or Dealer, and applies to the Product in the following ways:

Name of the Component	Limited Warranty Period
Vehicle Body (Metal Components): Frame assembly, stem and folding mechanism assembly, stem top (goose head), handlebar, front fork, front wheel hub with drum brake assembly	1 year
Electronic Components: Battery assembly, controller assembly, rear wheel hub motor, dashboard assembly,battery charger, charging port, electronic throttle, brake lever with bell, brake cable, headlight, rear light	180 days
Components Subject to Wear: Tire and inner tube, front / rear mudguard, front/ rear fork cover, frame front/ rear cover, foot mat, handlebar grips, dashboard cover, kickstand, folding snap hook and buckle, cable plugs	90 days

2. Limited Warranty Service Process

If you discover what you believe is a defect for your Product, please contact Blutron at support@blutronpower.com. Blutron's technical support personnel are available to assist you in diagnosing and fixing any problems you may encounter in the use of your Product. In the event we cannot help you fix the problem, you may be entitled to warranty service under this Limited Warranty.
In order to submit your Product for warranty service pursuant to this Limited Warranty, you will be asked to provide Blutron with (i) proof of the original purchase of the Product from Blutron dealers, (ii) the Product's serial number, and (iii) a description of the defect if applicable. Upon verification of your eligibility, you will need to provide your name, mailing address and contact telephone number in order to receive a return materials authorization ("RMA") number, or the replacement parts. Blutron dealer or an authorized service provider must receive your defective Product within thirty (30) days from Blutron's issuance of an RMA to you.

You will be responsible for the cost of shipping and insuring the shipment of your Product to Blutron, and you assume the risk of loss in the event your Product is lost or damaged during shipment from you to Blutron. You must include your defective Product within the original packaging or Blutron approved packaging, which will be provided at a cost, for the shipment of the Product to Blutron. Blutron is not responsible for any damages caused by your improper packaging or shipment of the Product.
An authorized service provider or Blutron dealer will conduct an inspection of your Product. If Blutron reasonably determines that the problem is not covered under the Limited Warranty, Blutron will notify you and inform you of service or replacement alternatives that are available to you on a fee basis, or Blutron will return your Product to you unrepaired, and in such instance, you will be responsible for the cost of shipping and insuring the shipment of your Product from Blutron to you.
For eligible warranty claims, Blutron will service defective Product with new or reconditioned parts of same or similar style at no cost to you for the service. For eligible warranty claims, Blutron will pay reasonable return shipping charges for the return of the Product to you.

3. Limited Warranty Eligibility

3.1. Your request for service must be received by Blutron within the Limited Warranty Period as described above, and Blutron must receive your Product in accordance with the Limited Warranty Service Process defined above.
3.2. Your Product must be purchased from an authorized dealer.
3.3. You must retain the original purchase receipt and your Limited Warranty, and provide this documentation to Blutron to verify your warranty eligibility.
3.4. This Limited Warranty describes the service available to you in the event your Product requires warranty service.
3.5. Your Product must have the serial number clearly legible, unobscured, uneffaced and unmodified.
3.6. Your Product must have its tamper-resistant seals in place and unmodified.

4. Limited Warranty Exclusions

This Limited Warranty describes the service available to you in the event your Product requires warranty service, and you may have additional protections under your local laws. This Limited Warranty does not cover and excludes damage to your Product:
4.1. Caused by abuse, misuse, neglect or commercial use.
4.2. Caused by improper charging, storage, or operation, including, without limitation, use contrary to the users' materials, use exceeding specified height, weight and age limits, use on stairs, walls and curbs, or any extreme sport or exhibition use.
4.3. Caused by accident, collision, riding over obstacles, racing, fire, water submersion, high pressure water spray, freezing, earthquake, dropping, severe oxidation, or chemical solvent corrosion.

4.4. Caused by any repair that was unauthorized by Blutron.
4.5. Caused from improper packaging or mishandling during shipment to the warranty-service provider.
4.6. That is cosmetic, including, scratches, dents and the removal of protective coatings that are designed to diminish over time, unless such damage occurred due to a defect in materials.
4.7. Caused by the use of the Product with, or any modification to the Product using, any third party product, component or accessory that is not sold by Blutron.
4.8. That does not arise from Blutron's product-design, technology, manufacturing or quality.

5. Liability Disclaimer and Limitation

Blutron does not assume, or authorize anyone to assume on its behalf, any other obligation or liability in connection with a Product, its component parts, accessories, service repair, or this Limited Warranty. Blutron is not responsible for any loss of use of a Product, its component parts, accessories, or for any inconvenience or other loss or damage which might be caused from any defect in a Product, its component parts, accessories, service repair, or for any other incidental or consequential damages the purchaser may have as a result of any defect in a Product, its component parts, accessories, or service repair.
THIS LIMITED WARRANTY IS THE ONLY WARRANTY APPLICABLE TO PRODUCT AND ITS COMPONENT PARTS, ACCESSORIES, AND SERVICE REPAIR. BLUTRON AND THE RESPECTIVE AFFILIATED COMPANIES DISCLAIM ALL OTHER WARRANTIES, EXPRESS OR IMPLIED, INCLUDING IMPLIED WARRANTIES OF MERCHANTABILITY AND FITNESS FOR A PARTICULAR PURPOSE, OTHER THAN THOSE WARRANTIES IMPLIED BY AND INCAPABLE OF EXCLUSION, RESTRICTION, OR MODIFICATION UNDER APPLICABLE LAW. ANY SUCH IMPLIED WARRANTIES WHICH MAY BE REQUIRED BY LAW AND ARE NOT DISCLAIMED HEREBY ARE LIMITED, TO THE EXTENT ALLOWED BY LAW, TO THE APPLICABLE PERIOD OF THIS LIMITED WARRANTY, OR TO THE APPLICABLE TIME PERIOD PROVIDED BY THE APPLICABLE COUNTRY/STATE LAW, WHICHEVER PERIOD IS SHORTER.
BLUTRON'S TOTAL AND AGGREGATE LIABILITY FOR ALL CLAIMS, JOINT AND SEVERALLY, ARISING HEREUNDER AND ANY AND ALL APPLICABLE WARRANTIES AT LAW ARE LIMITED TO THE REPAIR OR REPLACEMENT OF ANY DEFECTIVE PRODUCT, AS DETERMINED IN BLUTRON'S DISCRETION, AND ALL INCIDENTAL AND CONSEQUENTIAL DAMAGES ARE HEREBY EXCLUDED, UNLESS SUCH LIMITATIONS AND EXCLUSIONS ARE PROHIBITED BY APPLICABLE LAW.

6. Applicable Law and Disputes

Any and all claims or disputes of whatever nature arising out of or otherwise relating to this warranty shall be governed by and construed in accordance with the laws of the United States with the exclusion of its conflicts of law provisions and the UN Convention on the International Sale of Goods. The sole and exclusive venue for and jurisdiction over any such claim or dispute shall be the Courts in California, USA. The latter choice of law and forum applies only insofar as this does not conflict with any mandatory consumer laws in your jurisdiction.

FCC Statement

This equipment has been tested and found to comply with the limits for a Class B digital device, pursuant to part 15 of the FCC rules. These limits are designed to provide reasonable protection against harmful interference in a residential installation. This equipment generates, uses and can radiate radio frequency energy and, if not installed and used in accordance with the instructions, may cause harmful interference to radio communications. However, there is no guarantee that interference will not occur in a particular installation. If this equipment does cause harmful interference to radio or television reception, which can be determined by turning the equipment off and on, the user is encouraged to try to correct the interference by one or more of the following measures:

-Reorient or relocate the receiving antenna.

-Increase the separation between the equipment and receiver.

-Connect the equipment into an outlet on a circuit different from that to which the receiver is connected.

-Consult the dealer or an experienced radio/TV technician for help.

To assure continued compliance, any changes or modifications not expressly approved by the party.

Responsible for compliance could void the user's authority to operate this equipment. (Example- use only shielded interface cables when connecting to computer or peripheral devices).

This equipment complies with Part 15 of the FCC Rules. Operation is subject to the following two conditions:

(1) This device may not cause harmful interference, and

(2) This device must accept any interference received, including interference that may cause undesired operation.

RF warning statement:

The device has been evaluated to meet general RF exposure requirement. The device can be used in portable exposure condition without restriction.

The users manual or instruction manual for an intentional or unintentional radiator shall caution the user that changes or modifications not expressly approved by the party responsible for compliance could void the user's authority to operate the equipment.

In cases where the manual is provided only in a form other than paper, such as on a computer disk or over the Internet, the information required by this section may be included in the manual in that alternative form, provided the user can reasonably be expected to have the capability to access information in that form.

ISED Statement

English: This device contains licence-exempt transmitter(s)/receiver(s) that comply
with Innovation, Science and Economic Development Canada's licence-exempt RSS(s). Operation is subject to the following two conditions:

(1) This device may not cause interference.

(2) This device must accept any interference, including interference that may cause
undesired operation of the device.

The digital apparatus complies with Canadian CAN ICES-3 (B)/NMB-3(B).

French: Cet appareil contient des émetteurs/récepteurs exempts de licence qui sont conformes aux RSS exemptés de licence d'Innovation, Sciences et Développement économique Canada.

L'exploitation est soumise aux deux conditions suivantes :

(1) Cet appareil ne doit pas provoquer d'interférences.

(2) Cet appareil doit accepter toute interférence, y compris les interférences susceptibles de provoquer un fonctionnement indésirable de l'appareil.

l'appareil numérique du ciem conforme canadien peut - 3 (b) / nmb - 3 (b).

This device meets the exemption from the routine evaluation limits in section 2.5 of
RSS 102 and compliance with RSS 102 RF exposure, users can obtain Canadian Information
on RF exposure and compliance.

cet appareil est conforme à l'exemption des limites d'évaluation courante dans la section 2.5 du cnr - 102 et conformité avec rss 102 de l'exposition aux rf, les utilisateurs peuvent obtenir des données canadiennes sur l'exposition aux champs rf et la conformité.

This equipment complies with Canada radiation exposure limits set forth for an uncontrolled environment.

Cet équipement est conforme aux limites d'exposition aux rayonnements du Canada établies pour un environnement non contrôlé.

This equipment should be installed and operated with minimum distance 5mm between the radiator & your body.

Cet équipement doit être installé et utilisé à une distance minimale de 5mm entre le radiateur et votre corps.