S307

Licensed Battery-Powered Ride-on

Styles and colo(u)rs may vary

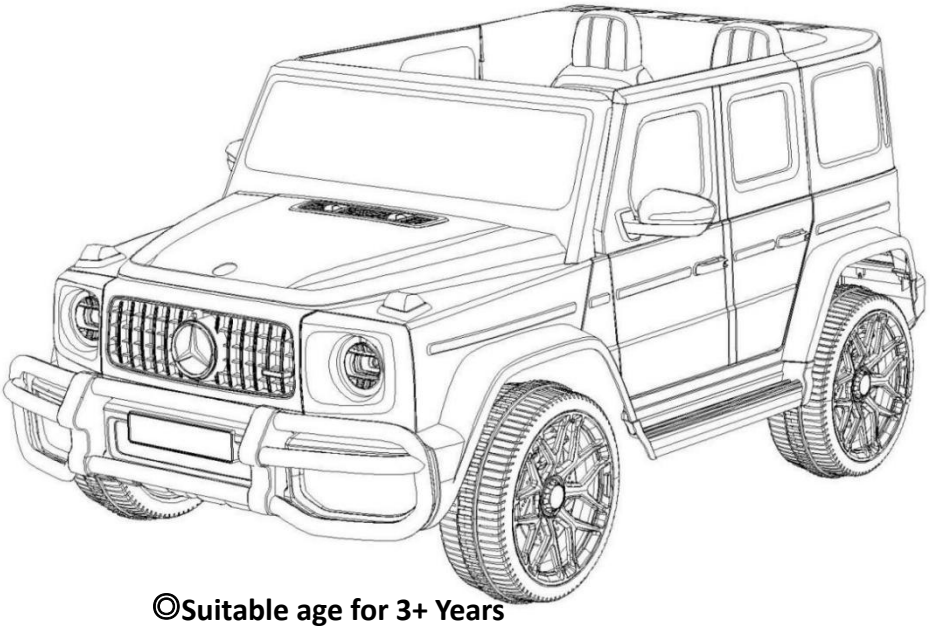

◎Suitable age for 3+ Years
◎Maximum user weight: 59kg
◎Adult assembly required

OWNER'S MANUAL

with Assembly Instructions

Read and understand this entire manual before using!

Please keep this manual for future reference as it contains important information.

Before first time use, charge the battery for at least 4-6 hours.

NO:1

On the purchase of your new Ride-On

"Mercedes-Benz", , and the design of the enclosed product are subject to intellectual property protection owned by Daimler AG. They are used by Pinghu Little Sun Childs Vehicles CO.,LTD

Trademarks, design patents and copyrights are used with the approval of **Mercedes- AMG G63**

Specification

Suitable age:	37-96months
Battery：	12V7AH*1 or 12V10AH*1 or 24v5AH*1or 24V7AH*1
Charge time:	8~12 hours
Load capacity:	Under 59kg
Size of car:	143×82×64CM
Speed:	3~5 km/hr
Battery life:	300 recharges

BATTERY INFORMATION

- Non-rechargeable batteries are not to be recharged.
- If removable rechargeable batteries are used, the are only to be charged under adult supervision.
- Remove rechargeable batteries from the product before charging.
- Do not mix old and new batteries. Do not mix different types of batteries: alkaline, standard (carbon-zinc) or rechargeable (nickel-cadmium).
- Insert batteries as indicated inside the battery compartment, anode to anode, cathode to cathode.
- Remove batteries during long periods of non-use. Always remove exhausted batteries from the product. Battery leakage and corrosion can damage this product. Dispose of batteries safely.
- Never short circuit the battery terminals

Parts List2

Number	Name	Quantity	
		Two motor	Four motor
1	Front bumper/Front bumper trim	1/2	1/2
2	Windshield	1	1
3	Seat	2	2
4	Steering wheel	1	1
5	Car window	2	2
6	Reflector	2	2
7	Trunk	1	1
8	Tailstock	1	1
9	Rear bumper	1	1
10	Rear axle	1	1
11	Driving motor	2	4
12	Wheel	2/2	2/2
13	Wheel cap	4	4
A	Ø12 gasket	6-8	6-8
B	M10 nut	4-5	4-5
C	M4×12 screw	16	16
D	M4×16 screw	17	17
E	M5 screw	1	1
F	M5 nut	1	1

Assembly tools required:

Screwdriver
(not included)

Screwdriver
(included)

Parts Diagram 3

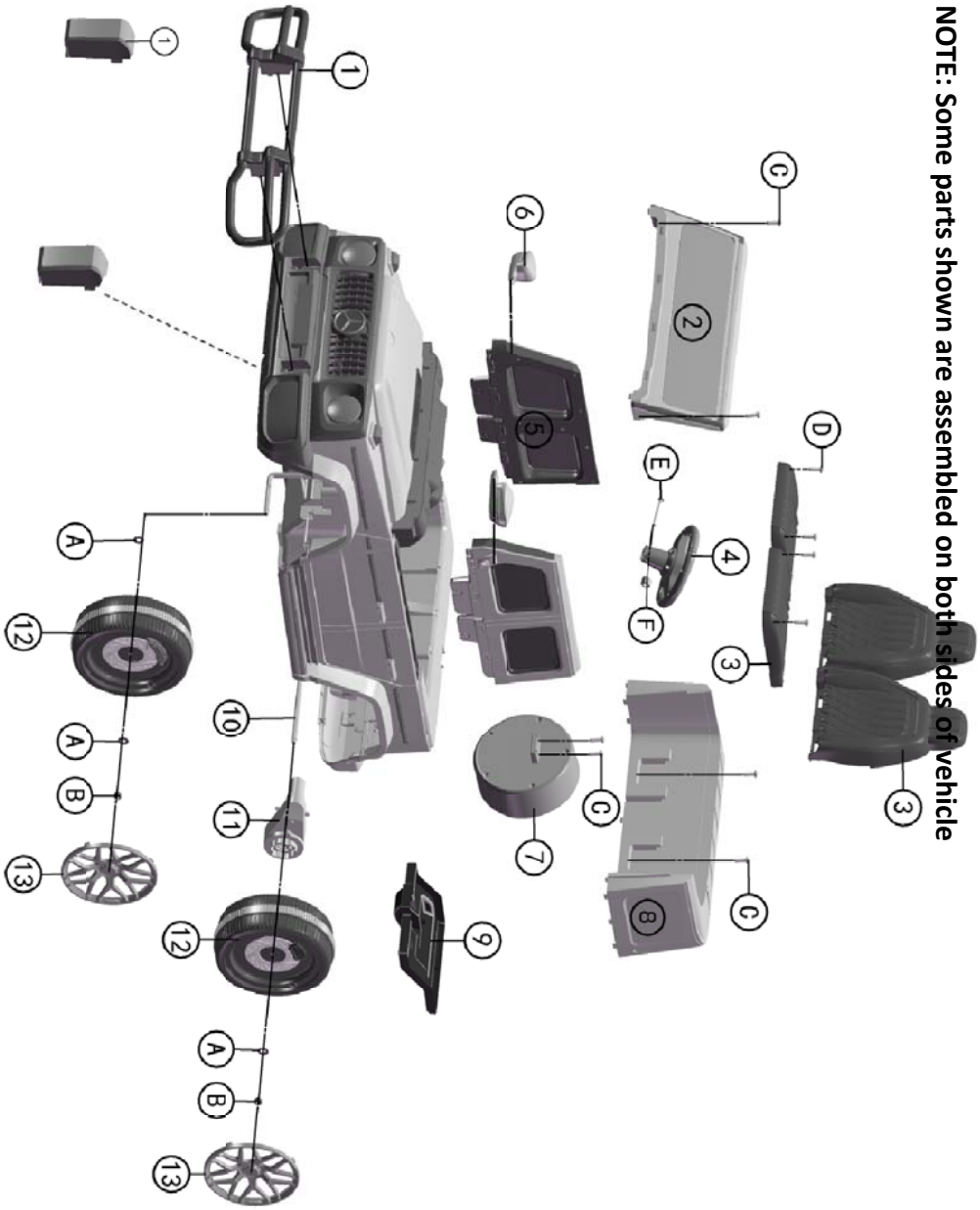

NOTE: Some parts shown are assembled on both sides of vehicle

PREVENT INJURIES AND DEATHS:
●NEVER LEAVE CHILD UNATTENDED.ADULT DIRECT SUNPERVISION IS REQUIRED. Always keep child in view when child is in vehicle.
● This toy should be used with caution since skill is required to avoid falls or collisions causing injury to the user or third parties.
● Protective equipment should be worn.
● Never use in roadways,near cars,on or near steep inclines or steps,swimming pools or other bodies of water.
● Always wear shoes,always sit on the seat.

CHOKING HAZARD! NOT suitable for children under 37 months.
●ADULT ASSEMBLY REQUIRED.

Rules for Safe Riding

● Keep children within Safe Riding Areas:
Never use in roadway near motor vehicles, on lawn space, on or near steep inclines or steps swimming pools or other bodies of water;
● Use the toy only on flat surfaces. Such as inside your house, garden or playground.
● Never use in the dark .A child could encounter unexpected obstacles and have an accident.Operate the vehicle only in the daytime or a well-lit area.
● It is prohibited to change the circuit or add other electric parts
● Inspect wires and connections of the vehicle periodically.
● Do not let any child touch the wheels or be near them when the car is moving.
● This vehicle has adjustable play seat belts.Please instruct children how to tie the safety belt before using ;guarantee the security.

[redacted]

Install front bumper trim (Optional)

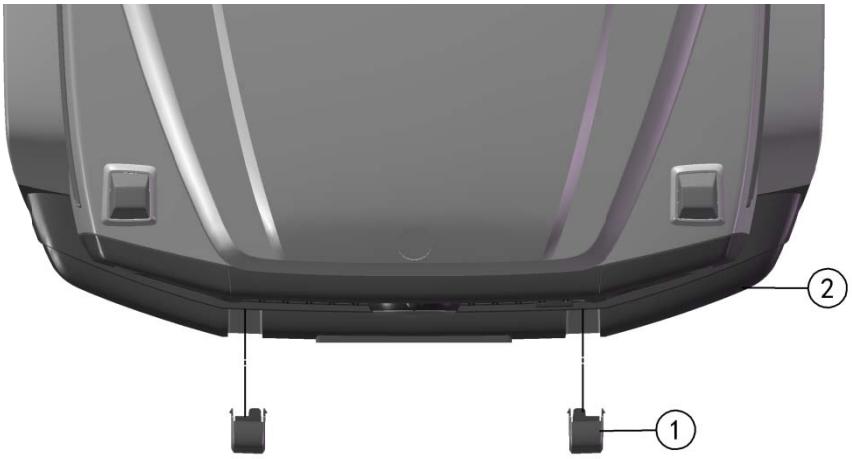

Insert the front bumper trim into the slots.

Operation Instruction 6

Install the front bumper (optional)

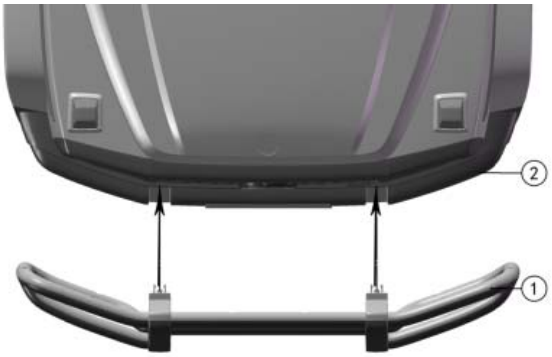

1. Insert the buckle of the front bumper into the slot as shown in the arrow. Turn the body upside down;
2. Fix the the front bumper and the front bar as shown in the arrow with M4*12 screw (short).

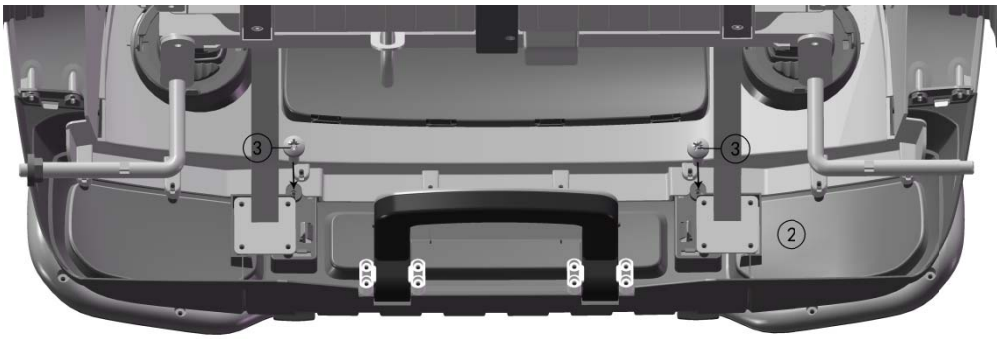

Front wheel

Gear wheel

Operation Instruction 7

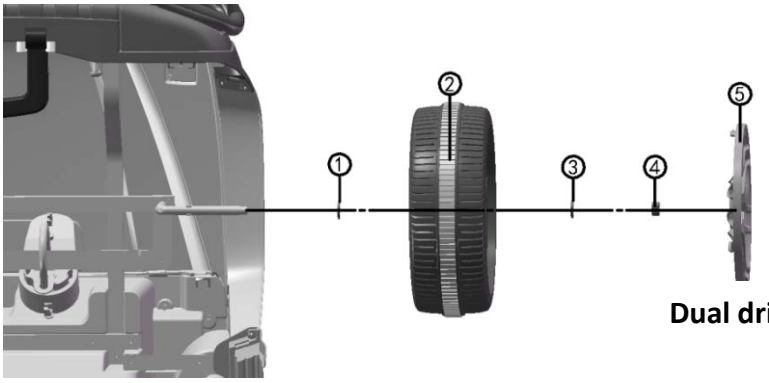

Dual drive

Turn the car back up

1. Put an 12 gasket into the front axle
2. Install the front wheel；
3. Put another 12 gasket；
4. Insert the M10 nut into the hole of the front axle and fix the front wheel.；
5. Install the wheel hub；

Use the same way to install the front wheel on the other side

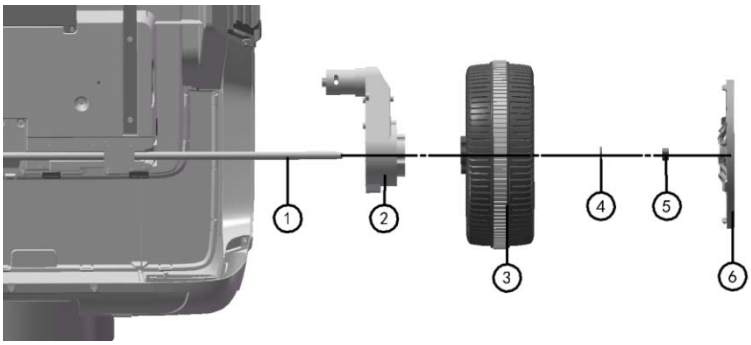

1. Put the rear axle in as shown；
2. Install the driving motor into the rear axle, connect the motor wire plug with the plug in the motor clamp port, and insert the motor into the clamp slot.；
3. Put the driving wheel on the rear axle and fixed it；
4. Put an 12gasket into the rear axle；
5. Insert the M10 nut into the hole of the rear axle and fix the rear wheel Install the wheel hub；
6. Install the wheel cap to the wheel

Use the same way to install the wheel on the other side

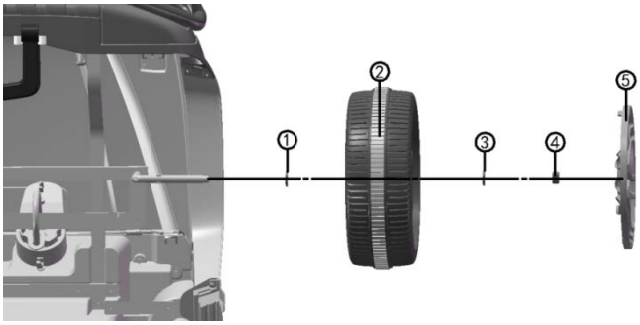

Operation Instruction 8

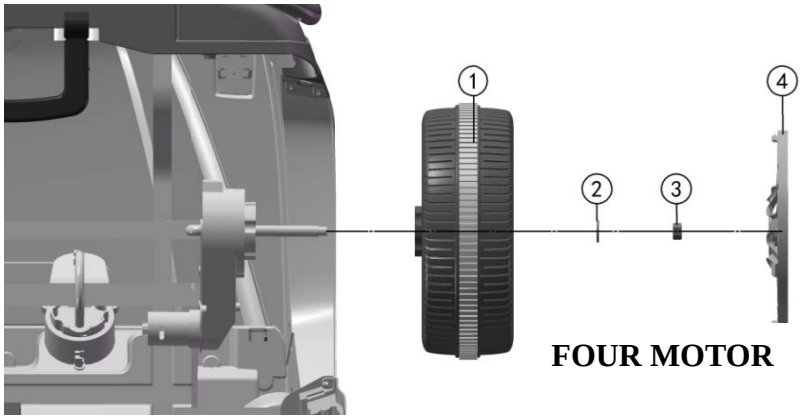

1.install the driving wheel on the rear axle to ensure that the Connectors on the driving wheel fits into the motor
2.Put an 12 gasket into the rear axle
3.Use a wrench to fix the driving wheel with M10 nut
4.Install the wheel hub；
Use the same way to install the front wheel on the other side

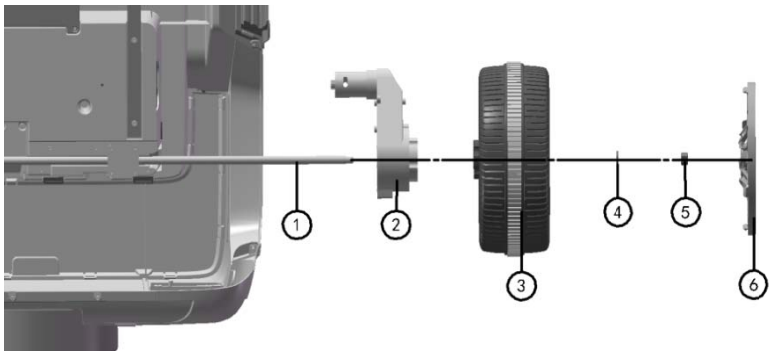

1.Put the rear axle in as shown；
2.Install the driving motor into the rear axle, connect the motor wire plug with the plug in the motor clamp port, and insert the motor into the clamp slot.；
3.Put the driving wheel on the rear axle and fixed it；
4.Put an 12gasket into the rear axle；
5.Insert the M10 nut into the hole of the rear axle and fix the rear wheel Install the wheel hub；
6.Install the wheel cap to the wheel
Use the same way to install the wheel on the other side

Operation Instruction 9

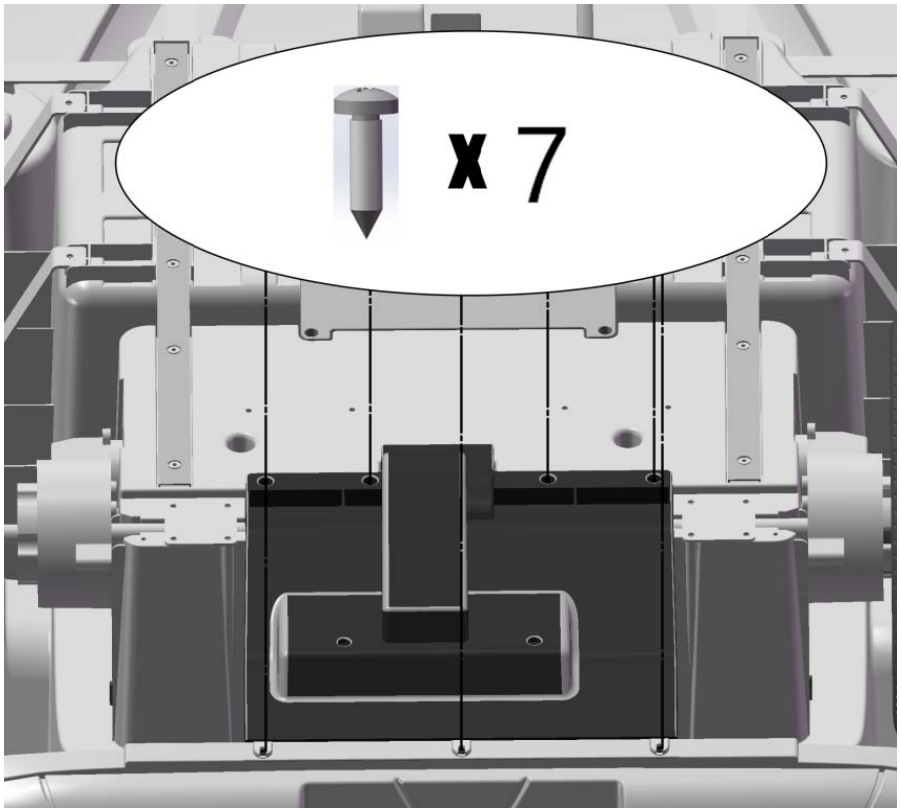

Place the rear bracket as shown and fix it with the M4 * 12 screw(short):

Operation Instruction 10

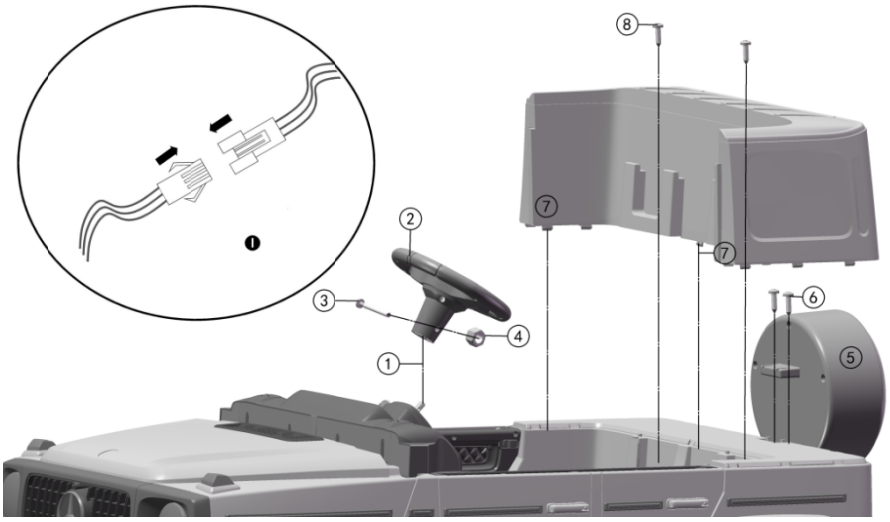

Turn the car back up

1. Connect the music plug-in on the steering wheel with the music plug-in beside the steering rod, and then place the plug-in into the hole under the steering rod of the dashboard;

2. Insert the steering wheel into the end of the steering rod ;

3.Fixed it with M5 screw；

4.Put on the nut M5 in the other side；

5.Install the trunk on the back of car body as picture shown ；

6.Fixed it with M4*12 screw(short)；

7.Fixed the tailstock into the back of car body ；

8.Fixed it with M4*12 screw(short)

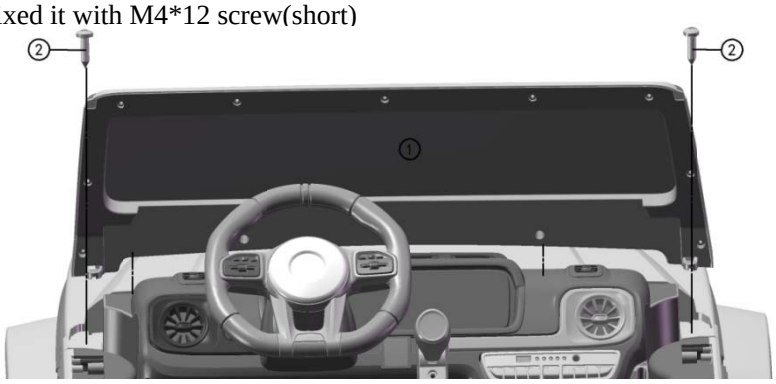

1.Clip the windshield into the hole of the car body

2.Fixed it with M4*12 screw(short)；

Operation Instruction 11

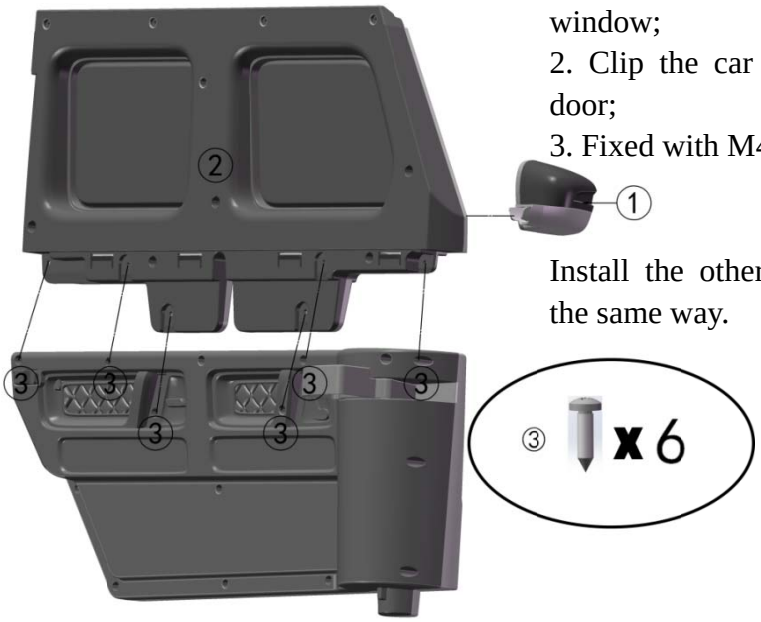

1. Clip the reflector into the car window;
2. Clip the car window into the door;
3. Fixed with M4*16 screw(long).

Install the other side window in the same way.

1.Fix the upper cover seat into the corresponding buckle groove
2.Clip the lower cover cushion flat into the upper cover cushion chuck
3.Fixed it with M4*12 screw

Function Instruction 12

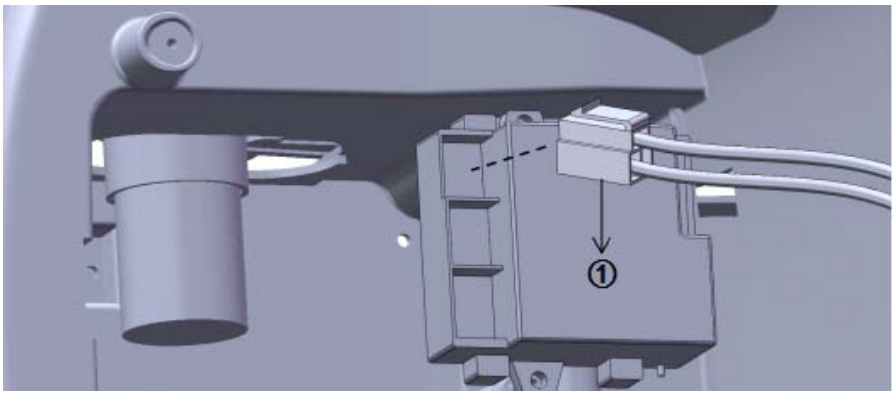

1.Find out the main power line and insert the plug-in of the power line into the corresponding socket of the receiver.

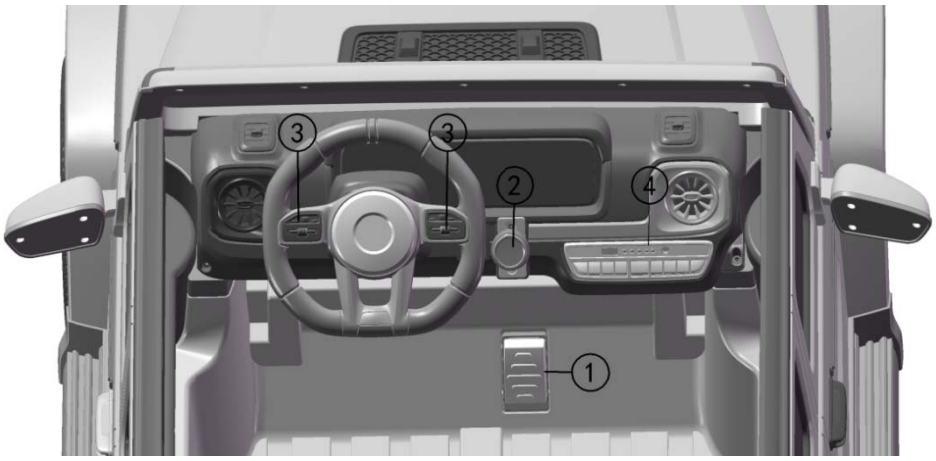

1）Foot pedal: press down the pedal, the vehicle moves, lifting the foot to release the pedal, the vehicle will slowly brake;

2）Shift Switch: Change the direction of the car , Forward-stop-Backward

3）Horn sound button: Press it for horn sounds

4）Control board；

5)USB: need connect your USB device to play music ；

6)Power display: Clearly see the battery power, in order to charge；

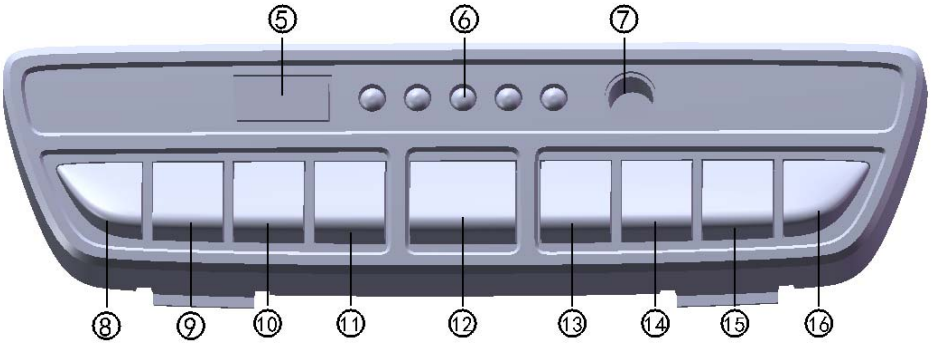

7)Socket: charge；

8)Light button : Turn on or off the light；

9)Last song： Switch songs, and long press will decrease volume；

10)Music Button: play music；

11)Next song: Switch songs, and long press will increase volume；

12)Power button: Long Press it 3 seconds, Turn the vehicle on and off; Short press it for 1 second , stop the music from the car

13)High speed button: change the speed of the car more quickly

14)Low speed button: change the speed of the car more slowly；

15)Bluetooth speaker: Press this button, connect the mobile phone and Bluetooth in the car , then the car can play music from your mobile phone

16)FM: FM radio

BATTERY WARNING!

- Non rechargeable batteries can not be charged.
- Only an adult can charge and recharge the battery.
- Different types of batteries can not be mixed.
- Battery need put in the right polarity.
- The exhausted battery should be removed from the toy.
- Power terminals must not be short circuited.
- Do not provide dry batteries.

Remote Control 14

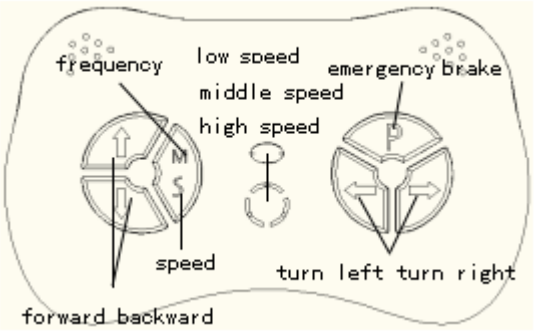

WARNING!
Only allow adult to use remote control, can not let the children touch

Operation Manual : For the first time to use (Or Replace the battery)Need to frequency bind

- Take out the remote control, lift the battery compartment door on the back of the controller and insert two AAA batteries. install the battery
- Long press on the frequency key(M) 2-4 seconds, Low speed LED light flashing
- Turn on the power of the car, Low speed LED light keep flashing to long lighting, then frequency bind succeed
- If the frequency bind failed (Low speed LED light flashing) , remove the battery and repeat steps 1~3
- remote control without operation after 10 seconds, indication light will off into power saving mode
- Button Description: △ forward ▽backward ◁ turn left ▷ turn right S: Speed , P: emergency brake, Press it and the running function will fail, press again, it release

NOTE:1.This remote control has energy saving mode , No operation for about 10 seconds ,lights off and remote control shut off . When you need use remote control ,please press on any button ,it will work again.

Charge 15

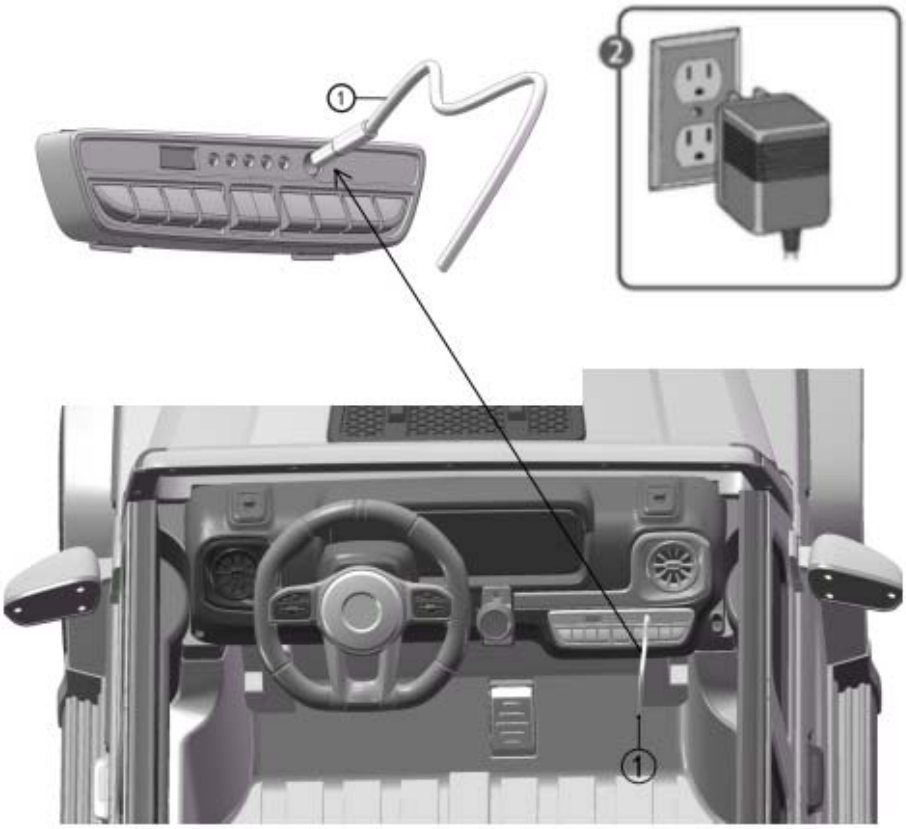

1.Insert the charger jack into the charging hole of the car.
2.Plug the charger plug into the stable matching AC power supply as shown in the picture.
ATTENTION: Only an adult can charge and recharge the battery!

Charging 16

ONLY AN ADULT CAN CHARGE AND RECHARGE THE BATTERY!

WARNING!

- **PREVENT FIRE AND ELECTRIC SHOCK:**

- Use the only rechargeable battery and charger supplied with your vehicle. NEVER substitute the battery or charger with another brand. Using another battery or charger may cause a fire or explosion.
- Do not use the battery or charger for any other product. Overheating, fire or explosion could occur.
- NEVER modify the electric circuit system.. Tampering with the electric system may cause a shock, fire or explosion or my permanently damage the system.
- Do not allow direct contact between battery terminals. Fire or explosion can occur.
- Do not allow any type of liquid on the battery or its components.
- Explosive gasses are created during charging. Do not charge near or flammable materials. Charge the battery in a well-ventilated area ONLY.
- rechargeable batteries are only to be charged under adult supervision

rechargeable batteries are to be removed from the toy before being charged

Must confirm before using that following work which is already finished:

Important! Before using the vehicle for the first time, the battery needs to be charged for 4 to 6 hours , no more than 15hours. Only an adult can charge and recharge the battery.

Check all the screws, cap nuts and protective coverings regularly and tighten as required.

Rules for Safe Riding

- Keep Children within safe riding areas:

Never use in roadway, near motor vehicles, on lawn space , on or near steep inclines or steps swimming pools or other bodies of water;

- Use the toy only on flat surfaces. Such as inside your house, garden or playground
- Never use in the dark . A child could encounter unexpected obstacles and have an accident. Operate the vehicles only in the daytime or well-lit area.
- It is prohibited to change the circuit or add other electric parts.
- Inspect wires and connections of the vehicle periodically
- Do not let any child touch the wheels or be near them when the car is moving.

Battery Replacement 17

Protector

This product is equipped with self-reset protector, when overloaded or improper use, self-reset protector will automatically cut off the power supply for 15-20 seconds, and then restart. The self reset protector of the car is installed under the seat.

TO avoid losing power,follow these guidelines:

- Do not overload the vehicle,maximum 59KGS.
- Do not tow anything behind the Vehicle.
- Do not immerse water or other liquids in electrical components,such as wiring,batteries,etc
- Do not tamper with the electric system.replacement must be conducted by professionals or under the guidance of technicians.

BATTERY REPLACEMENT AND DISPOSAL

- Check the charger's wires, plugs, housing and other components before use. Stop using the charger when damage is found until it is repaired.
- After a period of time, lubricate the parts of the vehicle with a small amount of lubricating oil to prevent wear and rust.
- Vehicles should be placed far away from fire sources and avoid long-term illumination. Keep it flat and facing upwards, not upside down or tilted; in wet weather, parked indoors or covered with waterproof cloth.
- Vehicles should be kept away from hot objects such as stoves and heaters. Plastic parts may melt. When charging, keep away from inflammable materials to prevent fire.
- After use, please charge in time, charging must be adult operation. If you don't have to charge the battery for a long time, then charge it at least once a month to extend the battery life.
- Wipe the vehicle with dry soft cloth. Non-waxy furniture polishing material can also be used instead of soft cloth to wipe plastic parts to achieve surface finish effect. Do not use chemical solvents to wipe plastic parts of toys. Do not use soap and water to clean vehicles. Do not drive in rainy or snowy weather. Water can damage motors, electrical systems and batteries.
- When you stop using or placing the product, please cut off the power supply of the product and dial all switches to the stop or close position.
- Please do not use fuse that is not in conformity with the specifications of this product.

Troubleshooting Guide 18

Checkpoint		Elimination method
1. Is the protector of the vehicle disconnected? 2. Does the foot switch connect well? 3. Is the welding line on the motor terminal good? 4. Is the connector of the motor lead properly connected? 5. Is it turning the Disconnect the plug-in of the motor and directly connect it to the battery?		**Yes, cut off the power for 15-20 seconds and then restart No, next** NO, fix the foot switch; Yes, next NO, Weld the terminal wire well; Yes, next No, Plug in plug-ins; Yes, next NO, Change motor; Yes, Driving circuit boards need professional maintenance, contact agents or distributors
1. Check whether the battery voltage is normal. 2. Will the motor (Gearbox) directly connect to the battery and speed up?		NO, charge; yes, next Yes, Drive circuit board failure, contact agent or dealer
1. Is the battery plug-in loose? 2. Does the charger feel any slight heat when charging?		Yes, Lock battery plug in; No, next No, Maybe the charger is broken. Replace the charger
Car can move . But no sound and light	1. Is the acoustooptic switch good? 2. Check whether the line and plug-ins from battery to vehicle are good.	No, change button; Yes, next No, plug in the plug-in and connect the broken line
Wheels can not move.	1. Is the drive rotating? 2. Check gear box, gear at all levels are damaged.	Yes, Land the wheel; No, next Yes, Change a new gearbox
The vehicle sometimes move and sometimes stop.	1. Does the rider weigh more than 35 kilograms? 2. Is it driving in rough terrain? 3. Check that the horizontal wheel can turn itself?	Yes, normal; No, next Yes, normal; The vehicle should run on the cement road No, next No, remove wheel and wheel fault

vehicles do not respond in Remote control	1.Does the brake function start? 2.Is remote control electrified? 3.Is the receiver wiring harness loose?	Yes, Press the brake key to relieve the brake function; No, normal Yes, try again;No, Check whether the battery is out of power and whether the installation is in place. Yes, remove the row,reinstall;No, normal

FCC Warning Statement

Changes or modifications not expressly approved by the party responsible for compliance could void the user's authority to operate the equipment. This equipment has been tested and found to comply with the limits for a Class B digital device, pursuant to Part 15 of the FCC Rules. These limits are designed to provide reasonable protection against harmful interference in a residential installation. This equipment generates uses and can radiate radio frequency energy and, if not installed and used in accordance with the instructions, may cause harmful interference to radio communications. However, there is no guarantee that interference will not occur in a particular installation. If this equipment does cause harmful interference to radio or television reception, which can be determined by turning the equipment off and on, the user is encouraged to try to correct the interference by one or more of the following measures:

- - Reorient or relocate the receiving antenna.
- - Increase the separation between the equipment and receiver.
- - Connect the equipment into an outlet on a circuit different from that to which the receiver is connected.
- - Consult the dealer or an experienced radio/TV technician for help.

This device complies with part 15 of the FCC Rules. Operation is subject to the following two conditions: (1) This device may not cause harmful interference, and

(2) this device must accept any interference received, including interference that may cause undesired operation.

The device has been evaluated to meet general RF exposure requirement.