PRODUCT SPECIFICATION	Rev.: v1.0

Antenna Specification Sheet

Product Part Number:	WA146 Ant
Authorized Signatory:	Dave.li
Date:	2025.1.9

AMENDMENT RECORDS

Revision	Description	Originator	Date
V1.0	First version	Cao HH	2024.12.24

1 Basic Specifications

Antenna Name: WA146 Ant 0

Operation Frequency: 2.4~2.483GHz, 5.15~5.25GHz, and 5.725~5.875GHz

Gain: 0.99dBi (2.4~2.483GHz), 0.95dBi (5.15~5.25GHz), 1.47dBi (5.725~5.875GHz)

Antenna type: Dipole

Connector Type: /

Impedance: 50ohm

Efficiency: ≥50%

VSWR: ≤2

Polarization type: Linear

3dB Beamwidth: Omnidirectional horizon

Manufacturer: Shenzhen ZTX Communication Technology Co., LTD.

Address: No.34 Shilong Road, Bao'an District, Shenzhen, Guangdong Province

2 Gain Specifications

LF antenna (ANT0)

Frequency	Efficiency	Gain(dBi)
2400MHz	66%	0.76119
2420MHz	63%	0.81233
2450MHz	65%	0.99091
2480MHz	59%	0.80206

Frequency	Efficiency	Gain(dBi)
5150MHz	43%	0.45847
5200MHz	40%	0.79302
5250MHz	44%	0.95313
Frequency	**Efficiency**	**Gain(dBi)**
5725MHz	55%	1.25112
5775MHz	52%	1.32950
5800MHz	53%	1.45854
5850MHz	52%	1.46515

3 Detailed Radiation Pattern

Test lab	Satimo SG24
Test date	2024/12/10

2.4G radiation pattern_Phi=0

LF Phi 90 (ANT0)

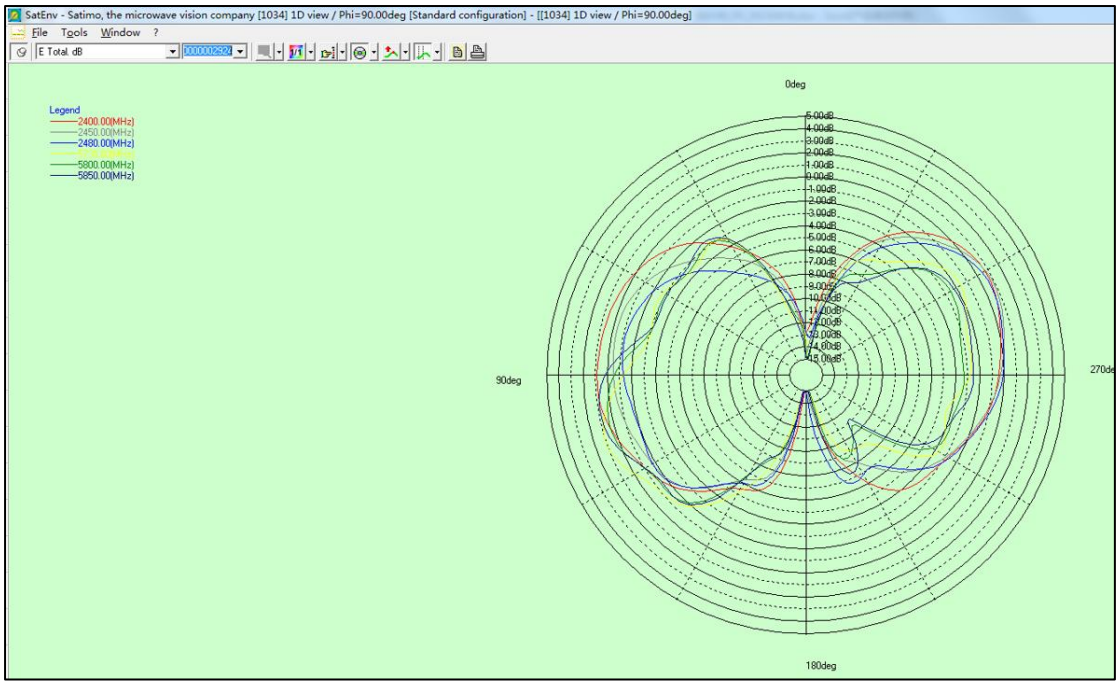

LF Theta90 (ANT0)

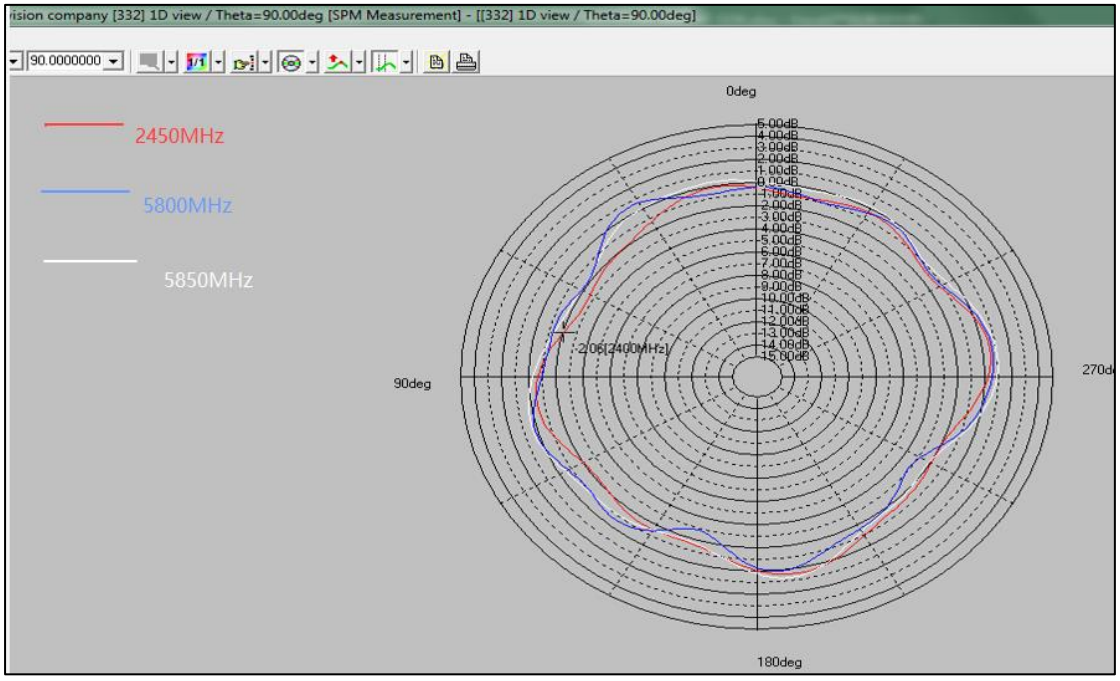
ision company [332] 1D view / Theta=90.00deg [SPM Measurement] - [[332] 1D view / Theta=90.00deg]
90.0000000
2450MHz
5800MHz
5850MHz
0deg
90deg
180deg
270d
5.00dB
4.00dB
3.00dB
2.00dB
1.00dB
0.00dB
-1.00dB
-2.00dB
-3.00dB
-4.00dB
-5.00dB
-6.00dB
-7.00dB
-8.00dB
-9.00dB
-10.00dB
-11.00dB
-12.00dB
-13.00dB
-14.00dB
-15.00dB
-206(2400MHz)

4 Structure drawing
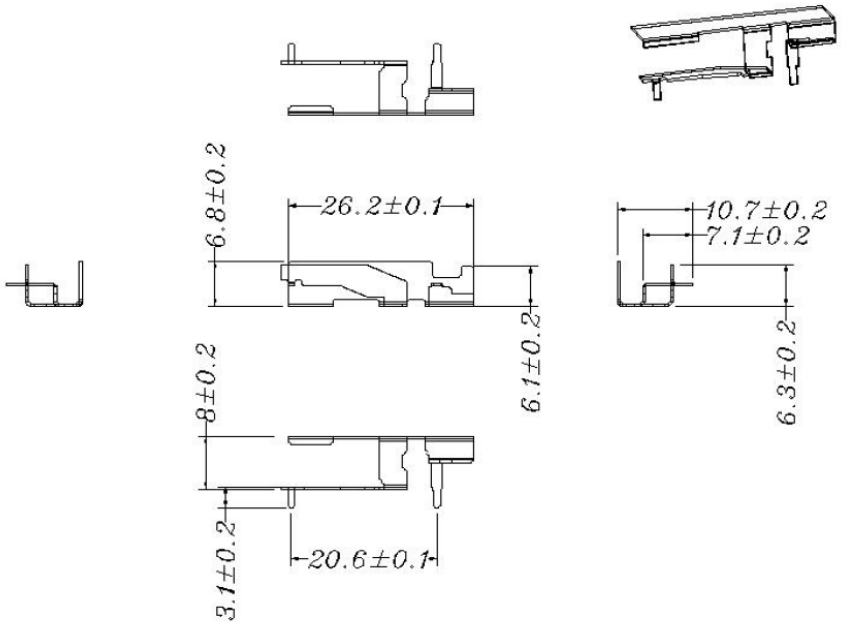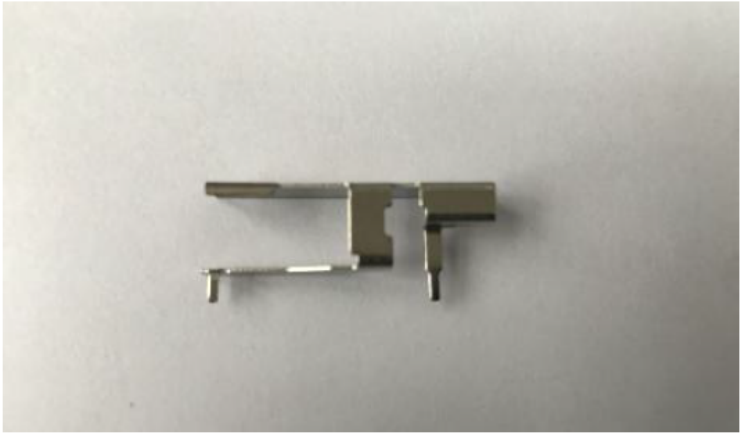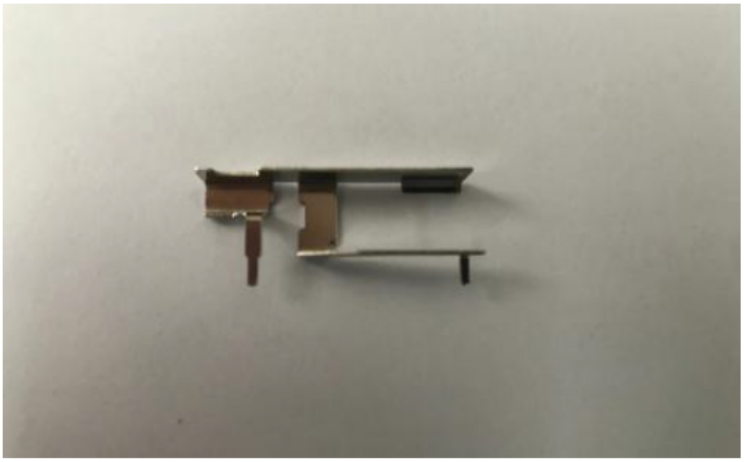
LF antenna (ANT0, mm)