INH Product Specification

Shenzhen Intefly Electronics Co.,Ltd
Tell: 0755-29126890
Web: www.intefly.com
Address: 8th building, XingWei 2nd industrial park, HuaiDe South Road, FuYong Street, Bao'an District, Shenzhen, China

1. Product Introduction

On the principle of eco-friendly and intelligent application, this integrated solar LED street light was born to solve the problem of high-expense electricity or lacking electricity in some areas, by using the solar power energy. Well-designed by our senior ID engineer, super-thin body design of 26mm thickness, detachable battery storeroom and RGB indicator makes it more artistic and easier to operate.

2. Product structure

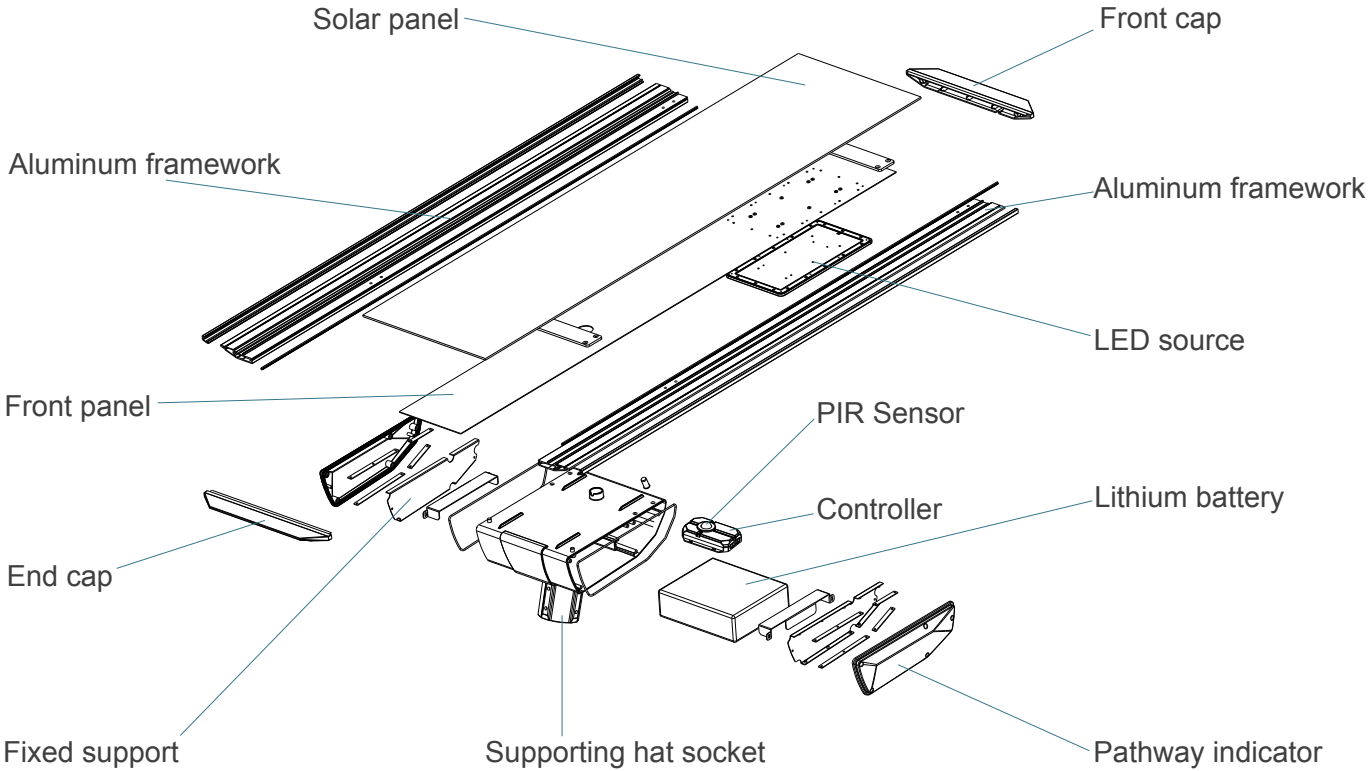

3. Function characteristics

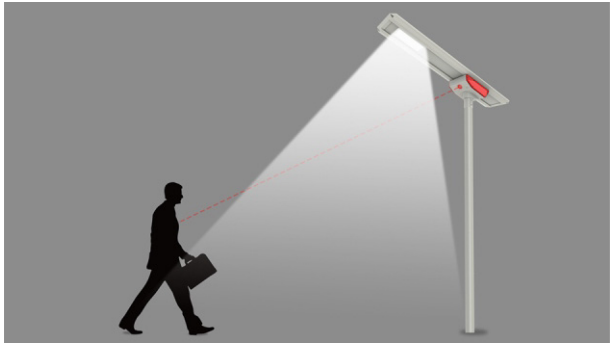

PIR sensor: Check if somebody under the light through human infrared sensor, and adjust the brightness accordingly.

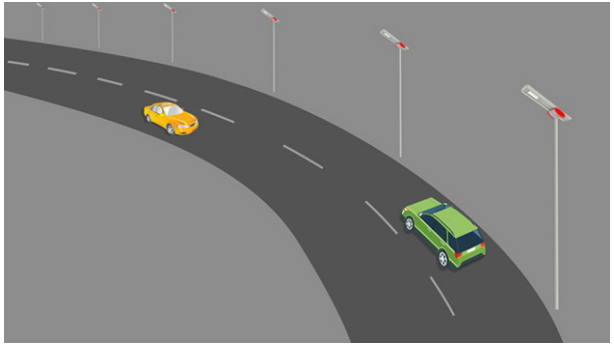

Pathway indicator: Alert the drivers to pay attention by pre-indicating the front road status, especially in rainy or foggy days.

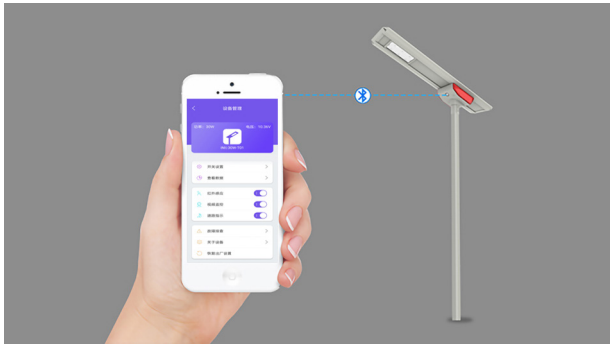

APP control: Completely controlled by bluetooth APP, including turn on/off the light, read the light data and so on.

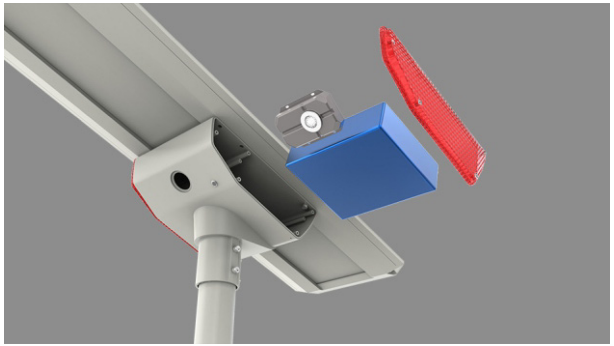

Detachable battery storeroom: Easier to replace the battery or controller, no need to disassemble the light.

4. Product advantages

Compared with LED street light

1. Supplied by solar power energy, eco-friendly and no electricity charges;
2. DC12V power supply system, more safety than commercial electricity;
3. Easier installation, no buried cable;
4. Lower maintenance cost, all the problems will be found on smartphone APP;
5. All the lights are independent, won’t affect each other if any problems occur;
6. Time control and light control, will automatically turn on/off according to the real-time environment, and can set lighting time in different periods.

Compared with other solar street light

1. Self-designed and self-developed, exclusive private mold；
2. All the components, such as solar panel, battery packing and controller, are entirely produced and tested by our workshop, which makes the quality control better；
3. Choose raw materials from major brand suppliers, such as Bridgelux；
4. All the lights will be under aging test for 72 hours to guarantee the quality before shipping；
5. Patent bluetooth APP, can turn on/off the light, read the data, troubleshooting and so on；
6. With detachable battery storeroom, easier to replace the battery or controller, no need to disassemble the light；
7. We provide 5 years warranty.

5.Basic parameter:INH-40W

Electrical Characteristic	
Rated Power	40W
Solar Panel	18V/90W
Lithium Battery	519.4WH
Charging Time	6-8H
Discharging Time	>36H
Working Temperature	-25℃~+65℃
Switch Threshold	15LUX
Sensing Distance	≤12M

LED Parameters	
LED	42pcs 5050LED
Lumen Flux	10400-12000LM
Luminous Efficiency	130-150LM/W
Light Distribution	Batwing Type
Color Temperature	2800-6500K

Mechanical Specification	
Light Body Size	1575*360*270MM
Weight	20KG
Installation Height	8-10M
Pole distance	24-30M

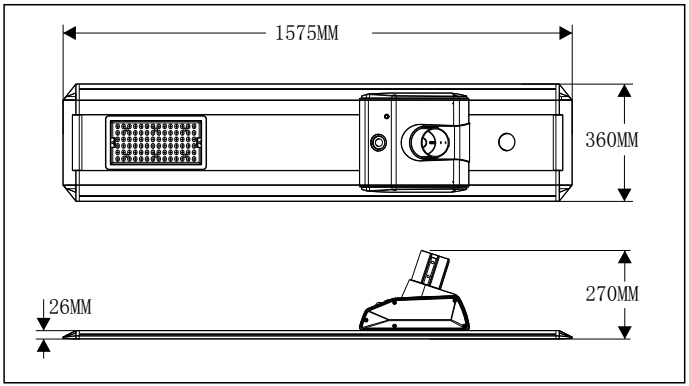

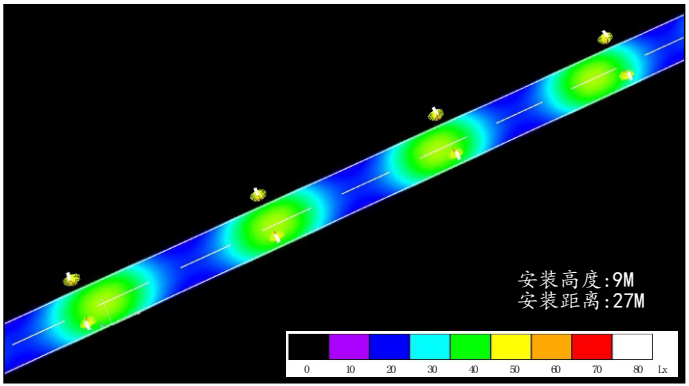

6. Applications

Wide range of application, can satisfy the lighting requirement in most areas, the pathway indicator also can be another scenary of the urban infrastructure ;

Can be used in traffic road, highway, main street, outdoor parking lot, square and scenic spot etc.

7. Installation and maintenance

1.Installation

Installation steps as follows,

（1）. Insert the pole into the hat socket

(2). Fasten the 6 screws with tools

(3). Stand the pole upright

2.Maintenance

The first month after installation and later every 6 monthes：

- Regularly clean the solar panel from dirt spots, dusting or other kinds of soiled is suggested to assure the charging efficiency；
- Regular maintenance is suggested to keep the locking screws of pole are secured to the ground, and keep the pole clear from rust or corrosion.

3.Warranty

Product Warranty: We provide 5 years warranty.

Disclaimer Declaration:

- The manufacturer shall not be responsible or liable for failure to perform all or any portion of this specification due to earthquake, flood, thunder or other natural hazards, and fire disaster which not caused by our products;
- The manufacturer shall not be responsible for damage and loss casued by any unforeseen events such as theft, traffic accidents;
- The manufacturer shall not be responsible for loss which not complied with this product manual；
- The manufacturer shall not be responsible for loss which caused by use in conjunction with irrelevant our products.

FCC Statement

This device complies with Part 15 of the FCC Rules. Operation is subject to the following two conditions:
(1)This device may not cause harmful interference.
(2)This device must accept any interference received, including interference that may cause undesired operation.
2. Changes or modifications not expressly approved by the party responsible for compliance could void the user's authority to operate the equipment.
Note:This equipment has been tested and found to comply with the limits for a class B digital device,pursuant to Part 15 of the FCC Rules. These limits are designed to provide reasonable protection against harmful interference in a residential installation.

This equipment generates uses and can radiate radio frequence energy and,if not installed and used in accordance with the instructions,may cause harmful interference to radio communications.However,there is no guarantee that interference will not occur in a particular installation.if this equipmemt does cause harmful interference to radio or television reception,which can be determined by turning the equipment off and on,the user is encouraged to try to correct the interference by one or more of the following measures:

- Reorient or relocate the receiving antenna.
- Increase the separation between the equipment and receiver.
- Connect the equipment into an autlet on a circuit different from that to which the receiver is connected.
- Consult the dealer or an experienced radio/TV technician for help.

The device has been evaluated to meet general RF exposure requirement. The device can be used in portable exposure condition without restriction.