SPECIFICATION

PART NO: LA31H2450-A71 **CUSTOMER PART NO:**
CUSTOMER APPROVED BY: **Validation Date APPROVED DATE:**

RoHS Compliant Parts

66 Zhengyuan Road, Jiaxing Economic Development Zone, Jiaxing, Zhejiang Province, China

No.66 ZhengyuanRoad, Economic Development Zone,Jiaxing,Zhejiang,China

TEL ： 0086-573-83651818 FAX ： 0086-573-83651858

Fit the Prepared by:	Review of the Checked by:	Approved by the Approved by:
Sample delivery date is Formed On	Product version, Document Version (V1.0)	

Catalogue

Specifications version change record Version rejigger track record.....3

1. An Overview of the Introduction.....…… ……4

2. Model # Part Number.....……4

3.External size and test plate pad size Dimensions...……4 ～ 5

4. Test circuit and matching circuit Evaluation Board and Matching Circuits.....5

5. Electrical performance: Electrical Characteristics.....6

6. Characteristic curve: Characteristic curve.....……6

7. Direction diagram Radiation Pattern...……7～8

8. Reliability test: Dependability Test.....9～10

9. Reflow welding temperature Reflow Soldering Standard Condition...……10

10. Packaging size: Packaging and Dimensions.....11

Version change record

Version	Change the record	Prepared	Approve	Date
V1.0	initial issue	Pan Feng	Luo Chang mast	2021.04.26

remarks:

1. When changing the electrical performance index of the product, the version number should be replaced (V1.0 to V2.0, V3.0...);

2. When changing the product test method (including the reliability test conditions), or changing the use conditions, the current version number plus series (V1.0 changes to V1.1, V 1.1, V1.2...).

1. An Overview of the INTRODUCTION

"Jiali" microwave multi-layer ceramic antenna LA series products are designed for WLAN, WiFi, Bluetooth, PHS, mobile phone multi-frequency antenna, FM and other small volume SMD chip design.

"GLEAD" Microwave Multi-Laye r Ceramic Antenna LA series are designed to be used in WLAN 、WiFi 、Bluetooth 、PHS 、 Multiple-band Mo bile phone antenna, FM, etc and compact size SMD chip design.

2. Part Number

LA 31 H 2450 - A71

- A71 — Product Name: A71
- 2450 — Antenna Frequency: 2450 MHz
- H — Design Series
- 31 — Product size / Size: 3.21.60.6
- LA — Multi-layer Antenna

3. External size Dimensions (Unit: mm)

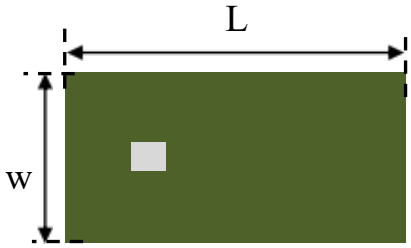

(Top View) A

Number	Terminal N ame
①	INPUT
②	NC

(Bottom View)

(Side View)

(Side View)

Symbols	L	W	T	A
Dimensions	3.2+/-0.2	1.6+/-0.2	0.6+/-0.1	0.5+/-0.1

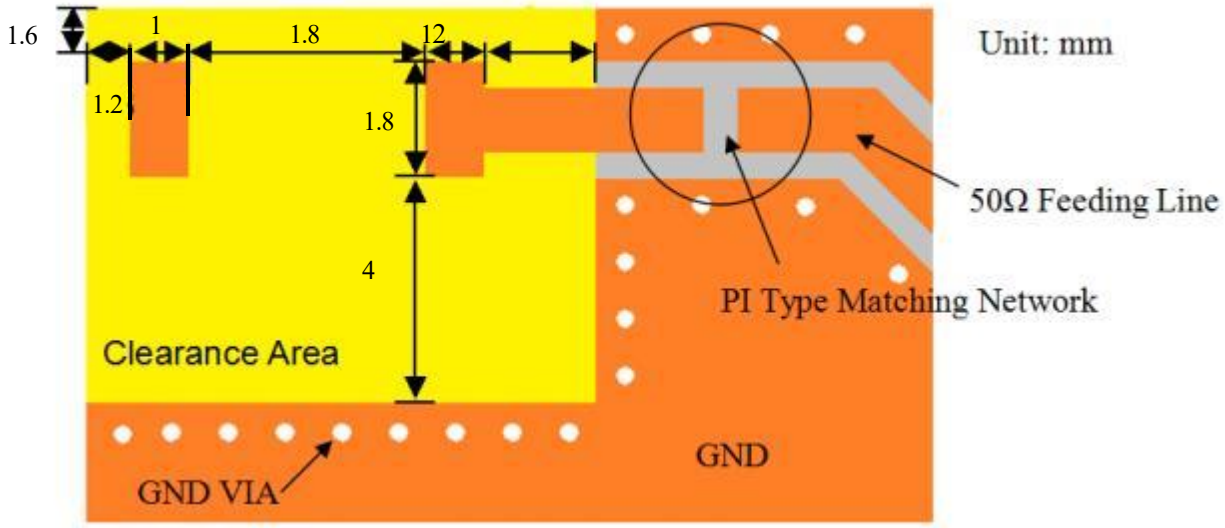

4. Evaluation Board and Matching Circuits

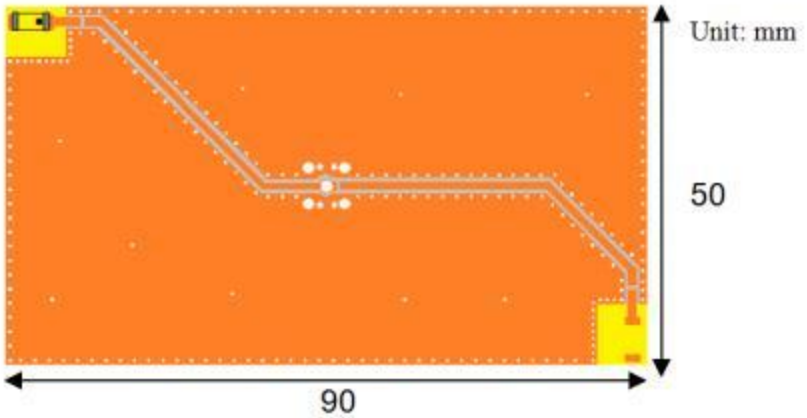

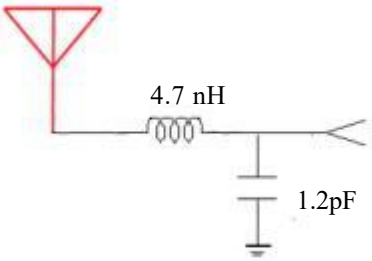

5. Electrical Characteristics

No.	I. Item (Project)	Specifications (Feature)
5.1	(With the matching circuit test) After Matching	2450 MHz
5.2	Band Width Pass band width	100MHz typ .
5.3	Peak Gain, Peak gain	2.01 dBi
5.4	V.S.W. R standing-wave ratio	≤2.0
5.5	Polarization Polarization mode	Linear Linearity
5.6	Azimuth Beam width Azimuth angle	The Omni-directional is omnidirectional
5.7	Impedance Impedance	50 Ω

6. Characteristic curve

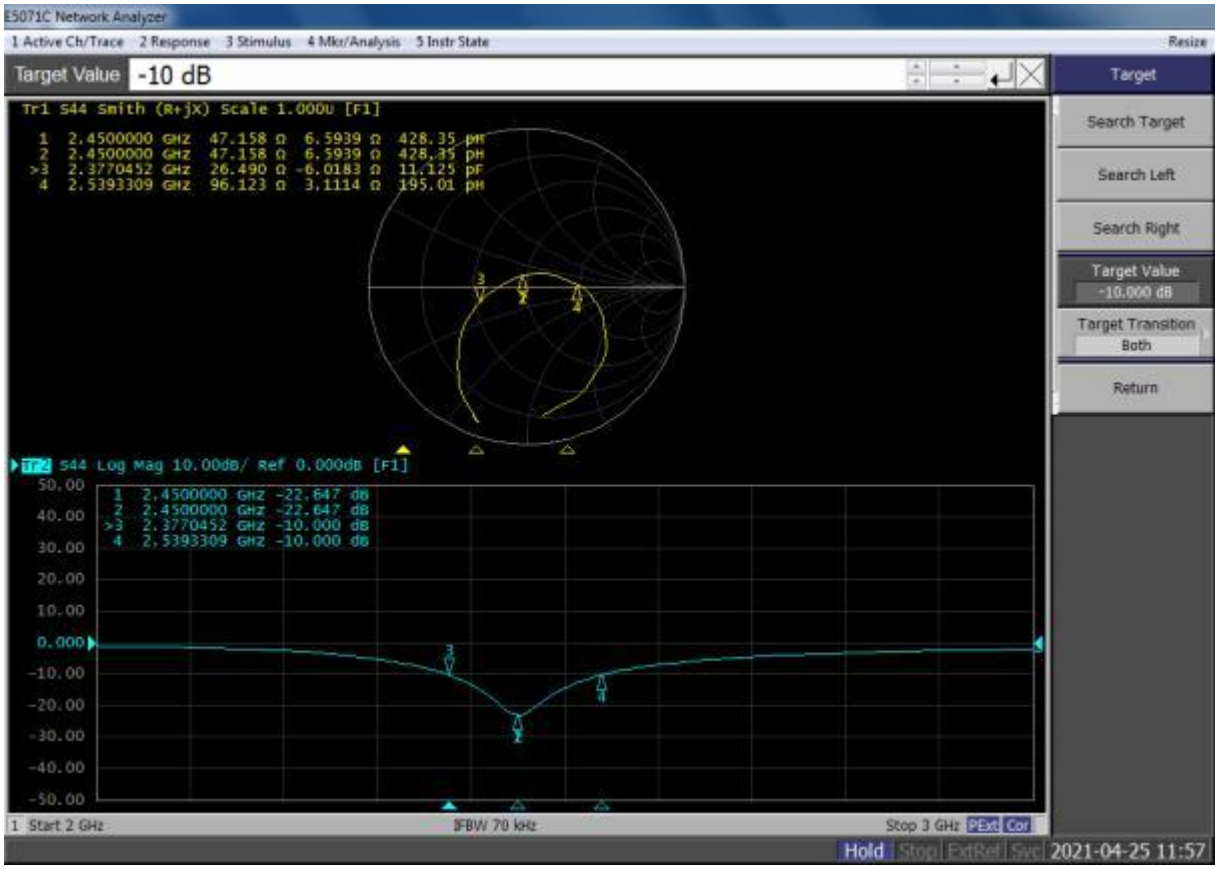

7. Radiation Pattern

coordinates：

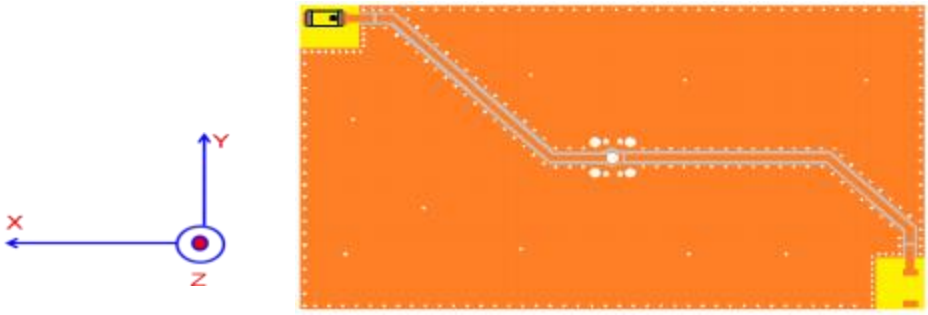

X-Z Plane

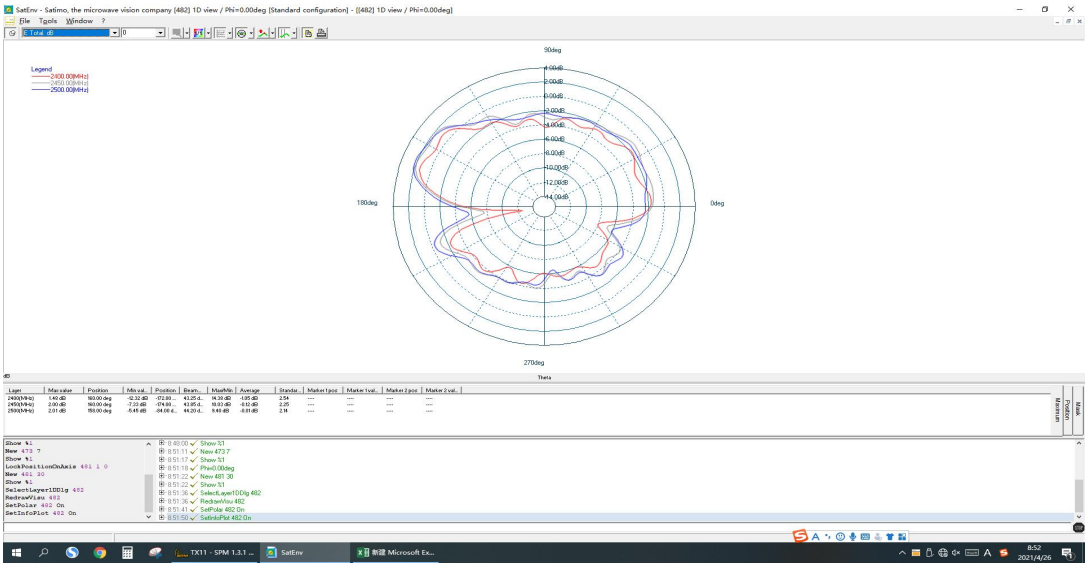

Y-Z Plane

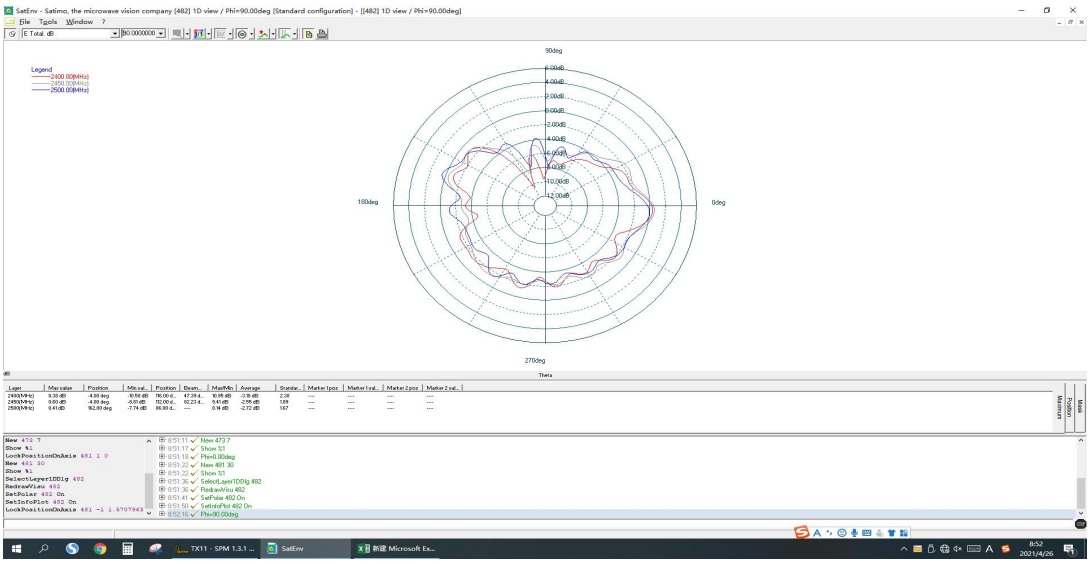

X-Y Plane

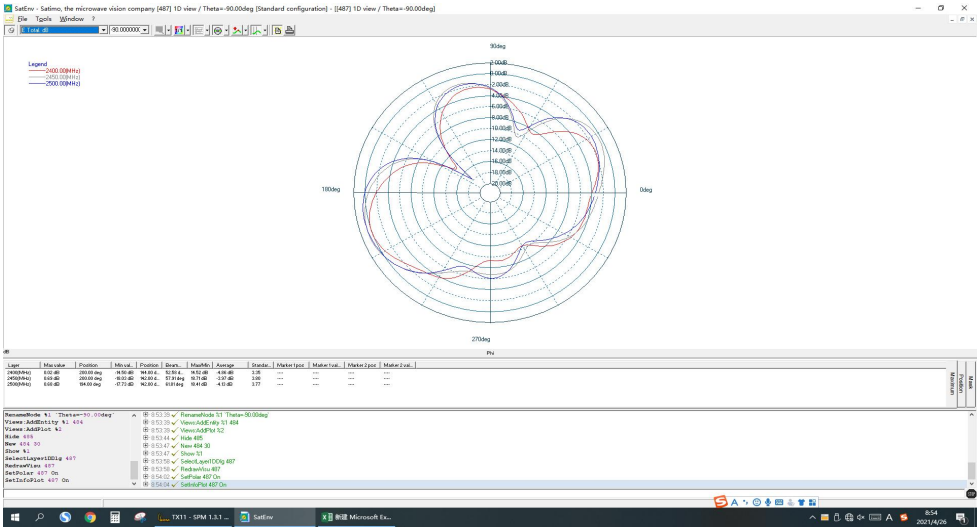

3D Radiation Pattern

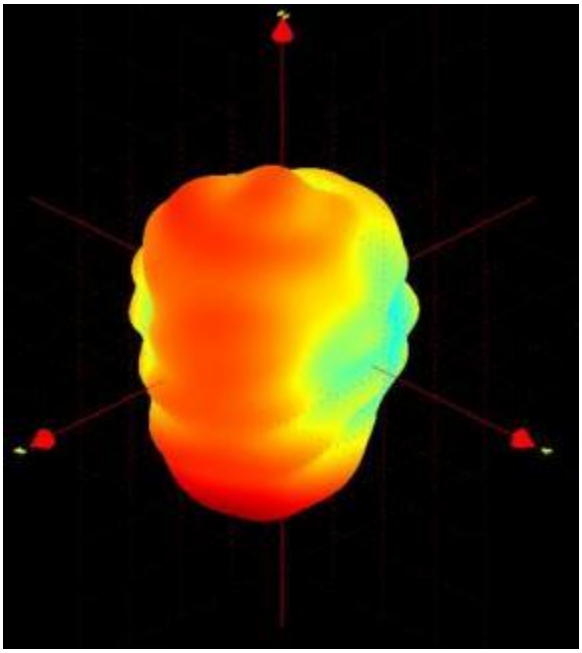

Frequency (MHz)	2400	2450	2500
Avg.Gain (dBi)	-3.03	-2.01	-2.29
Peck Gain (dBi)	1.48	2.0	2.01
Efficiency (%)	59	72	70

8 Dependability Test

Base condition: Temperature range Temperature range 25±5℃

Relative humidity range Relative Humidity range 55~75%RH

working temperature Operating T emperature range -40℃~+105℃

reserve temperature Storage Temperature range -40℃~+105℃

8.1, Vibration Resist

At a vibration frequency of 10 to 55 Hz with an amplitude of 1.5mm along the X.Y. After 2 hours of vibration, each test conforms to Table 8.1~8.4.

The device should satisfy the elec trical characteristics specified in paragraph 8.1~8.4 after applied to the vibration of 10 to 55Hz with amplitude of 1.5mm for 2 hours each in X , Y and Z directions .

8.2 Drop Shock

At the height of 100cm, fall on the wooden floor for 3 times before the test meets Table 8.1~8.4.

The device should satisfy the electr ical characteristics specified in paragraph 8.1~8.4 after dropping onto the hard wooden board from the height of 100cm for 3 times each fa cet of the 3 dimensions of the device.

8.3 Solder Heat Proof

After heat of 120℃ -150℃ for 120 seconds, 3 ± 0.5 seconds, 3 ± 0.5 seconds, or 300℃ -10℃, without damage to the welding surface.

The device should be satisfied after preheating at 120℃~150℃ for 120 seconds and dipping in soldering Sn at 255℃+10℃ for 5±0.5 seconds , or electric iron 300℃-10℃ for 3±0.5 seconds , without damni fy.

8.4 Adhesive Strength of Termination

5N (0603) on the product electrode terminal; 10N (> 0603) horizontal thrust for 10 ± 1 seconds without obvious appearance damage, shift with the electrode.

The device have no remarkable damage or removal of the termination after ho rizontal force of 5N(≦0603)；10N(>0603)with 10±1 seconds .

8.5 Bending Resist Test

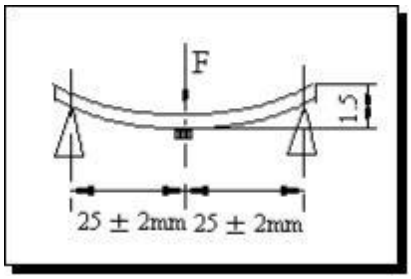

Welding the product in the middle of the PCB board of 1.6±0.2mm according to the drawing, applying force by the arrow direction: 1mm / S, bending distance: 1.5mm, maintain 5 ± 1S, and the metal layer of the product does not fall off. Weld the product to the center part of the PCB with the thickness 1.6 ±0.2mm as the illustration shows , and keep exerting force arrow -ward on it at speed of :1mm /S , and hold for 5±1S at the position of 1.5mm bending distance , so far , any peeling off of the product metal coating should not be d etected .

8.6 Moisture Proof

If in a temperature of 60 ± 2℃ with 96 hours relative humidity of 90~95%, and restored for 1~2 hours in room temperature, the test is in accordance with Table 8.1~8.4.

The device should satisfy the electrical chara cteristics specified in paragraph 8.1~8.4 after exposed to the temperature 60±2℃and the relative humidity 90~95% RH for 96 hours and 1~2 hours recovery time

under normal conditio n.

8.7 High Temperature Endurance

Place for 96 ± 2 hours in an incubator at 85 ± 5℃ and recover for 1 to 2 hours at room temperature before testing. Compliance with Table 8.1~8.4.

The device should satisfy the electrical cha racteristics specified in paragraph 8.1~8.4 after exposed to temperature 85±5℃for 96±2 hours and 1~2 hours recovery time under normal temperature .

8.8 Low Temperature Endurance

Place 96 ± in a temperature of-40℃± 5℃ and recover for 1~2 hours as specified in Table 8.1~8.4.

The device should also satisfy the electrical c haracteristics specified in paragraph 8.1~8.4 after exposed to the temperature -40℃±5℃ for 96±2 hours and to 2 hours recovery time under normal temperature .

8.9 Temperature Cycle Test

At-40℃ for 30 minutes and + 85℃ for 30 minutes, after 5 cycles and 1 to 2 hours in room temperature, the test conforms to Table 8.1~8.4.

The device should also satisfy the electrical characteristics specified in paragraph 8.1~8.4 after exposed to the low temperature -40℃ and high temperature +85℃ for 30±2 min each by 5 cycles and 1 to 2 hours recovery time under normal te mperature.

9 Reflow Soldering Standard Condition

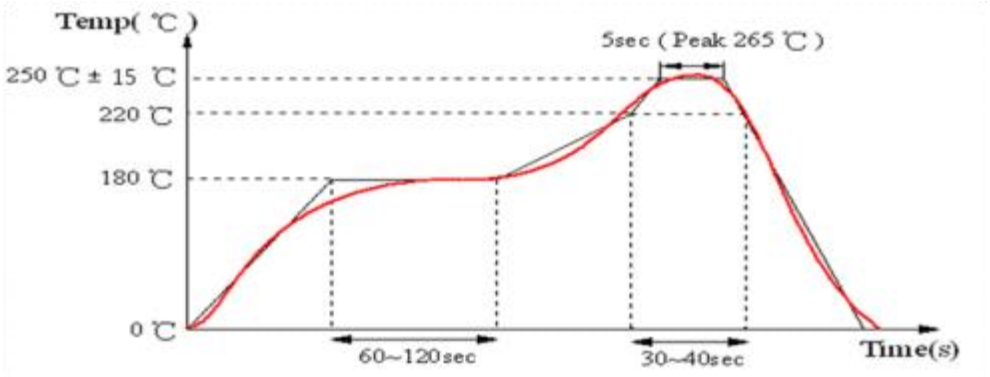

10 Packaging size (3216) Packaging and Dimensions

10.1 Plastic Tape

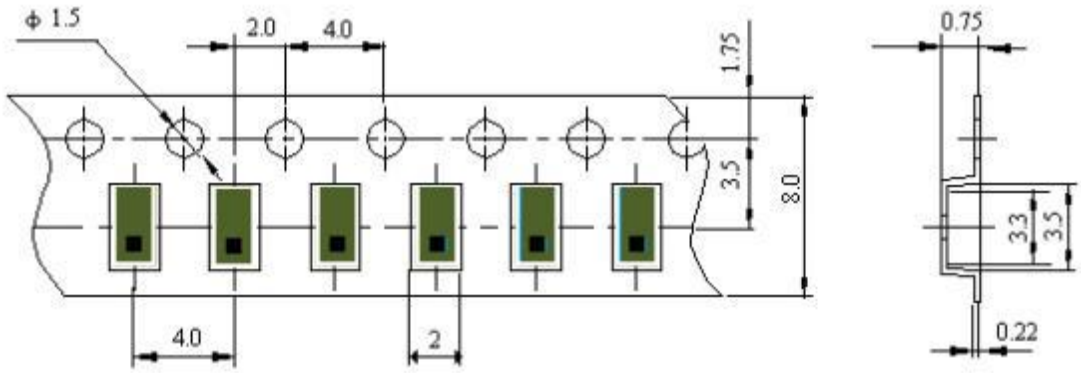

Packaging description: Remarks for Package

The length of the tail hole of the carrier is 150~200mm, the length of the carrier head is 250~300mm, and the cover of the head is 250mm longer.

Reserve a length of 150~200mm for the trailer of the carrier and 250~300 mm for the leader of the carrier and further 250mm of cover tape at the leading part of the carrier.

10.2 Reel (3000 pcs/Reel)

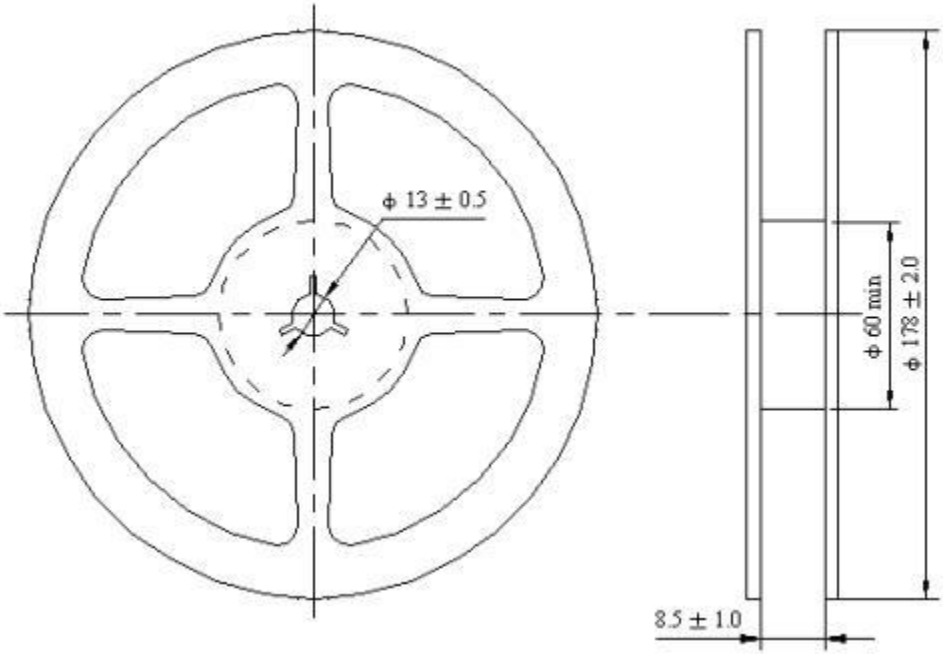

10.3, Storage Period

The product shall be used up within one year after receipt.

Product should be used within twelve months of receipt.

Wet sensitivity level 1 / Storage temperature and humidity:

MSL 1 / Storage Temperature Range : -40~105 degree C , Humidity : <85%RH