About the user manual

This user manual is applicable to DNBSEQ-T7RS Genetic Sequencer. The manual version is 3.0 and the software version is V1.

This manual and the information contained within are proprietary to Wuhan MGI Tech Co., Ltd. (hereinafter called MGI), and are intended solely for the contractual use of its customer in connection with the use of the product described herein and for no other purpose. Any person or organization can not entirely or partially reprint, copy, revise, distribute or disclose to others the manual without the prior written consent of MGI. Any unauthorized person should not use this manual.

MGI does not make any promise of this manual, including (but not limited to) any commercial of special purpose and any reasonable implied guarantee. MGI has taken measures to guarantee the correctness of this manual. However, MGI is not responsible for any missing parts in the manual, and reserves the right to revise the manual and device, so as to improve the reliability, performance or design.

Figures in this manual are all illustrations. The contents might be slightly different from the device, please refer to the device purchased.

DNBSEQ™ is a trademark of MGI or its subsidiaries in China and/or other countries. Microsoft® and Windows® are trademarks or registered trademarks of Microsoft Corporation in the U.S. and/or other countries. Intel® and Intel Core™ are trademarks of Intel Corporation or its subsidiaries in the U.S. and/or other countries. Other names and brands mentioned in this manual might be claimed as the property of others.

©2020-2022 Wuhan MGI Tech Co., Ltd. All rights reserved.

Revision date: May 24, 2022

Revision history

	Date	Version
Revision	May 24, 2022	3.0
	February 22, 2021	2.0
Initial release	December 30, 2020	1.0

Contents

Safety

Conventions 2

General safety 2

Electrical safety 4

FCC statement 4

IC STATEMENT 5

Mechanical safety 6

Components safety 6

Biological safety 6

Symbols 7

- Device 7
- Label 8
- Packaging 9

Device overview

Intended use 12

Working principle 12

Structural composition 13

Basic components 15

- Front view 15
- Keyboard and ports 17
- Reagent compartment 18
- Flow cell 18
- Rear view 19
- Ports 20

Control software 21

- Self-test interface 21
- Main interface 22
- Menu area 23

Operation area 25
Log interface 25
Settings interface 26
Maintenance interface 27
Shutdown or restart interface 28
About interface 28

Getting started

Site requirements 30
Network requirements 30
- Operating environments of the computer 30
- Software security 31
- Data and computer ports 31
- Access control 31

Installing the device 31
Powering on or off the device 32
- Powering on the device 32
- Powering off the device 32

Inspecting the device 33
Preparing the power supply 34
Preparing peripheral devices 34
Preparing samples 35
Preparing the reagent cartridge and flow cell 35
- Reagent cartridge and sequencing flow cell 35
- Washing cartridge and washing flow cell 35

Preparing the pure water container 36
Preparing the waste container 37

Sequencing

Workflow 40
Logging in 40

Selecting a flow cell stage 41
Loading the reagent cartridge 41
Loading the flow cell 41
Reviewing parameters 43
Performing a sequencing run 43
Automatic post-wash 44
Disposing of reagent cartridge and flow cell 44

Maintaining the device

Maintaining the main unit 48
Daily maintenance 48
Weekly cleaning 48
Monthly cleaning 49
Maintaining the power supply 49
Maintaining the software 49
Performing a wash 50
Maintaining the pure water container 51
Replacing the waste container 51
Troubleshooting 52
Transportation and storage 53
Disposal of the device 54

Appendixes

Specifications 57
Compliance information 59
Manufacturer information 61
European representative information 63
Index 65

---This page is intentionally left blank.---

Safety

This chapter describes basic safety information about the device. Carefully read and understand the information before use to ensure correct operations, best performance, and personnel safety. Keep this manual at hand for reference at any time.

Conventions

The following table describes conventions that are used in this manual:

Item	Description
Warning	Indicates that the operator should operate the device by following the instructions. Otherwise, it might result in personal injury.
Caution	Indicates that the operator should operate the device by following the instructions. Otherwise, it might result in device malfunction, damage or inaccurate experiment result.
NOTE	Indicates that the operator should pay special attention to the note information, and operate the device by following the instructions.
	Indicates biological risks. The operator should operate the device by following the instructions.
Boldface	Indicates the printings and on-screen characters on the device.

General safety

Warning

- Ensure that the device is operated under the conditions specified in this manual. Otherwise, it might result in incorrect experiment results, device damages, or even personal injury.
- Ensure that the components of the device are completely installed before operation. Otherwise, it might result in personal injury.
- A laser is installed in the device. Laser radiation can cause eye injury and skin burns. Before performing a sequencing run, ensure that the optics maintenance door, fluidics maintenance door, and flow cell retrieval compartment door of the device are closed.

- Maintain the device by following the instructions in *Maintaining the device on Page 47* to ensure best performance. Otherwise, it might result in device malfunction or even personal injury.

Caution

- Only the technical support authorized by the manufacturer or the qualified and trained personnel can unpack, install, move, and maintain the device. Incorrect operation might cause inaccurate experiment results or damages to the device.
- Do not move the device after the technical support have installed and debugged the device. Incorrect operation might result in inaccurate experiment results. If you require to re-position the device, contact the technical support.
- Only trained personnel, technicians, or laboratory assistants can operate the device.
- Do not operate the device in the presence of flammable or explosive liquids, vapors or gases. Otherwise, it might result in device malfunction, or even personal injury.
- Do not disconnect the power cord when the device is on. Otherwise, it might result in device malfunction.
- Do not place tubes or reagent kits on the device. Liquids seeping into the device might result in device malfunction.
- Do not reuse the disposable items.
- Only the peripheral devices and consumables specified by the manufacturer can be used.
- If you have maintenance questions that are not mentioned in this manual, consult the technical support.
- Only the components provided by the manufacturer can be used for device maintenance. Unapproved components might damage the device or degrade performance.
- The device is verified before delivery. If serious deviation occurs during use, contact the technical support for calibration.
- A key is needed to open the fluidics maintenance door after the device is powered off and it is only accessible to the technical support authorized by the manufacturer or the qualified and trained personnel, please do not open the flow stage compartment by force.
- A screwdriver is needed to open the optics maintenance door after the device is powered off and the door can be opened only by the technical support authorized by the manufacturer or the qualified and trained personnel, please do not open the optics maintenance door by force.

Electrical safety

Warning

- Before initial use of the device, assess the electromagnetic environment in which the device will be used.
- Do not use the device in close proximity to the source of strong electromagnetic fields, such as unshielded sources of radiated emissions. Radiated signals can reduce the accuracy of the results.
- Ensure that the device is properly grounded, and the grounding resistance is less than 4 Ω. Failure to do so might result in inaccurate experiment results or even electric shock.
- Do not remove the device cover and expose the inner components outside. Otherwise, it might cause electric shock.
- Only the power cord of the manufacturer can be used.

Caution

- Prepare the laboratory and power supply according to *Getting started on Page 29.* For more details, refer to the relevant site preparation guide.
- Ensure that the input voltage meets the device requirement.

FCC statement

This device complies with part 15 of the FCC Rules. Operation is subject to the following two conditions:

1. This device may not cause harmful interference, and
2. This device must accept any interference received, including interference that may cause undesired operation.

Any Changes or modifications not expressly approved by the party responsible for compliance could void the user's authority to operate the equipment.

This equipment should be installed and operated with a minimum distance of 25cm between the radiator and your body.

This equipment has been tested and found to comply with the limits for a Class B digital device, pursuant to Part 15 of the FCC Rules. These limits are designed to provide reasonable protection against harmful interference in a residential installation. This equipment generates uses and can radiate radio frequency energy and, if not installed and used in accordance with the instructions, may cause harmful interference to radio communications. However, there is no guarantee that interference will not occur in a particular installation. If this equipment does cause harmful interference to radio or television reception, which can be determined by turning the equipment off and on, the user is encouraged to try to correct the interference by one or more of the following measures:

- Reorient or relocate the receiving antenna.
- Increase the separation between the equipment and receiver.
- Connect the equipment into an outlet on a circuit different from that to which the receiver is connected.
- Consult the dealer or an experienced radio/TV technician for help.

IC statement

This device complies with Industry Canada's licence-exempt RSSs. Operation is subject to the following two conditions:

1. This device may not cause interference; and
2. This device must accept any interference, including interference that may cause undesired operation of the device.

The distance between user and products should be no less than 20 cm.

Le présent appareil est conforme aux CNR d'Industrie Canada applicables aux appareils radio exempts de licence. L'exploitation est autorisée aux deux conditions suivantes:

1. l'appareil ne doit pas produire de brouillage, et
2. l'utilisateur de l'appareil doit accepter tout brouillage radioélectrique subi, même si le brouillage est susceptible d'en compromettre le fonctionnement.

La distance entre l'utilisateur et de produits ne devrait pas être inférieure à 20 cm.

Industry Canada ICES-003 Compliance:CAN ICES-3(B)/NMB-3(B)

Mechanical safety

Warning

To avoid the device falling off and personal injury, place the device on a level surface that meets the load-bearing requirements and ensure that the device cannot be easily moved.

Components safety

Warning

Only the software that has been provided by the manufacturer can be installed and used on the computer. Unknown software might interfere with normal device functions, or even cause data loss. If you need to install antivirus software, contact the technical support in advance.

Caution

- Do not uninstall the control software by yourself. If any problem occurs during software operation, contact the technical support.
- Ensure that the peripheral devices meet the IEC/EN 60950-1 standards.

Biological safety

- Chemicals in reagents and waste might cause personal injury through contact with the skin, eyes and mucosa. Follow the safety standards of your laboratory and wear protective equipment (such as laboratory coat, and disposable bouffant cap, protective glasses, mask, gloves, and shoe covers) when performing an experiment.
- If you accidentally splash the reagent on the skin or into eyes, immediately flush the affected area with large amounts of water and get medical aid immediately.
- Use and store the reagents according to the reagent kit user manual. Failure to do so might negate the reagent effects and cause inaccurate results.
- Check the expiration date of all reagents before use. Do not use expired reagents.
- When disposing of the expired reagents, waste liquid, waste sample and consumables, comply with local regulations.

Symbols

Device

The following table describes symbols on the device:

Symbol	Name	Description
ON	"ON" (power)	Indicates connection to the mains supply.
OFF	"OFF" (power)	Indicates disconnection from the mains supply.
	General warning sign	Signifies a general warning.
	Warning; biological hazard	Warns of a hazard from a biological hazard.
	Caution; hot surface	Indicates that the marked item can be hot and should not be touched without taking care.
	Warning; dangerous voltage	Indicates hazards arising from dangerous voltages.
	Protective earth	Indicates the terminal of a protective earth (ground) electrode.
SBC-LAN	Network port	Connects to the network.
BCS-LAN	Network port	Connects the server to the network.
SBC-USB 3.0	USB 3.0 port	Connects USB devices such as the keyboard and mouse to the IPC.
BCS-USB 3.0	USB 3.0 port	Connects USB devices such as the keyboard and mouse to the server.
VGA	VGA port	Used for display adjustment.
BCS-Fiber	Optical fiber port	10 Gigabit network port.

Symbol	Name	Description
RFID	RFID (Radio frequency identification) reader indication	Scans the ID of the flow cell or cartridge placed near the area.

Label

The following table describes symbols on the label:

Symbol	Name	Description
Research Use Only	/	Indicates a device that is for research use only, and cannot be used for clinical diagnosis.
	Manufacturer	Indicates the medical device manufacturer.
	Date of manufacture	Indicates the date when the medical device was manufactured.
EC REP	Authorized representative in the European Community	Indicates the authorized representative in the European Community.
RoHS	RoHS mark	Indicates that this device meets the requirements of Directive 2011/65/EU on the restriction of the use of certain hazardous substances in electrical and electronic equipment.
CE	CE mark of conformity	Indicates that this device conforms with the specified Council Directive.
MET C US E115163	NRTL Listing and Certification Mark	Used to designate conformance to nationally recognized product safety standards. The Mark bears the name and/or logo of the testing laboratory, product category, safety standard to which conformity is assessed and a control number.

Symbol	Name	Description
	WEEE symbol	Indicates that waste electrical and electronic equipment must not be disposed of as unsorted municipal waste and must be collected separately. Please contact an authorized representative of the manufacturer for information concerning the decommissioning of your equipment.
SN	Serial number	Indicates the manufacturer's serial number so that a specific medical device can be identified.
	Consult instructions for use	Indicates the need for the user to consult the instructions for use.

Packaging

The following table describes symbols on the packaging or on the label of the packaging:

Symbol	Name	Description
	This way up	Indicates the correct upright position of the distribution package for transport and/or storage.
	Fragile, handle with care	Indicates a medical device that can be broken or damaged if not handled carefully.
	Keep dry	Indicates a medical device that needs to be protected from moisture.
	Do not stack	Indicates that stacking of the distribution package is not allowed and no load shall be placed on the transport package.

Symbol	Name	Description
	Do not roll	Indicates that the transport package shall not be rolled or turned over but shall remain in the upright position.
	Temperature limit	Indicates the temperature limits to which the medical device can be safely exposed.
	Humidity limitation	Indicates the range of humidity to which the medical device can be safely exposed.
	Atmospheric pressure limitation	Indicates the range of atmospheric pressure to which the medical device can be safely exposed.

Device overview

This chapter describes the intended use, working principle, and structural composition of the device.

Intended use

The device is a sequencing instrument that measures optical and electronic signals of the reporting molecules to decode the sequence information of a piece of DNA or RNA fragment through the use of instrument specific reagents and flow cells imaging hardware, and data analysis software. The device is intended for decoding the sequence of DNAs or RNAs prepared into specific sequencing libraries such as DNA nanoball libraries. It can be used for whole genome sequencing and de novo sequencing.

Warning This device is intended only for scientific research and should not be used for clinical diagnosis.

Working principle

The device adopts the advanced DNA Nanoball (DNB) and the core technology of combinatorial probe-anchor synthesis (cPAS) and uses a regular arrayed flow cell with the special decorated surface. Each decorated site of the flow cell contains a single DNB, and the decorated site is evenly arranged on the flow cell, ensuring that the optical signal of different Nanoball cannot be interrupted by each other. Therefore, the accuracy of signal process is improved.

The following figure demonstrates how to make DNBs:

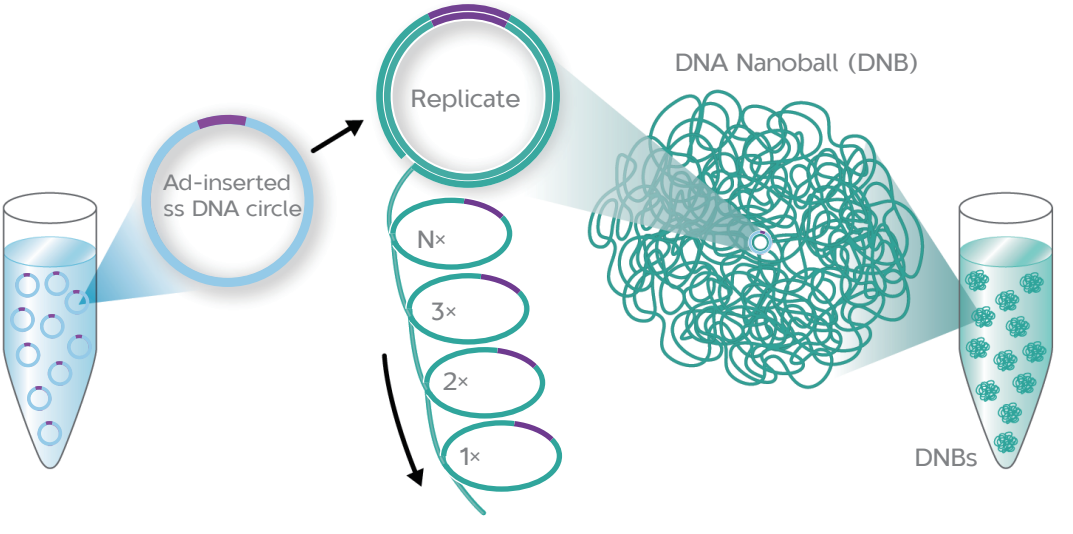

Figure 1 Making DNBs

The following figure demonstrates how to load DNBs:

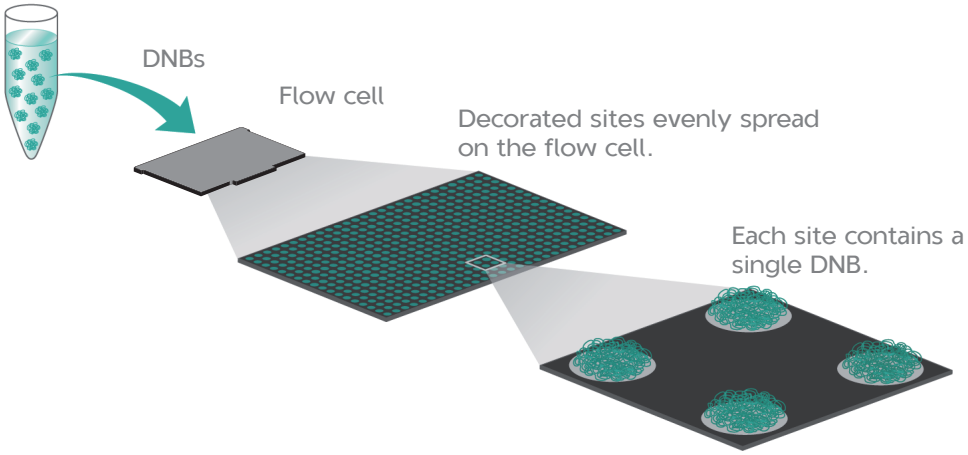

Figure 2 Loading DNBs

The DNB and sequencing reagent are pumped into the sequencing flow cell through the device's liquid system. Each DNB combines with the fluorescence group. The laser excites the fluorescence group to emit light, and the optical signals are acquired by the camera. Then the optical signals are processed and transferred to digital signals, the digital signal is transmitted to and processed by the computer, so as to acquire the nucleotide sequence of the DNB.

Structural composition

The device consists of the main unit and pre-installed control software (software version: V1). The main unit includes the main structure, host, optical system, XYZT-stage, flow cell stage, gas-liquid system, electric control system, reagent storage system, power supply system, display system, robotic arm, flow cell drive, and flow cell retrieval compartment.

The following table describes functions of each component:

Item	Description
Main structure	Provides the stable support for the main unit.
Host	Controls the device, collects, analyzes, and stores data.
Optical system	Images the fluorescence signal on the flow cell.
XYZT-stage	Moves the flow cell and focuses automatically.

Item	Description
Flow cell stage	Connects the flow cell to fluidics lines and controls the temperature of the flow cell.
Gas-liquid system	Provides the gas-liquid support that is required for the biochemical reaction.
Electric control system	Controls the electric system.
Reagent storage system	Provides the reagent storage environment.
Power supply system	Provides the power supply for the device.
Display system	Provides the human-computer interaction interface.
Robotic arm	Transfers and loads flow cells.
Flow cell drive	Loads a flow cell for sequencing or washing.
Flow cell retrieval compartment	Holds used flow cells.

Basic components

Front view

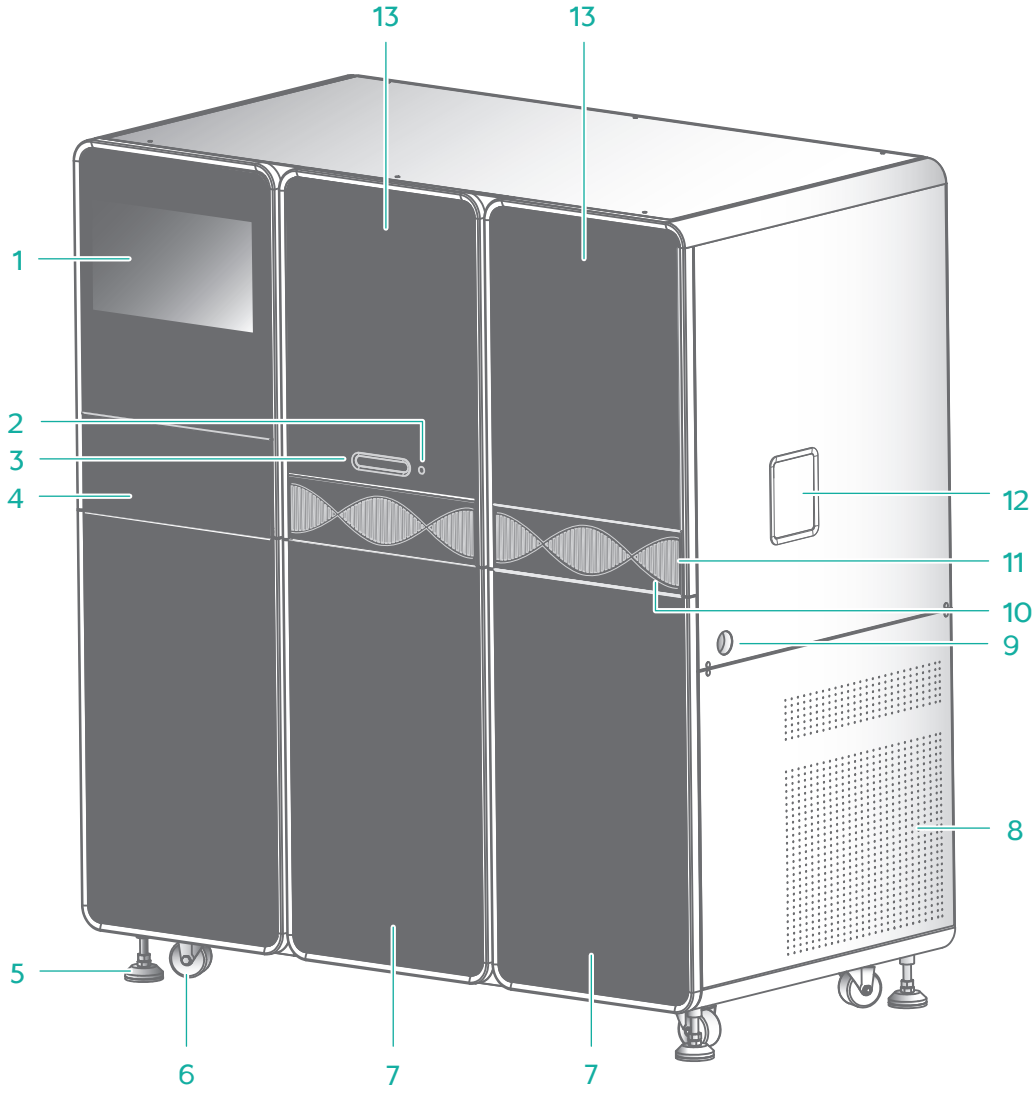

Figure 3 Front view

No.	Name	Description
1	Touch screen monitor	Facilitates on-screen operation and displays information.
2	Flow cell drive button	Touch to eject the flow cell drive.

No.	Name	Description
3	Flow cell drive	Entry of the flow cell. Tap the flow cell drive button to eject the flow cell drive.
4	Operation panel	You can power on or off the IPC, and connect USB devices in this area, such as the keyboard and mouse.
5	Supporting feet	Supports the main unit to ensure stability.
6	Caster	Used for moving the device.
7	Reagent compartment	Holds reagent kits and samples at appropriate temperatures. You can press to open the door.
8	Ventilation inlet	Ventilates the device.
9	Waste container port	Used for connecting the waste container.
10	LED status bar	Displays the current status of the device: ● Green: the device is running. ● Blue: the device is in standby status. ● Red: an error occurs. ● Yellow: a warning appears.
11	Ventilation inlet	Air enters the air filter in the device through this inlet.
12	Flow cell retrieval compartment	Retrieves used flow cells.
13	Fluidics maintenance door	Used by the technical support or trained personnel to maintain the fluidics system.

Keyboard and ports

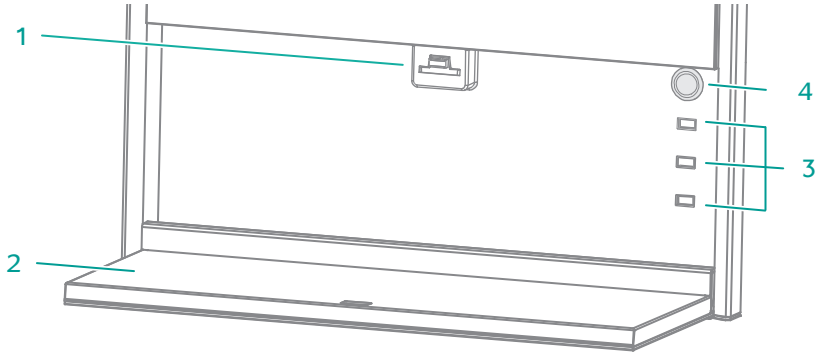

Figure 4 Keyboard and ports

No.	Name	Description
1	Keyboard tray latch	Used to fix the keyboard tray.
2	Keyboard tray	Used to support the keyboard and mouse. When not in use, fold the keyboard tray and press it towards the latch until you hear a click.
3	USB 3.0 port	Connects to USB devices such as the keyboard and mouse.
4	Host power button	Press to power on or off the computer.

Reagent compartment

The reagent compartments include the sequencing cartridge compartments and washing cartridge compartments. The system automatically identifies the QR code of the reagent cartridges by built-in RFID readers.

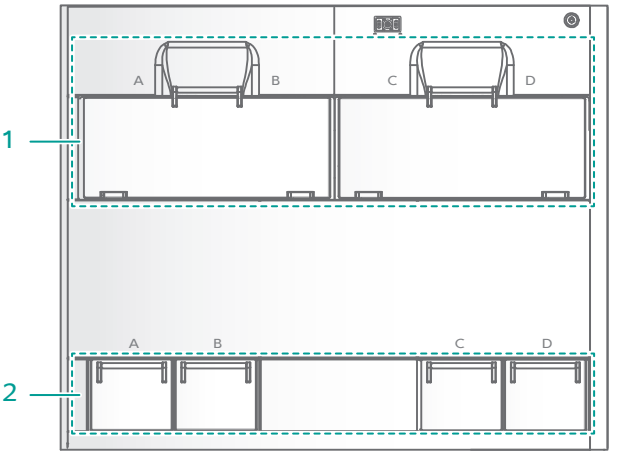

Figure 5 Reagent compartment

No.	Name	Description
1	Sequencing cartridge compartment	Holds the sequencing cartridges at appropriate temperatures.
2	Washing cartridge compartment	Holds the washing cartridges.

Flow cell

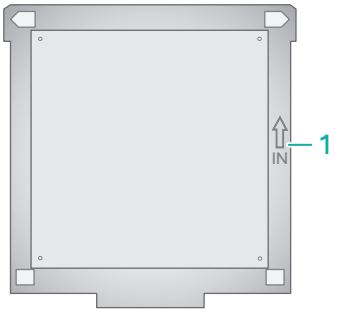

Figure 6 Flow cell

No.	Name	Description
1	Flow cell orientation marker	Shows the direction of placing the flow cell.

Rear view

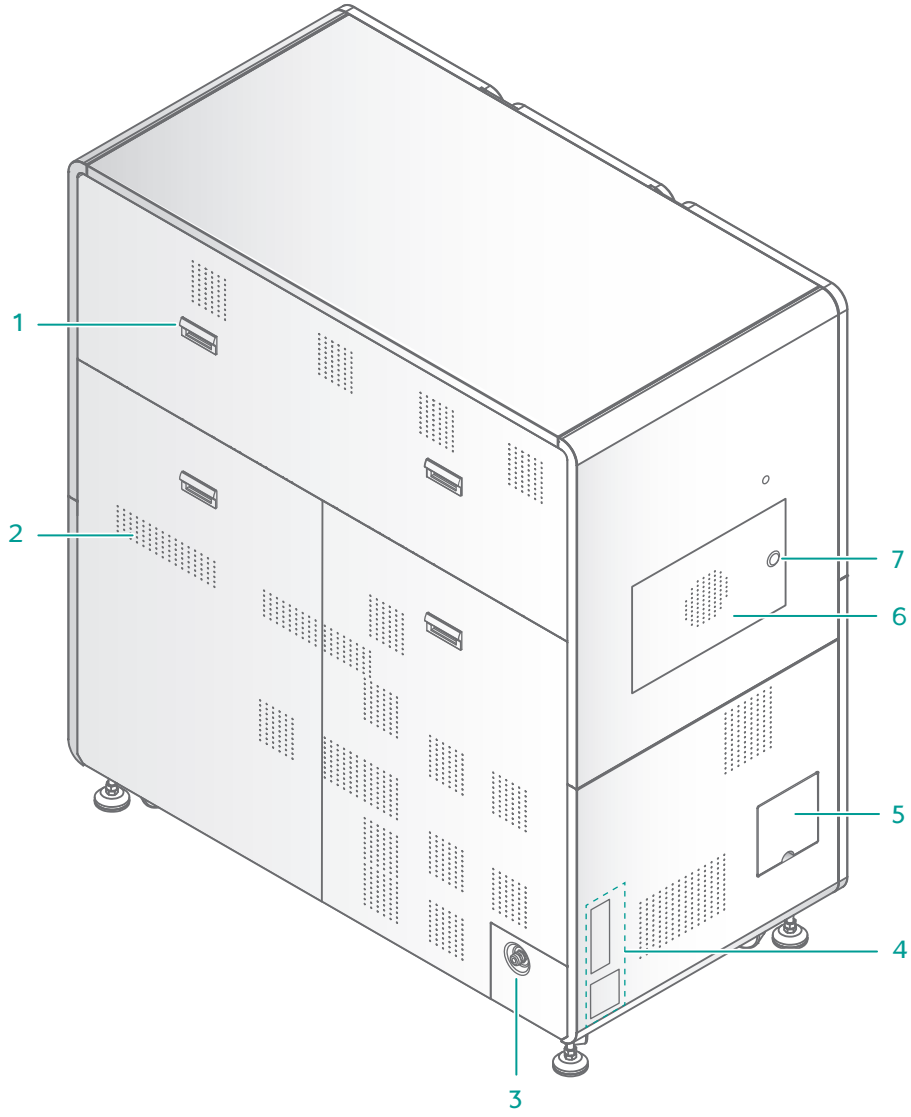

Figure 7 Rear view

No.	Name	Description
1	Handle	Holds it to easily disassemble the rear panel during maintenance.

No.	Name	Description
2	Ventilation outlet	Ventilates the device.
3	Power inlet	Connects to the power cord.
4	Ports	Used for cable connections.
5	Pure water container port	Connects to the pure water container.
6	Optics maintenance door	Used by the technical support to maintain the optical system.
7	Maintenance door button	Used for opening the door after unlocking.

Ports

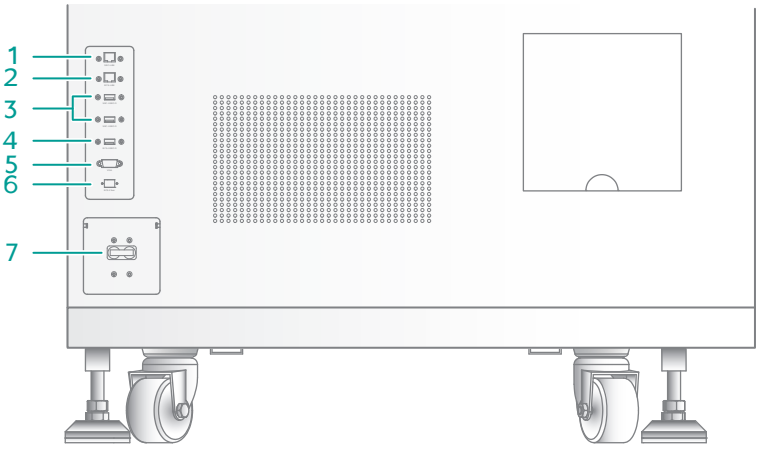

Figure 8 Ports

No.	Name	Description
1	Network port 1	Connects the IPC to the network.
2	Network port 2	Connects the server to the network.
3	USB 3.0 port 1	Connects USB devices such as the keyboard and mouse to the IPC.
4	USB 3.0 port 2	Connects USB devices such as the keyboard and mouse to the server.
5	VGA port	Connects to the LCD screen for adjustment.
6	Optical fiber port	10 Gigabit network port.

No.	Name	Description
7	Power switch	Powers on or off the device: ● Switch to the ON position to power on the device. ● Switch to the OFF position to power off the device.

Control software

The system control software initiates the communication protocol through physical ports to coordinate with the hardware, control gas lines, fluidics lines, temperature, mechanical components, and optical components. The software detects the signal on the sequencing flow cell, transfers the photographic information to the base sequence files in standard format, and guides different users to perform different processes, such as maintenance and experimental protocols.

The following table describes the function of each functional module:

Item	Description
Self-test	Checks whether the components of the system are functional.
Sequence	Performs different types of sequencing processes.
Wash	Performs wash and maintenance for fluidics lines of the system.

NOTE
- Because the flow cell stages have the same functions, flow cell stage A is used as an example in the subsequent sections.
- For interface control, you can use the touch screen monitor or keyboard and mouse.

Self-test interface

After you power on the device, self-test starts. If the self-test succeeds, the main interface appears.

If the self-test fails, perform the following steps:

1. In the main interface, tap , and select **Log** to check the detailed self-test results that are recorded in the log.

2. Follow the on-screen instructions or the solutions that are mentioned in *Troubleshooting on Page 52*.
3. Perform self-test again:
   - Tap , select **Maintenance** > **Self-test**.
   - Tap , select **Shut down** > **Restart**.

If the problem persists, contact the technical support.

Main interface

The main interface appears after a successful self-test, as shown in the figure below:

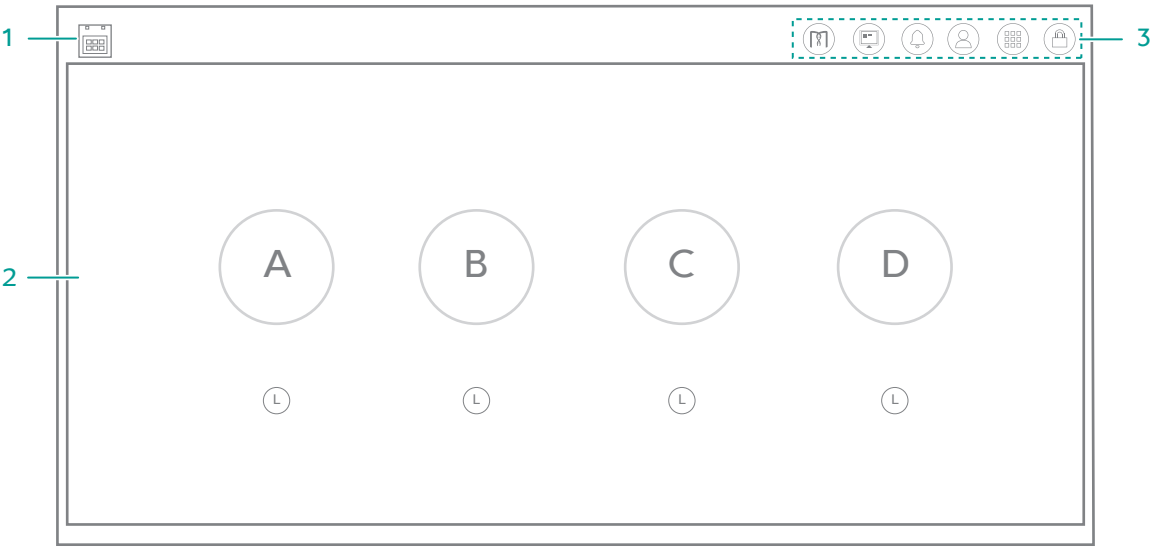

Figure 9 Main interface

The following table describes the function of each area or icon in the main interface:

No.	Name	Description
1		Displays the local date and time.
2	Operation area	Indicates the status of flow cells and provides wash and sequence options when enter the main interface of the selected flow cell stage.
3	Menu area	Press the buttons to perform relative operations.

Tap on a flow cell stage name and you can enter the main interface of the selected flow cell stage.

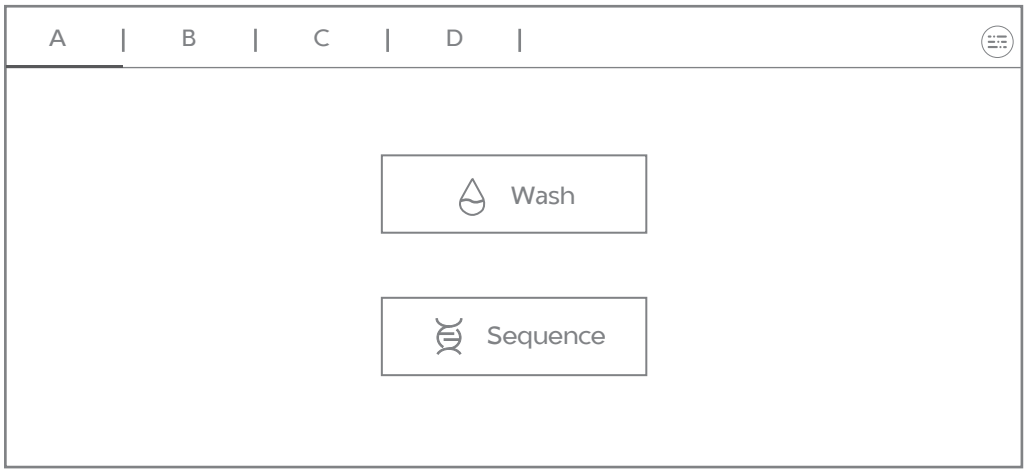

Figure 10 Main interface A

Menu area

The following table describes the function of menu buttons.

Item	Description
	Tap to return to the main interface when the flow cell stage is not preparing for sequencing or washing.
	Sensor status indicator. Tap to check the status of sensors for all flow cell stages. A red dot appears on the icon when an error occurs.
	Tap to view prompt details. The prompt icon includes the following status: ● Yellow: a warning appears. ● Red: an error occurs.
	Tap to log in to the system.
	Menu button. When the device is in idle or paused statues, you can tap this button to view the system information or logs, or perform system maintenance. Otherwise, you can only tap to view the system information and logs.

Item	Description
	After logging into the system, you can tap this button to lock the screen.

The following table describes the function of the sensor status indicators in the menu area.

Item	Description
Zlims	Connection status with ZLIMS.
	Disk space status.
	Device temperature status. The real-time value is displayed on the left.
	Device humidity status. The real-time value is displayed on the left.
	Waste level status of the built-in waste container. If error indication appears, contact the technical support.

The following table describes the function of the sensor status indicators on the main interface of the selected flow cell stage.

Item	Description
	Tap to view the status of sensors of the selected flow cell stage.
AC TG	Zebracall connection status.
	Fluidics chuck vacuum. The real-time value is displayed on the left.
	Imager vacuum. The real-time value is displayed on the left.
	Fluidics chuck temperature. The real-time value is displayed on the left.
	Sequencing cartridge compartment temperature. The real-time value is displayed on the left.

Operation area

The following table describes the function of icons or information in the area:

Item	Description
A	Flow cell stage name. If an error occurs in a flow cell stage, an error indicator appears on the progress bar.
xx%	Task progress
	The flow cell stage is under sequencing.
	The fluidics lines of the flow cell stage are under washing.
L	The flow cell stage is in idle status.
---	The flow cell stage is preparing for sequencing or washing.
	Sequencing or washing is being paused.
II	Sequencing or washing is paused.
—	Sequencing or washing is being stopped.

Log interface

You can view the log in this interface.

To open the log interface, tap in the main interface, and select **Log**.

The following table describes the function of controls in the interface:

Item	Description
☒	Tap to exit the log interface and return to the previous interface.
All	Tap to view all types of logs.
Info	Tap to view information-type logs.
Warning	Tap to view warning-type logs.
Error	Tap to view error-type logs.
	Tap to select the date in the pop-up calendar.
Flow cell	Select the check box to view the logs of a flow cell.
Sort by	Set the display order of the logs.

Settings interface

You can manage recipes and change system settings in this interface.

To open the settings interface, log in to your account, tap , and select **Settings**.

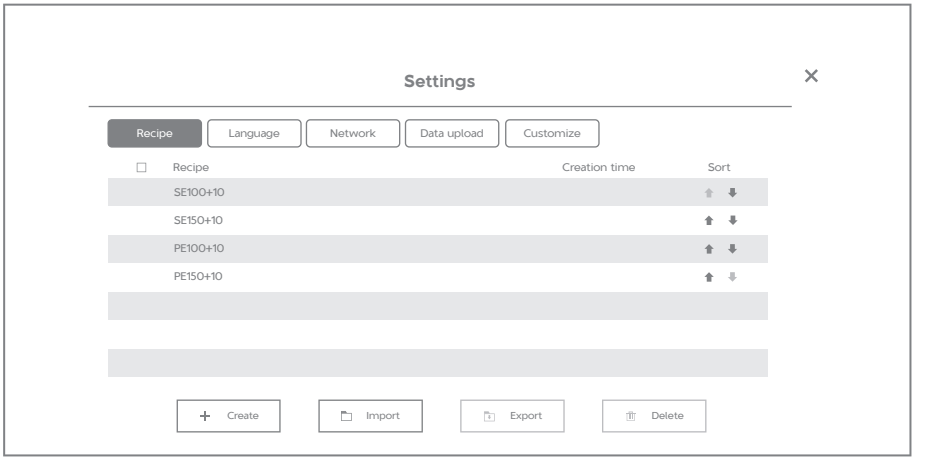

Figure 11 Settings interface

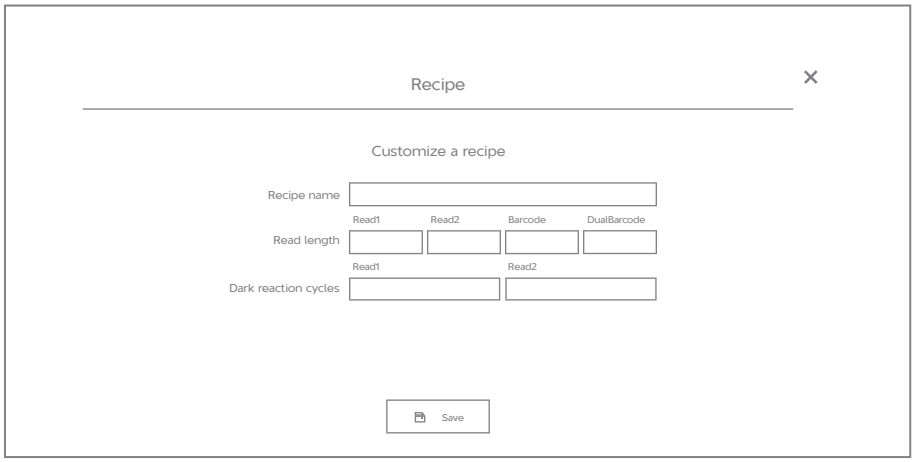

Figure 12 Recipe interface

The following table describes the function of controls in the interface:

Item	Description
Recipe	Tap **Recipe** to enter the Recipe interface. In this interface, you can: ● Tap **Sort** to change the display order of the recipes. ● Tap **Create** to customize a recipe. ● Tap **Import** to import recipes. ● Tap **Export** to export customized recipes. ● Tap **Delete** to delete the customized or imported recipes.
Language	Tap to change the language of the software. Restart the computer to apply the changes.
Network	Input the IP address and port number of the ZLIMS server. Modification takes effect after restarting the computer.
Data upload	Tap to set data processing methods.
Customize	Tap to change the wait time before the screen locks automatically. Move the slider to change the volume of the buzzer.

Maintenance interface

You can empty the fluidics line and perform self-test in this interface.

To open the maintenance interface, log in to your account, tap , and select **Maintenance**.

The following table describes the function of controls in the interface:

Item		Description
Device maintenance	**Cleaning tool replacement**	Tap to replace the cleaning tool.
	Empty fluidics line	Tap this button and select a flow cell stage to discharge the residual liquid in its fluidics line to the waste container.
	Self-test	Tap to perform a self-test for the hardware of the device. The result of each item is displayed in the interface. After self-test, you will be prompted that the self-test is finished.
Door control	**Unlock optics maintenance door**	Tap to unlock the optics maintenance door. Only the technical support or trained personnel can maintain the optical system.
	Unlock fluidics maintenance door	Tap to unlock the fluidics maintenance door. Only the technical support or trained personnel can maintain the fluidics system.

Shutdown or restart interface

You can shut down or restart the computer in this interface.

To open the shutdown or restart interface, tap and select **Shut down**.

About interface

You can view the software version, serial number, and other information of the device, and the manufacturer information in this interface.

To open the About interface, tap and select **About**.

Getting started

This chapter describes laboratory preparations and sequencing preparations.

Site requirements

Caution

- Ensure that the laboratory floor is level and with a gradient of less than 1/200.
- Ensure that the laboratory is free of dust, corrosive and flammable gas, and heat and wind sources.
- Ensure that the laboratory is away from direct sunlight and is well ventilated. We recommend that you refer to the standard of a biosafety level (BSL) 2 laboratory.
- We recommend that you use a clean laboratory with ISO Class 8 air cleanliness. Ensure that air can be circulated inside the laboratory but cannot be circulated to other laboratories.
- The device should be used with the ultra-pure water machine, refrigerator, and DNB loader, and can be used with the library preparation system. Therefore, enough space should be considered when placing the above instruments.
- Ensure that enough space is provided around the device for ventilation, cable connection, and power switch operation.

The following figure indicates distances that are required for optimal operation and access.

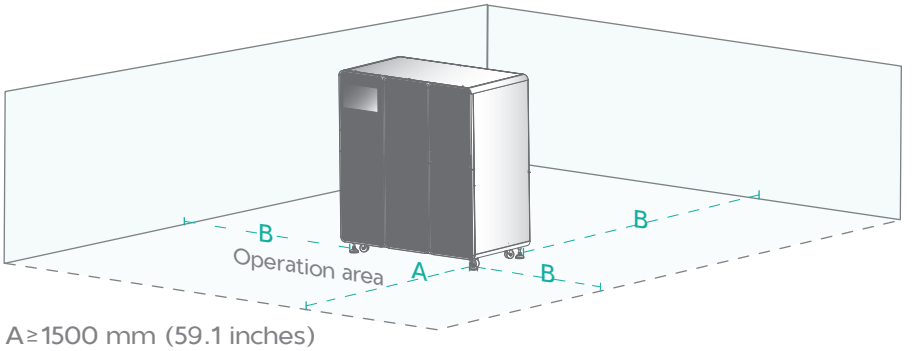

A≥1500 mm (59.1 inches)
B≥1000 mm (39.4 inches)

Figure 13 Space requirements

Network requirements

Operating environments of the computer

Minimum configuration

Processor: Intel Core i7-7700

Software environments

Warning Only the software that has been provided by the manufacturer can be installed and used on the computer. Because unknown software might interfere with normal device functions, or even cause data loss. If you need to install antivirus software, contact the technical support in advance.

- Software architecture: C/S
- Pre-installed software on the computer includes:
  - Control software
  - Microsoft Windows10 64-bit operating system
  - Microsoft .Net Framework 4.6.1 and above
  - IronPython 2.7.9

Network conditions

- Network type: local network
- Network bandwidth: no less than 10 Gbit/s

Software security

If you need to install antivirus software, contact the technical support in advance.

Data and computer ports

- Network ports: connects to the network.
- USB ports: connect to external USB devices, such as the keyboard and mouse, or for future use.

Access control

Only the user authorized by the manufacturer can use the control software.

Installing the device

The device can be installed only by the technical support. And accompanying items such as the keyboard and mouse will be connected.

To ensure that the performance of the device meets the specifications, the technical support will perform a standard sequencing run before customer training and use.

Powering on or off the device

Caution

- Ensure that the power switch is in the OFF position before connecting to the power supply.
- Ensure that the grounding cable is connected in accordance with the relevant standard or under the guidance of an experienced electrician.
- Only the power cord of the manufacturer can be used, and the power cord can be only used with this device. Failure to do so might damage the power cord or device.

Powering on the device

Perform the following steps:

1. If a UPS is prepared, connect the UPS to the device.
2. Turn the power switch of the device to the ON position.

   After you power on the device, self-test begins.

Powering off the device

NOTE Before you power off the device, ensure that the sequencing run and wash are completed, the control software is shut down, and the flow cell drive is withdrawn. Failure to do so might damage the device.

Perform the following steps:

1. Tap , select **Shut down**. In the pop-up dialog box, select **Shut down**.
2. Turn the power switch to the OFF position.

Inspecting the device

Caution

- Only the technical support of the manufacturer or trained personnel can unpack the device. Contact the technical support to unpack and install the device upon delivery. Failure to do so will void the warranty.
- Ensure that the outer package is intact and the indicator status of the anti-shock and anti-tilt label is normal upon delivery. If any problem occurs, contact the technical support.

The device contains precise components. Therefore, anti-shock and anti-tilt labels are posted on the outer packaging to monitor any effects of transportation.

The following table describes indicator status on the label:

Table 1 Indicator status

Label	Indicator status	Description
Anti-shock label	Remains unaffected	Indicates that the device is intact and no strong collision occurs during transportation, or the intensity does not exceed the limit.
	Red	Indicates that the device might not be intact and that a strong collision occurs during transportation and the intensity exceeds the limit.
Anti-tilt label	Remains unaffected	Indicates that no tilt occurs, or the gradient does not exceed the limit.
	Red	Indicates that tilt occurs, and the gradient exceeds the limit.

Preparing the power supply

Caution

- To ensure a steady and uninterrupted power supply to the device during operation, we recommend the use of a separate UPS. For details about the UPS installation protocol, consult the UPS supplier.
- The required power supply of the UPS should be no less than 5 kVA. Connect the power cord of the device to the output port of the UPS.
- Ensure that the voltage meets the requirement to prevent poor performance of electric components. Failure to do so might damage electrical components.

Table 2 Power specifications

Item	Description
Voltage and frequency range	200 V - 240 V~, 50/60 Hz
Voltage fluctuation	±10%
Rated power	3000 VA
Transient over-voltage category	II

Preparing peripheral devices

Table 3 Peripheral devices

Device	Recommended supplier	Remarks
DNB loader	The manufacturer	/
Sample preparation system	The manufacturer	/
Ultra-pure water machine	General laboratory supplier	/
Frost-free freezers or refrigerators	/	Temperature ranges (according to requirements): ● 2 ℃ to 8 ℃ (36 ℉ to 46 ℉) ● -18 ℃ to - 25 ℃ (-0.4 ℉ to -13 ℉)

Preparing samples

We recommend that you use the library preparation system of the manufacturer to prepare samples. For details, refer to the relevant user manual.

Preparing the reagent cartridge and flow cell

Chemicals in reagents and waste might cause personal injury through contact with the skin, eyes, and mucosa. Follow the safety standards of your laboratory and wear protective equipment (such as laboratory coat, and disposable bouffant cap, protective glasses, mask, gloves, and shoe covers) when performing a sequencing run.

Reagent cartridge and sequencing flow cell

Use only the reagent cartridge and flow cell of the manufacturer for the sequencing process. You can purchase them as needed from the authorized sales representatives.

Remove the sequencing reagent cartridge from storage and prepare it for sequencing. For details, refer to relevant reagent kit user manual.

After preparing the sequencing reagent cartridge, place it at 2 ℃ to 8 ℃ (35.6 ℉ to 46.4 ℉).

NOTE If the sequencing reagent cartridge is not used immediately, store the cartridge at appropriate temperatures as required. Thaw the cartridge thoroughly before performing a sequencing run.

Washing cartridge and washing flow cell

Washing cartridges are delivered with the device for wash procedures. Used sequencing flow cells function as washing flow cells.

For how to prepare the cartridge, contact the technical support. And for how to perform a wash manually, refer to *Performing a wash on Page 50*.

NOTE Extra washing reagents are not provided by the manufacturer, but you can purchase them as needed from the authorized sales representatives.