FCC Radio Test Report

FCC ID: 2A6VF-AC01

Original Grant

Report No.	:	TBR-C-202203-0164-63
Applicant	:	Averia Electronics Inc.
Equipment Under Test (EUT)		
EUT Name	:	Averia Collar
Model No.	:	AC01
Series Model No.	:	AC02
Brand Name	:	Averia
Sample ID	:	202203_0164-01 & 202203_0164-02
Receipt Date	:	2022-04-21
Test Date	:	2022-04-21 to 2022-09-06
Issue Date	:	2022-09-16
Standards	:	47 CFR Part 2, 22(H), 24(E), 27
Test Method	:	ANSI C63.26 2015
Conclusions	:	**PASS**

In the configuration tested, the EUT complied with the standards specified above,

The EUT technically complies with the FCC requirements

Test/Witness Engineer	:	Camille Li
Engineer Supervisor	:	Ivan Su
Engineer Manager	:	Ray Lai

This report details the results of the testing carried out on one sample. The results contained in this test report do not relate to other samples of the same product. The manufacturer should ensure that all products in series production are in conformity with the product sample detailed in the report.

1/F.,Building 6, Rundongsheng Industrial Zone, Longzhu, Xixiang, Bao'an District, Shenzhen, Guangdong, China
Tel: +86 75526509301 Fax: +86 75526509195

Contents

CONTENTS **2**
1. GENERAL INFORMATION ABOUT EUT **6**
1.1 Client Information 6
1.2 General Description of EUT (Equipment Under Test) 6
1.3 Block Diagram Showing the Configuration of System Tested 13
1.4 Description of Support Units 13
1.5 Description of Test Mode 14
1.6 Measurement Uncertainty 15
1.7 Test Facility 16
2. TEST SUMMARY **17**
3. TEST EQUIPMENT **19**
4. CONDUCTED RF OUTPUT POWER **22**
4.1 Test Standard and Limit 22
4.2 Test Setup 22
4.3 Test Procedure 22
4.4 EUT Operating Condition 22
4.5 Deviation From Test Standard 22
4.6 Test Data 22
5. PEAK-AVERAGE RATIO **23**
5.1 Test Standard and Limit 23
5.2 Test Setup 23
5.3 Test Procedure 23
5.4 EUT Operating Condition 23
5.5 Deviation From Test Standard 23
5.6 Test Data 23
6. OCCUPIED BANDWIDTH **24**
6.1 Test Standard and Limit 24
6.2 Test Setup 24
6.3 Test Procedure 24
6.4 EUT Operating Condition 25
6.5 Deviation From Test Standard 25
6.6 Test Data 25

7. OUT OF BAND EMISSION AT ANTENNA TERMINALS 26
7.1 Test Standard and Limit 26
7.2 Test Setup 26
7.3 Test Procedure 27
7.4 EUT Operating Condition 27
7.5 Deviation From Test Standard 27
7.6 Test Data 27
8. BAND EDGE TEST 28
8.1 Test Standard and Limit 28
8.2 Test Setup 28
8.3 Test Procedure 28
8.4 EUT Operating Condition 29
8.5 Deviation From Test Standard 29
8.6 Test Data 29
9. RADIATED OUTPUT POWER 30
9.1 Test Standard and Limit 30
9.2 Test Setup 30
9.3 Test Procedure 31
9.4 EUT Operating Condition 31
9.5 Deviation From Test Standard 31
9.6 Test Data 32
10. RADIATED OUT BAND OF EMISSIONS 33
10.1 Test Standard and Limit 33
10.2 Test Setup 33
10.3 Test Procedure 33
10.4 EUT Operating Condition 34
10.5 Deviation From Test Standard 34
10.6 Test Data 34
11. FREQUENCY STABILITY 35
11.1 Test Standard and Limit 35
11.2 Test Setup 35
11.3 Test Procedure 36
11.4 EUT Operating Condition 36
11.5 Deviation From Test Standard 36
11.6 Test Data 36

ATTACHMENT A--RADIATED OUTPUT POWER.....37
ATTACHMENT B--RADIATED OUT BAND OF EMISSIONS 48

Revision History

Report No.	Version	Description	Issued Date
TBR-C-202203-0164-63	Rev.01	Initial issue of report	2022-09-16

1. General Information about EUT

1.1 Client Information

Applicant	:	Averia Electronics Inc.
Address	:	142W 57th Street, Floor 11, New York, NY 10019
Manufacturer	:	Averia Electronics Inc.
Address	:	142W 57th Street, Floor 11, New York, NY 10019

1.2 General Description of EUT (Equipment Under Test)

EUT Name	:	Averia Collar	
Model(s)	:	AC01, AC02	
Model Difference	:	All PCB boards and circuit diagrams are the same, The difference is only Silicone holder design.	
Product Description	:	Frequency Bands: LTE Band 2: TX: 1850MHz-1910MHz, RX: 1930MHz-1990MHz LTE Band 4: TX: 1710MHz-1755MHz, RX: 2110MHz-2155MHz LTE Band 5: TX: 824MHz-849MHz, RX: 869MHz-894MHz LTE Band 12: TX: 699MHz -716MHz, RX: 729MHz-746MHz LTE Band 13: TX: 777MHz -787MHz, RX: 746MHz-756MHz	
		Antenna Gain:	LTE Band 2:1.8dBi Internal Antenna LTE Band 4: 1.8dBi Internal Antenna LTE Band 5: 2.8dBi Internal Antenna LTE Band 12: 2.8dBi Internal Antenna LTE Band 13: 2.8dBi Internal Antenna
		Modulation Type:	QPSK, 16QAM
		Bandwidth:	LTE Band 2 :1.4MHz/3MHz/5MHz/10MHz/15MHz/20MHz LTE Band 4 :1.4MHz/3MHz/5MHz/10MHz/15MHz/20MHz LTE Band 5 :1.4MHz/3MHz/5MHz/10MHz LTE Band 12 :1.4MHz/3MHz/5MHz/10MHz LTE Band 13 :5MHz/10MHz
Power Rating	:	Input: DC 5V, 2A Max DC 3.7V by 260mAh Rechargeable Li-ion battery*2	
Software Version	:	0.2.x	

Hardware Version	:	AECP12_MB_11_07
Remark	:	The antenna gain and adapter provided by the applicant, the verified for the RF conduction test provided by TOBY test lab.

Note:

(1) For a more detailed features description, please refer to the manufacturer's specifications or the User's Manual.

(2) Channel List

LTE Band 2(1.4MHz)		LTE Band 2(3MHz)	
Channel	**Frequency (MHz)**	**Channel**	**Frequency (MHz)**
18607	**1850.70**	**18615**	**1851.50**
18608	1850.80	18616	1851.60
…...	……	…...	……
18899	1879.90	18899	1879.90
18900	**1880.00**	**18900**	**1880.00**
18901	1880.10	18901	1880.10
……	…..	……	…..
19192	1909.20	19184	1905.40
19193	**1909.30**	**19185**	**1908.50**

LTE Band 2(5MHz)		LTE Band 2(10MHz)	
Channel	**Frequency (MHz)**	**Channel**	**Frequency (MHz)**
18625	**1852.50**	**18650**	**1855.00**
18616	1853.60	18626	1854.90
…...	……	…...	……
18899	1879.90	18899	1879.90
18900	**1880.00**	**18900**	**1880.00**
18901	1880.10	18901	1880.10
……	…..	……	…..
19174	1908.40	19149	1907.90
19175	**1907.50**	**19150**	**1905.00**

LTE Band 2(15MHz)		LTE Band 2(20MHz)	
Channel	**Frequency (MHz)**	**Channel**	**Frequency (MHz)**
18675	**1857.50**	**18700**	**1860.00**
18676	1857.60	18701	1860.10
…...	……	…...	……
18899	1879.90	18899	1879.90
18900	**1880.00**	**18900**	**1880.00**
18901	1880.10	18901	1880.10
……	…..	……	…..
19124	1902.40	19099	1899.90
19125	**1902.50**	**19100**	**1900.00**

LTE Band 4(1.4MHz)		LTE Band 4(3MHz)	
Channel	**Frequency (MHz)**	**Channel**	**Frequency (MHz)**
19957	**1710.70**	**19965**	**1711.50**
19958	1710.80	19966	1711.60
…...	……	…...	……
20174	1732.40	20174	1732.40
20175	**1732.50**	**20175**	**1732.50**
20176	1732.60	20176	1732.60
……	…..	……	…..
20392	1754.20	20384	1753.40
20393	**1754.30**	**20385**	**1753.50**

LTE Band 4(5MHz)		LTE Band 4(10MHz)	
Channel	Frequency (MHz)	Channel	Frequency (MHz)
19975	**1712.50**	**20000**	**1715.00**
19976	1712.60	20001	1715.10
…...	……	…...	……
20174	1732.40	20174	1732.40
20175	**1732.50**	**20175**	**1732.50**
20176	1732.60	20176	1732.60
……	…..	……	…..
20374	1752.40	20349	1749.90
20375	**1752.50**	**20350**	**1750.00**

LTE Band 4(15MHz)		LTE Band 4(20MHz)	
Channel	Frequency (MHz)	Channel	Frequency (MHz)
20025	**1717.50**	**20050**	**1720.00**
20026	1717.60	20051	1720.10
…...	……	…...	……
20174	1732.40	20174	1732.40
20175	**1732.50**	**20175**	**1732.50**
20176	1732.60	20176	1732.60
……	…..	……	…..
20324	1747.40	20299	1744.90
20325	**1747.50**	**20300**	**1745.00**

LTE Band 5(1.4MHz)		LTE Band 5(3MHz)	
Channel	Frequency (MHz)	Channel	Frequency (MHz)
20407	**824.70**	**20415**	**825.50**
20408	824.80	20416	825.60
…...	……	…...	……
20524	836.40	20524	836.40
20525	**836.50**	**20525**	**836.50**
20526	836.60	20526	836.60
……	…..	……	…..
20643	848.20	20634	847.40
20643	**848.30**	**20635**	**847.50**

LTE Band 5(5MHz)		LTE Band 5(10MHz)	
Channel	Frequency (MHz)	Channel	Frequency (MHz)
20425	**826.50**	**20450**	**829.00**
20426	826.60	20451	829.10
…...	……	…...	……
20524	836.40	20524	836.40
20525	**836.50**	**20525**	**836.50**
20526	836.60	20526	836.60
……	…..	……	…..
20624	846.40	20599	843.90
20625	**846.50**	**20600**	**844.00**

LTE Band 12(1.4MHz)		LTE Band 12(3MHz)	
Channel	Frequency (MHz)	Channel	Frequency (MHz)
23017	**699.70**	**23025**	**700.50**
23018	699.80	23026	700.60
…...	……	…...	……
23094	707.40	23094	707.40
23095	**707.50**	**23095**	**707.50**
23096	707.60	23096	707.60
……	…..	……	…..
23172	715.20	23164	714.30
23173	**715.30**	**23165**	**714.40**

LTE Band 12(5MHz)		LTE Band 12(10MHz)	
Channel	Frequency (MHz)	Channel	Frequency (MHz)
23035	**701.50**	**23060**	**704.00**
23036	701.40	23061	703.90
…...	……	…...	……
23094	707.40	23094	707.40
23095	**707.50**	**23095**	**707.50**
23096	707.60	23096	707.60
……	…..	……	…..
23156	713.40	23129	710.90
23155	**713.50**	**23130**	**711.00**

LTE Band 13(5MHz)		LTE Band 13(10MHz)	
Channel	Frequency (MHz)	Channel	Frequency (MHz)
23205	**779.50**	…...	…...
23205	779.60	…...	…...
…...	……	…...	……
23229	781.90	…...	…...
23230	**782.00**	**23230**	**782.00**
23231	782.10	…...	…...
……	…..	…...	…...
23254	784.40	…...	…...
23255	**784.50**	…...	…...

1.3 Block Diagram Showing the Configuration of System Tested

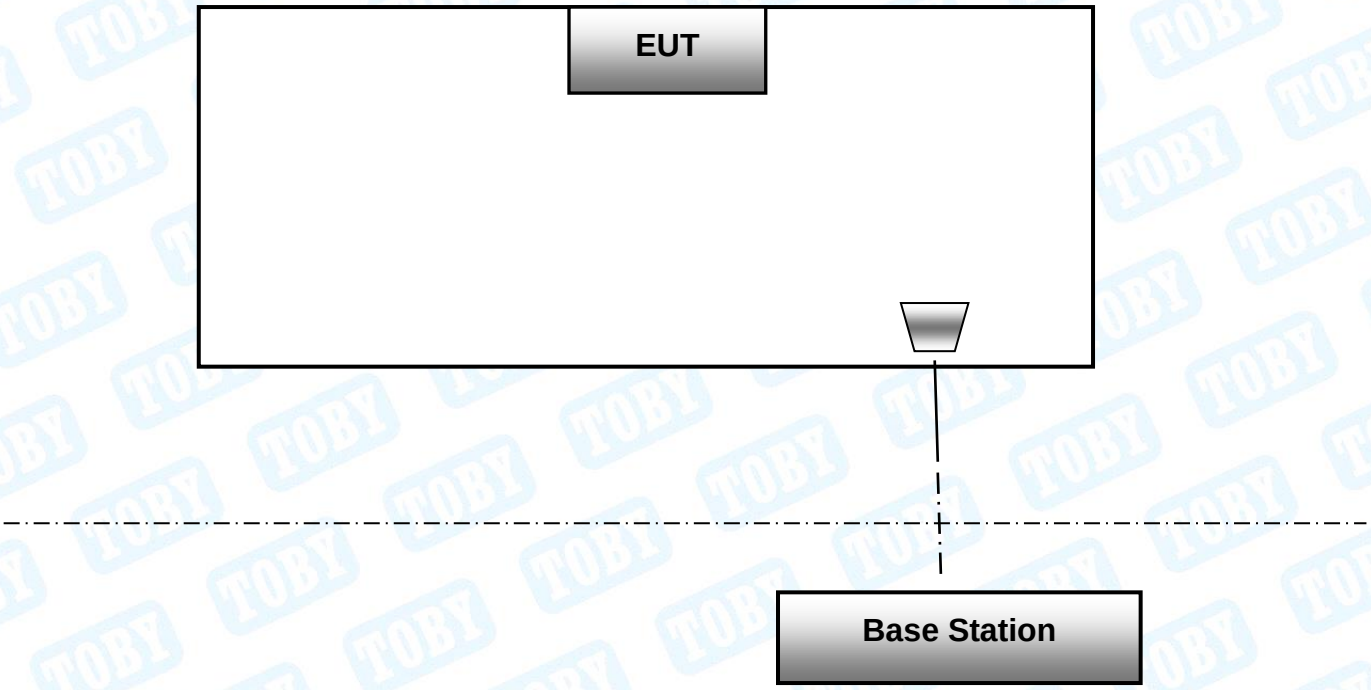

The above block diagram of setup is the normal mode. And more detail please refer to the test setup of each test item of bellow.

1.4 Description of Support Units

The EUT has been tested as an independent unit.

1.5 Description of Test Mode

Antenna port conducted and radiated test items listed below are performed according to KDB 971168 D01 v03r01 and ANSI C63.26 2015 Power Meas. License Digital Systems with maximum output power. Radiated measurements are performed by rotating the EUT in three different ortho-gonal test planes to find the maximum emission.

Remark:

1. The mark “v “ means that this configuration is chosen for testing
2. The mark “--“ means that this bandwidth is not supported.
3. The device is investigated from 30MHz to 10 times of fundamental signal for radiated

ITEMS	Band	Bandwidth (MHz)						Modulation		RB #			Test Channel		
		1.4	3	5	10	15	20	QPSK	16QAM	1	Half	Full	L	M	H
RF Output Power	2	V	V	V	V	V	V	V	V	V	V	V	V	V	V
	4	V	V	V	V	V	V	V	V	V	V	V	V	V	V
	5	V	V	V	V	--	--	V	V	V	V	V	V	V	V
	12	V	V	V	V	--	--	V	V	V	V	V	V	V	V
	13	--	--	V	V	--	--	V	V	V	V	V	V	V	V
Peak-to-Average Ratio	2	--	--	--	--	--	V	V	V	V			V	V	V
	4	--	--	--	--	--	V	V	V	V			V	V	V
	5	--	--	--	V	--	--	V	V	V			V	V	V
	12	--	--	--	V	--	--	V	V	V			V	V	V
	13	--	--	--	V	--	--	V	V	V			V	V	V
99% & -26 dB Occupied Bandwidth	2	V	V	V	V	V	V	V	V	V			V	V	V
	4	V	V	V	V	V	V	V	V	V			V	V	V
	5	V	V	V	V	--	--	V	V	V			V	V	V
	12	V	V	V	V	--	--	V	V	V			V	V	V
	13	--	--	V	V	--	--	V	V	V			V	V	V
Spurious Emissions at Antenna Terminal	2	V	V	V	V	V	V	V	--	V		V	V	V	V
	4	V	V	V	V	V	V	V	--	V		V	V	V	V
	5	V	V	V	V	--	--	V	--	V		V	V	V	V
	12	V	V	V	V	--	--	V	--	V		V	V	V	V
	13	--	--	V	V	--	--	V	--	V		V	V	V	V
Field Strength of Spurious Radiation	2	V	V	V	V	V	V	V	V	V				V	
	4	V	V	V	V	V	V	V	V	V				V	
	5	V	V	V	V	--	--	V	V	V				V	
	12	V	V	V	V	--	--	V	V	V				V	

	13	--	--	V	V	--	--	V	V	V				V	
Out of band emission, Band Edge	2	V	V	V	V	V	V	V	V	--		V	V		V
	4	V	V	V	V	V	V	V	V	--		V	V		V
	5	V	V	V	V	--	--	V	V	--		V	V		V
	12	V	V	V	V	--	--	V	V	--		V	V		V
	13	--	--	V	V	--	--	V	V	--		V	V		V
Frequency stability	2	V	V	V	V	V	V	V	V	V				V	
	4	V	V	V	V	V	V	V	V	V				V	
	5	V	V	V	V	--	--	V	V	V				V	
	12	V	V	V	V	--	--	V	V	V				V	
	13	--	--	V	V	--	--	V	V	V				V	
The EUT is LTE Category 1, 16QAM only supports 25%RB. So the 16QAM only test 25%RB.															

Note: (1) During the testing procedure, the EUT is in link mode with base station emulator at maximum power level in each test mode.

(2) The EUT is considered a portable unit; it was pre-tested on the positioned of each 3 axis, X-plane, Y-plane and Z-plane. The worst case was found positioned on Z-plane as the normal use. Therefore only the test data of this Z-plane was used for radiated emission measurement test.

1.6 Measurement Uncertainty

Test Item	Parameters	Expanded Uncertainty (U_{Lab})
RF Power, conducted	/	±0.82 dB
Radiated Emission	Level Accuracy: 9kHz to 30 MHz	±4.60 dB
Radiated Emission	Level Accuracy: 30MHz to 1000 MHz	±4.40 dB
Radiated Emission	Level Accuracy: Above 1000MHz	±4.20 dB

1.7 Test Facility

The testing report were performed by the Shenzhen Toby Technology Co., Ltd., in their facilities located at 1A/F., Bldg.6, Yusheng Industrial Zone, The National Road No.107 Xixiang Section 467, Xixiang, Bao'an, Shenzhen, Guangdong, China. At the time of testing, the following bodies accredited the Laboratory:

CNAS (L5813)

The Laboratory has been accredited by CNAS to ISO/IEC 17025: 2017 General Requirements for the Competence of Testing and Calibration Laboratories for the competence in the field of testing. And the Registration No.: CNAS L5813.

A2LA Certificate No.: 4750.01

The laboratory has been accredited by American Association for Laboratory Accreditation(A2LA) to ISO/IEC 17025：2017 General Requirements for the Competence of Testing and Calibration Laboratories for the technical competence in the field of Electrical Testing. And the A2LA Certificate No.: 4750.01.FCC Accredited Test Site Number: 854351. Designation Number: CN1223.

IC Registration No.: (11950A)

The Laboratory has been registered by Certification and Engineering Bureau of Industry Canada for radio equipment testing. The site registration: Site# 11950A. CAB identifier: CN0056.

2. Test Summary

Test Item	Section in CFR 47	Result
RF Output Power	Part 2.1046 Part 22.913(a)(2) Part 24.232(c) Part 27.50 (b)(10) Part 27.50 (d)(4) Part 27.50 (h)(2)	**PASS**
Peak-to-Average Ratio	Part 24.232(d) Part 27.50(d)(5)	**PASS**
99% & -26 dB Occupied Bandwidth	Part 2.1049 Part 22.917(a) Part 24.238(b) Part 27.53(h) Part 27.53(m)	**PASS**
Spurious Emissions at Antenna Terminal	Part 2.1051 Part 24.238(a) Part 27.53 (h) Part 27.53(m)	**PASS**
Field Strength of Spurious Radiation	Part 2.1053 Part 22.917(a) Part 24.238(a) Part 27.53 (h) Part 27.53(m)	**PASS**
Out of band emission, Band Edge	Part 24.238(a) Part 22.917(a) Part 27.53 (h) Part 27.53(m)	**PASS**
Frequency stability vs. temperature	Part 27.54 Part 24.235 Part 22.355 Part 2.1055(a)(1)(b)	**PASS**
Frequency stability vs. voltage	Part 27.54 Part 24.235 Part 22.355	**PASS**

	Part 2.1055(d)(2)	
Pass: The EUT complies with the essential requirements in the standard.		

3. Test Equipment

Conducted Emission Test					
Equipment	**Manufacturer**	**Model No.**	**Serial No.**	**Last Cal.**	**Cal. Due Date**
EMI Test Receiver	Rohde & Schwarz	ESCI	100321	Jul. 02, 2021	Jul. 01, 2022
RF Switching Unit	Compliance Direction Systems Inc	RSU-A4	34403	Jul. 02, 2021	Jul. 01, 2022
AMN	SCHWARZBECK	NNBL 8226-2	8226-2/164	Jul. 02, 2021	Jul. 01, 2022
LISN	Rohde & Schwarz	ENV216	101131	Jul. 02, 2021	Jul. 01, 2022
Radiation Emission Test					
Equipment	**Manufacturer**	**Model No.**	**Serial No.**	**Last Cal.**	**Cal. Due Date**
Spectrum Analyzer	Agilent	E4407B	MY45106456	Jul. 02, 2021	Jul. 01, 2022
EMI Test Receiver	Rohde & Schwarz	ESPI	100010/007	Jul. 02, 2021	Jul. 01, 2022
Spectrum Analyzer	Rohde & Schwarz	FSV40-N	102197	Jul. 02, 2021	Jul. 01, 2022
Bilog Antenna	ETS-LINDGREN	3142E	00117537	Feb. 28, 2022	Feb. 27, 2024
Horn Antenna	ETS-LINDGREN	3117	00143207	Feb. 28, 2022	Feb. 27, 2024
Horn Antenna	ETS-LINDGREN	BBHA 9170	BBHA9170582	Feb. 28, 2022	Feb. 27, 2024
Loop Antenna	SCHWARZBECK	FMZB 1519 B	1519B-059	Jul. 06, 2021	Jul. 05, 2022
Pre-amplifier	Sonoma	310N	185903	Feb. 24, 2022	Feb. 23, 2023
Pre-amplifier	HP	8449B	3008A00849	Feb. 24, 2022	Feb. 23, 2023
Pre-amplifier	SKET	LNPA_1840G-50	SK201904032	Feb. 24, 2022	Feb. 23, 2023
Cable	HUBER+SUHNER	100	SUCOFLEX	Feb. 24, 2022	Feb. 23, 2023
Positioning Controller	ETS-LINDGREN	2090	N/A	N/A	N/A
Antenna Conducted Emission					
Equipment	**Manufacturer**	**Model No.**	**Serial No.**	**Last Cal.**	**Cal. Due Date**
Spectrum Analyzer	Agilent	E4407B	MY45106456	Jul. 02, 2021	Jul. 01, 2022
Spectrum Analyzer	Rohde & Schwarz	FSV40-N	102197	Jul. 02, 2021	Jul. 01, 2022
MXA Signal Analyzer	Agilent	N9020A	MY49100060	Sep. 10, 2021	Sep. 09, 2022
Vector Signal Generator	Agilent	N5182A	MY50141294	Sep. 10, 2021	Sep. 09, 2022
Analog Signal Generator	Agilent	N5181A	MY50141953	Sep. 10, 2021	Sep. 09, 2022
RF Power Sensor	DARE!! Instruments	RadiPowerRPR3006W	17I00015SNO26	Sep. 10, 2021	Sep. 09, 2022

	DARE!! Instruments	RadiPowerRPR3006W	17I00015SNO29	Sep. 10, 2021	Sep. 09, 2022
	DARE!! Instruments	RadiPowerRPR3006W	17I00015SNO31	Sep. 10, 2021	Sep. 09, 2022
	DARE!! Instruments	RadiPowerRPR3006W	17I00015SNO33	Sep. 10, 2021	Sep. 09, 2022

Conducted Emission Test					
Equipment	**Manufacturer**	**Model No.**	**Serial No.**	**Last Cal.**	**Cal. Due Date**
EMI Test Receiver	Rohde & Schwarz	ESCI	100321	Jul. 02, 2021	Jul. 01, 2022
RF Switching Unit	Compliance Direction Systems Inc	RSU-A4	34403	Jul. 02, 2021	Jul. 01, 2022
AMN	SCHWARZBECK	NNBL 8226-2	8226-2/164	Jul. 02, 2021	Jul. 01, 2022
LISN	Rohde & Schwarz	ENV216	101131	Jul. 02, 2021	Jul. 01, 2022
Radiation Emission Test					
Equipment	**Manufacturer**	**Model No.**	**Serial No.**	**Last Cal.**	**Cal. Due Date**
Spectrum Analyzer	Agilent	E4407B	MY45106456	Jul. 02, 2021	Jul. 01, 2022
EMI Test Receiver	Rohde & Schwarz	ESPI	100010/007	Jul. 02, 2021	Jul. 01, 2022
Spectrum Analyzer	Rohde & Schwarz	FSV40-N	102197	Jul. 02, 2021	Jul. 01, 2022
Bilog Antenna	ETS-LINDGREN	3142E	00117537	Feb. 28, 2022	Feb. 27, 2024
Horn Antenna	ETS-LINDGREN	3117	00143207	Feb. 28, 2022	Feb. 27, 2024
Horn Antenna	ETS-LINDGREN	BBHA 9170	BBHA9170582	Feb. 28, 2022	Feb. 27, 2024
Loop Antenna	SCHWARZBECK	FMZB 1519 B	1519B-059	Jul. 06, 2021	Jul. 05, 2022
Pre-amplifier	Sonoma	310N	185903	Feb. 24, 2022	Feb. 23, 2023
Pre-amplifier	HP	8449B	3008A00849	Feb. 24, 2022	Feb. 23, 2023
Pre-amplifier	SKET	LNPA_1840G-50	SK201904032	Feb. 24, 2022	Feb. 23, 2023
Cable	HUBER+SUHNER	100	SUCOFLEX	Feb. 24, 2022	Feb. 23, 2023
Positioning Controller	ETS-LINDGREN	2090	N/A	N/A	N/A
Antenna Conducted Emission					
Equipment	**Manufacturer**	**Model No.**	**Serial No.**	**Last Cal.**	**Cal. Due Date**
Spectrum Analyzer	Agilent	E4407B	MY45106456	Jul. 02, 2021	Jul. 01, 2022
Spectrum Analyzer	Rohde & Schwarz	FSV40-N	102197	Jul. 02, 2021	Jul. 01, 2022
MXA Signal Analyzer	Agilent	N9020A	MY49100060	Sep. 09, 2022	Sep. 08, 2023
Vector Signal Generator	Agilent	N5182A	MY50141294	Sep. 09, 2022	Sep. 08, 2023
Analog Signal Generator	Agilent	N5181A	MY50141953	Sep. 09, 2022	Sep. 08, 2023
RF Power Sensor	DARE!! Instruments	RadiPowerRPR3006W	17I00015SNO26	Sep. 09, 2022	Sep. 08, 2023
	DARE!! Instruments	RadiPowerRPR3006W	17I00015SNO29	Sep. 09, 2022	Sep. 08, 2023
	DARE!! Instruments	RadiPowerRPR3006W	17I00015SNO31	Sep. 09, 2022	Sep. 08, 2023
	DARE!! Instruments	RadiPowerRPR3006W	17I00015SNO33	Sep. 09, 2022	Sep. 08, 2023

4. Conducted RF Output Power

4.1 Test Standard and Limit

4.1.1 Test Standard

FCC part 2.1046, FCC part 22.913(a)(2),
FCC part 24.232(c), FCC Part 27.50(b)&(d),
FCC Part 27.50 (h)

4.2 Test Setup

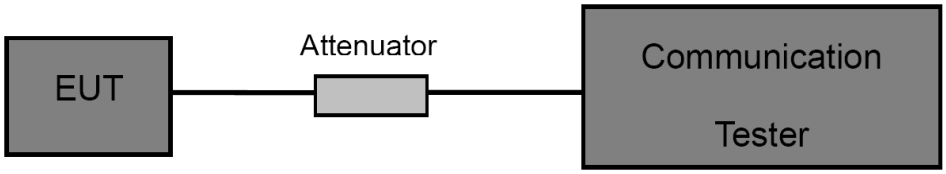

4.3 Test Procedure

(1) The EUT is coupled to the Base Station with the suitable Attenuator, the path loss is calibrated to correct the reading.
(2) A call is set up by the Base Station to the generic call set up procedure.
(3) Set EUT at maximum power level through base station by power level command.
(4) Then read record the power value from the Base Station in dBm.

4.4 EUT Operating Condition

The EUT was continuously connected with the Base station and transmitting in the max power during the test.

4.5 Deviation From Test Standard

No deviation

4.6 Test Data

Please refer to the Appendix LTE Test Data -**Radiated Power Output Data.**

5. Peak-Average Ratio

5.1 Test Standard and Limit

5.1.1 Test Standard

FCC part 24.232(d)

FCC Part 27.50(d), FCC Part 27.50 (h)

5.1.2 Test Limit

Peak-to-Average Ratio
The peak-to-average ratio (PAR) of the transmission may not exceed 13 dB.

5.2 Test Setup

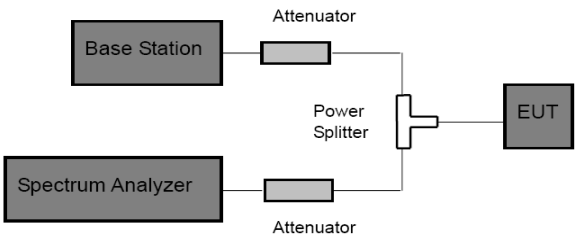

5.3 Test Procedure

According with KDB 971168

(1) The signal analyzer's CCDF measurement profile is enabled.

(2) Frequency = carrier center frequency.

(3) Measurement BW>Emission bandwidth of signal.

(4) The signal analyzer was set to collect one million samples to generate the CCDF curve.

(5) Set the EUT working in highest power level, measured and recorded the 0.1% as PAPR level.

(6) The measurement interval was set depending on the type of signal analyzed. For continuous signals (>98% duty cycle), the measurement interval was set to 1ms. For burst transmissions, the spectrum analyzer is set to use an internal "RF Burst" trigger that is synced with an incoming pulse and the measurement interval is set to less than the duration of the "on time" of one burst to ensure that energy is only captured during a time in which of the transmitter is operating at maximum power.

5.4 EUT Operating Condition

The EUT was continuously connected with the Base station and transmitting in the max power during the test.

5.5 Deviation From Test Standard

No deviation

5.6 Test Data

Please refer to the Appendix LTE Test Data - **Peak-to-Average Ratio**

6. Occupied Bandwidth

6.1 Test Standard and Limit

6.1.1 Test Standard

FCC Part 2: 2.1049, FCC Part 22.917(a),
FCC part 24.238(b)
FCC Part 27.53(h)
FCC Part 27.53(m)

6.1.2 Test Requirement

According to FCC section 2.1049, the occupied bandwidth is the frequency bandwidth such that below its lower and above its upper frequency limits, the mean powers radiated are each equal to 0.5 percent of the total mean power radiated by a given emission.

Occupied bandwidth is also known as 99% power and -26dBC occupied bandwidths.

6.2 Test Setup

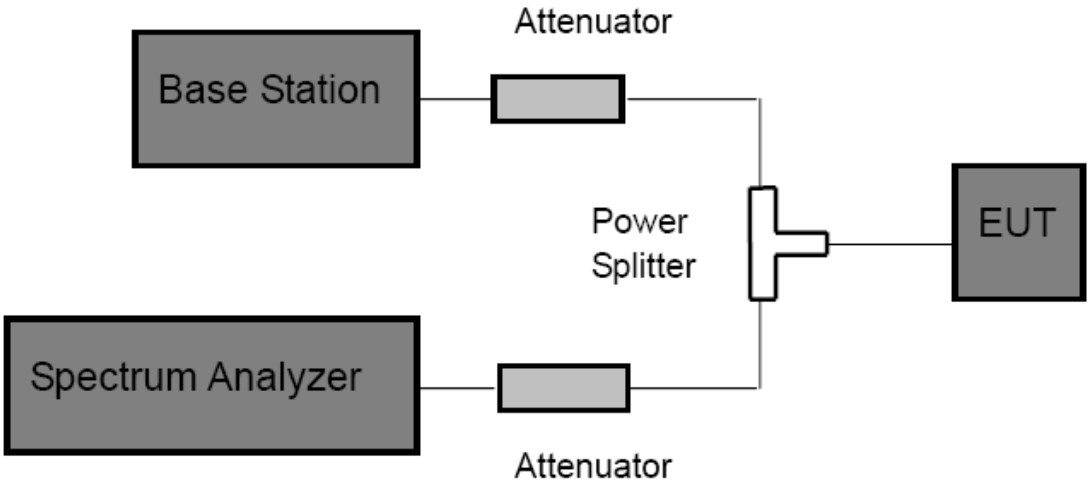

6.3 Test Procedure

(1) The EUT was directly connected to the spectrum analyzer and Base station via power splitter as show in the block diagram above.
(2) The resolution bandwidth of the Spectrum Analyzer is set to at least 1% of the occupied bandwidth. VBW= 3 times RBW.
(3) The low, middle and the high channels are selected to perform tests respectively.
(4) Set the frequency range of the Spectrum Analyzer suitably to capture the waveform; search peak; make a line whose value is 26dB lower than the peak; mark two points which the line intersected the waveform at; finally record the delta of the two points as the occupied

bandwidth and the plot.

(5) Set the Spectrum Analyzer Occupied bandwidth function to measure the 99% occupied bandwidth.

6.4 EUT Operating Condition

The EUT was continuously connected with the Base station and transmitting in the max power during the test.

6.5 Deviation From Test Standard

No deviation

6.6 Test Data

Please refer to the Appendix LTE Test Data - **26dB Bandwidth and Occupied Bandwidth**

7. Out of Band Emission at Antenna Terminals

7.1 Test Standard and Limit

7.1.1 Test Standard

FCC Part 2: 2.1051, 2.1057

FCC Part 22.917(a), FCC part 24.238(a)

FCC Part 27.53 (h),FCC Part 27.53(m)

7.1.2 Test Limit

Band 7: For mobile digital stations, the attenuation factor shall be not less than 40 + 10 log (P) dB on all frequencies between the channel edge and 5 megahertz from the channel edge, 43 + 10 log (P) dB on all frequencies between 5 megahertz and X megahertz from the channel edge, and 55 + 10 log (P) dB on all frequencies more than X megahertz from the channel edge, where X is the greater of 6 megahertz or the actual emission bandwidth as defined in paragraph (m)(6) of this section. In addition, the attenuation factor shall not be less that 43 + 10 log (P) dB on all frequencies between 2490.5 MHz and 2496 MHz and 55 + 10 log (P) dB at or below 2490.5 MHz.The power of any emission outside of the authorized operating frequency ranges must be attenuated below the transmitting power(P) by a factor of at least 43+10log(P) dB. For all power levels +30 dBm to 0 dBm, this becomes a constant specification limit of -13 dBm.

7.2 Test Setup

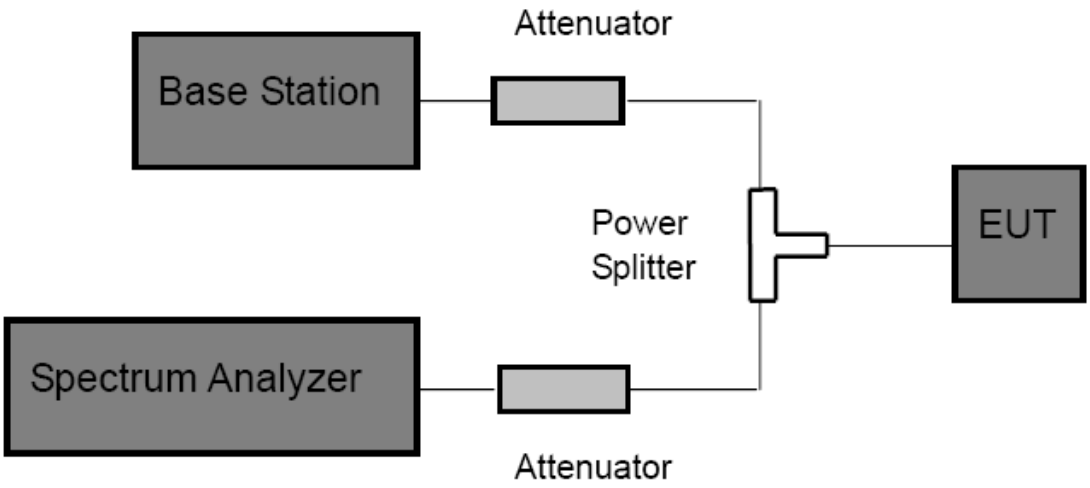

7.3 Test Procedure

1 The RF output of the transceiver was connected to a spectrum analyzer through appropriate attenuation.

2 The resolution bandwidth of the spectrum analyzer was set at 100 kHz when below 1GHz, 1MHz when above 1 GHz; sufficient scans were taken to show the out of band Emissions if any up to 10th harmonic.

3 For the out of band: Set the RBW=100 kHz, VBW=300 kHz when below 1 GHz, RBW =1 MHz, VBW=3 MHz when above 1 GHz, Start=30MHz, Stop= 10th harmonic.

4 Band Edge Requirements: In the 1 MHz bands immediately outside and adjacent to the frequency block, a resolution bandwidth of at least 1 percent of the emission bandwidth of the fundamental emission of the transmitter.

7.4 EUT Operating Condition

The EUT was continuously connected with the Base station and transmitting in the max power during the test.

7.5 Deviation From Test Standard

No deviation

7.6 Test Data

Please refer to the Appendix LTE Test Data - **Conducted Spurious Emission**

8. Band Edge Test

8.1 Test Standard and Limit

8.1.1 Test Standard

FCC Part 2: 2.1051, 2.1057

FCC Part 22.917(a), FCC part 24.238(a)

FCC Part 27.53 (h),FCC Part 27.53(m)

8.1.2 Test Limit

Band 7: For mobile digital stations, the attenuation factor shall be not less than 40 + 10 log (P) dB on all frequencies between the channel edge and 5 megahertz from the channel edge, 43 + 10 log (P) dB on all frequencies between 5 megahertz and X megahertz from the channel edge, and 55 + 10 log (P) dB on all frequencies more than X megahertz from the channel edge, where X is the greater of 6 megahertz or the actual emission bandwidth as defined in paragraph (m)(6) of this section. In addition, the attenuation factor shall not be less that 43 + 10 log (P) dB on all frequencies between 2490.5 MHz and 2496 MHz and 55 + 10 log (P) dB at or below 2490.5 MHz.The power of any emission outside of the authorized operating frequency ranges must be attenuated below the transmitting power(P) by a factor of at least 43+10log(P) dB. For all power levels +30 dBm to 0 dBm, this becomes a constant specification limit of -13 dBm.

8.2 Test Setup

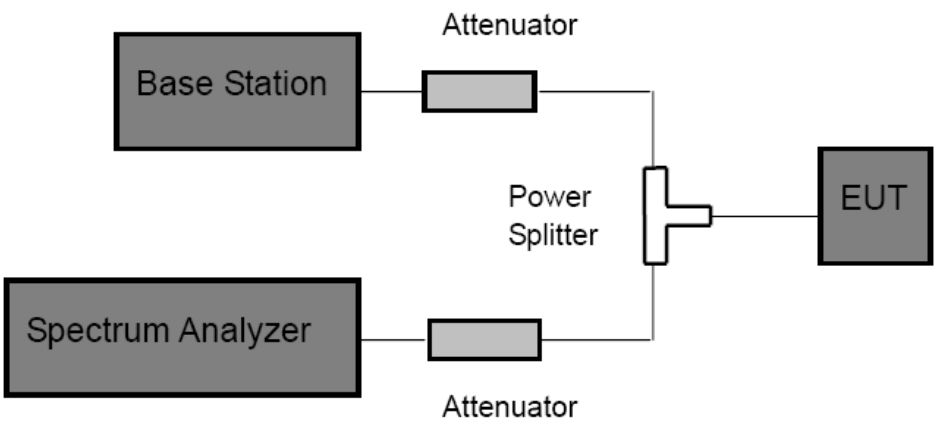

8.3 Test Procedure

(1) The EUT was directly connected to the spectrum analyzer and Base station via power splitter as show in the block diagram above.

(2) Band Edge Requirements: In the 1 MHz bands immediately outside and adjacent to the

frequency block, a resolution bandwidth of at least 1 percent of the emission bandwidth of the fundamental emission of the transmitter.

8.4 EUT Operating Condition

The EUT was continuously connected with the Base station and transmitting in the max power during the test.

8.5 Deviation From Test Standard

No deviation

8.6 Test Data

Please refer to the Appendix LTE Test Data - **Band Edge**

9. Radiated Output Power

9.1 Test Standard and Limit

9.1.1 Test Standard

FCC Part 2.1046, FCC Part 22.913(a)(2),
FCC part 24.232(c)
FCC part 27.50(c), FCC part 27.50(d)

9.1.2 Test Limit

E.I.R.P	E.I.R.P	E.R.P	E.I.R.P
LTE Band 2	**LTE Band 4**	**LTE Band 5**	**LTE Band 7**
2W(33 dBm)	1W(30 dBm)	7W(38.45dBm)	2W(33 dBm)
E.R.P	**E.R.P**	**E.I.R.P**	**E.R.P**
LTE Band 12	**LTE Band 17**	**LTE Band 25**	**LTE Band 26**
3W(34.77dBm)	3W(34.77dBm)	2W(33 dBm)	7W(38.45dBm)

9.2 Test Setup

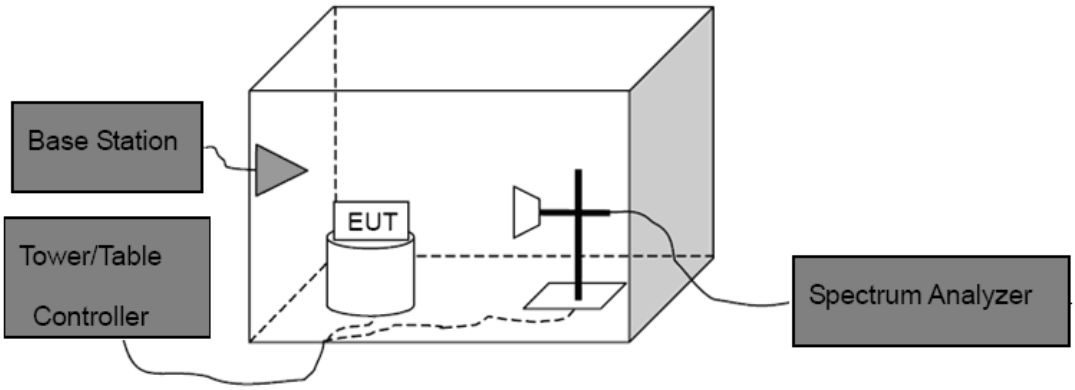

Above 1G

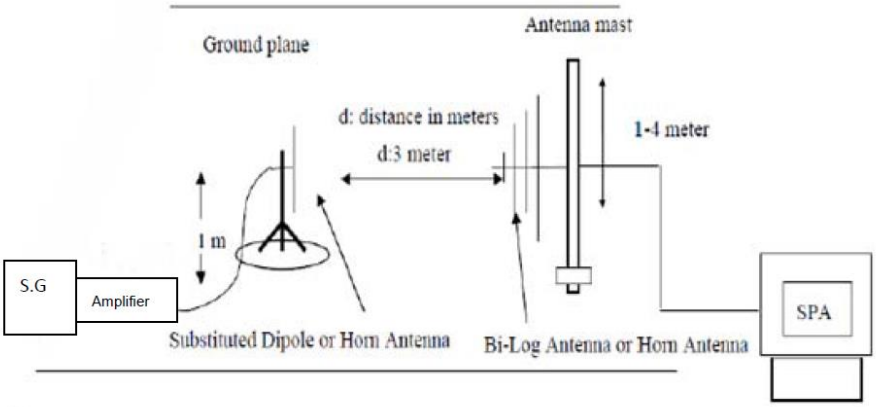

Substituted Method

9.3 Test Procedure

(1) The EUT was placed on an non-conductive rotating platform with 0.8 meter height in an anechoic chamber. The radiated emission at the fundamental frequency was measured at 3 m with a test antenna and a spectrum analyzer with RBW=3 MHz, VBW=3 MHz and peak detector settings.

(2) During the measurement, the EUT was enforced in maximum power and linked with the Base Station. The highest was recorded from analyzer power level (LVT) from the 360 degrees rotation of the turntable and the test antenna raised and lowered over a range from 1 to 4 meters in both horizontally and vertically polarized orientations.

(3) Effective Isotropic Radiated Power (EIRP) was measured by substitution method according to C63.26. The EUT was replaced by dipole antenna (for frequency below 1 GHz) or Horn antenna (for frequency above 1 GHz) at same location with same polarize of receiver antenna and then a known power of each measure frequency from S.G. was applied into the dipole antenna or Horn antenna through a TX cable, and then recorded the maximum Analyzer reading through raised and lowered the test antenna.

Note: In test, the S.G Connect the Pre-amplifier(Sonoma 310N Pre-amplifier for frequency below 1 GHz, HP 8449B Pre-amplifier for frequency above 1 GHz)

Then the EUT's EIRP and ERP was calculated with the correction factor:

ERP=S.G.Level +Antenna Gain Cord.(dB)-Cable Loss(dB)

EIRP=S.G.Level+Antenna Gain Cord.(dBi)-Cable Loss(dB)

9.4 EUT Operating Condition

The EUT was continuously connected with the Base station and transmitting in the max power during the test.

9.5 Deviation From Test Standard

No deviation

9.6 Test Data

Please refer to the Appendix LTE Test Data - **Radiated Output Power**

10. Radiated Out Band of Emissions

10.1 Test Standard and Limit

10.1.1 Test Standard

FCC Part 2: 2.1053, FCC Part 22.917(a)

FCC part 24.238(a)

FCC Part 27.53 (h),FCC Part 27.53(m)

10.1.2 Test Limit

The power of any emission outside of the authorized operating frequency ranges must be attenuated below the transmitting power(P) by a factor of at least 43+10log(P) dB. For all power levels +30 dBm to 0 dBm, this becomes a constant specification limit of -13 dBm.

10.2 Test Setup

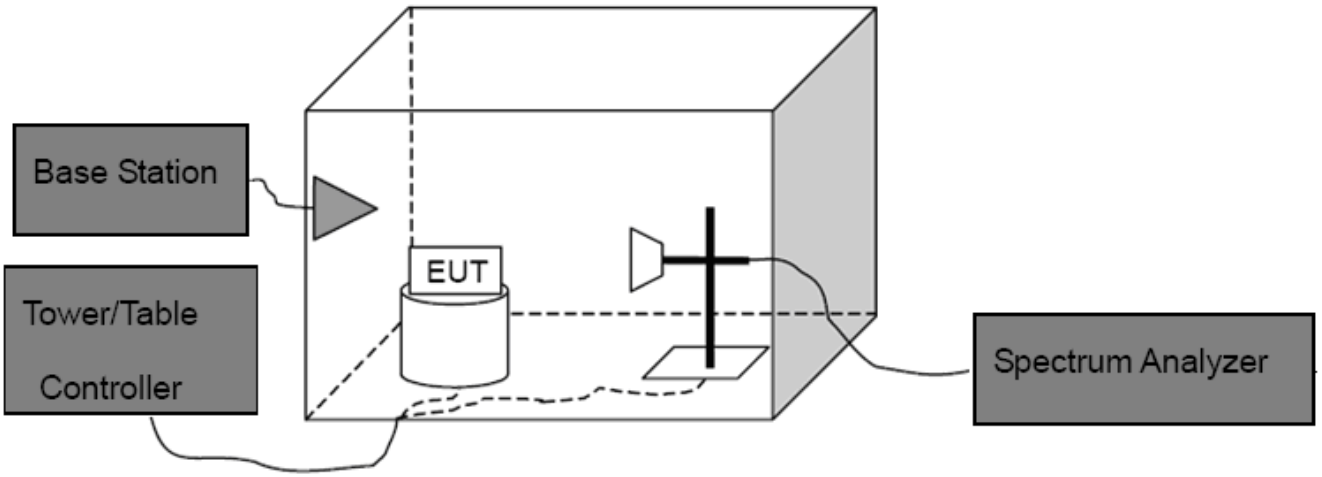

10.3 Test Procedure

(1) The test system setup as show in the block diagram above.

(2) The EUT was placed on an non-conductive rotating platform in an anechoic chamber. The radiated spurious emissions from 30MHz to 10th harmonious of fundamental frequency were measured at 3 m with a test antenna and a spectrum analyzer with RBW=1 MHz, VBW=1 MHz, peak detector settings.

(3) During the measurement, the EUT was enforced in maximum power and linked with a base station. All the spurious emissions at 3m were measured by rotation of the turntable and the test antenna raised and lowered over a range from 1 to 4 meters in both horizontally and vertically polarized orientations.

(4) When found the maximum level of emissions from the EUT. Remove the EUT and replace it with substitution antenna. A signal generator was connected to the substitution antenna by a

non-radiating cable. The absolute levels of the spurious emissions were measured by the substitution.

Spurious emissions in dB=10 log(TX power in Watts/0.001)-the absolute level

Spurious attenuation limit in dB=43+10 log(power out in Watts)

10.4 EUT Operating Condition

The EUT was continuously connected with the Base station and transmitting in the max power during the test.

10.5 Deviation From Test Standard

No deviation

10.6 Test Data

Please refer to the Attachment A.

Measurement Data (worst case)

11. Frequency Stability

11.1 Test Standard and Limit

11.1.1 Test Standard

FCC Part 2.1055(a)(1)(b) FCC Part 22.355

FCC Part 24.235, Part 27.54

11.1.2 Limit

Limit
±2.5ppm

11.2 Test Setup

For Temperature Test:

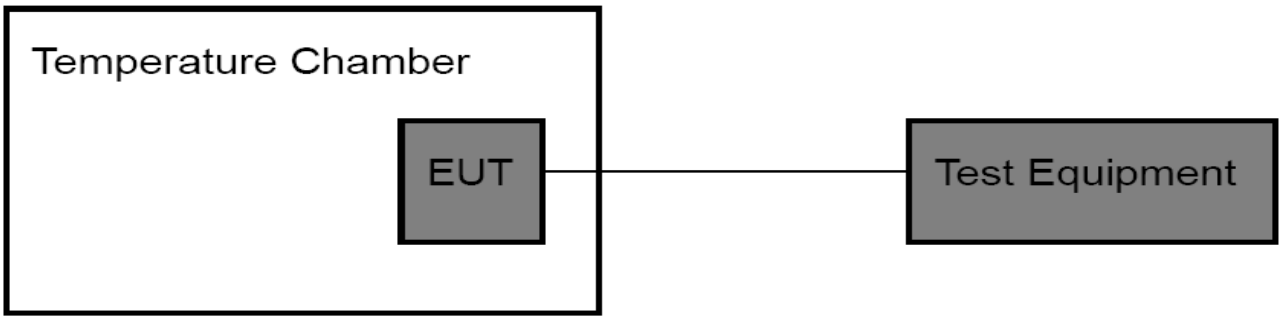

For Voltage Test:

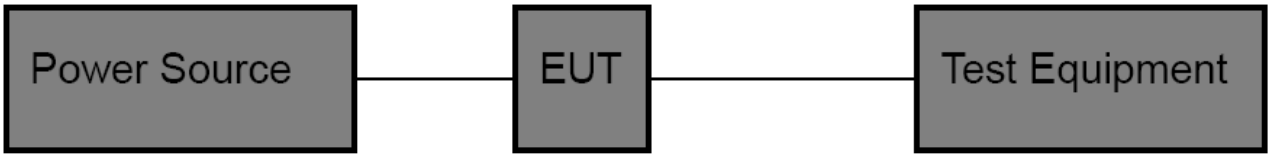

11.3 Test Procedure

Test Procedures for Temperature Variation:

(1) The EUT was set up in the thermal chamber and connected with the base station.

(2) With power off, the temperature was decreased to -30℃ and the EUT was stabilized for three hours. Power was applied and the maximum change in frequency was recorded within one minute.

(3) With power off, the temperature was raised in 10℃ set up to 50℃ and the EUT was stabilized for three hours. Power was applied and the maximum change in frequency was recorded within one minute.

(4) If the EUT cannot be turned on at -30℃, the testing lowest temperature will be raised in 10℃ step until the EUT can be turned on.

Test Procedures for Voltage Variation:

(1) The EUT was placed in a temperature chamber at 25±5℃ and connected with the base station.

(2) Reduce the input voltage to specify extreme voltage variation (+/- 15%) and endpoint, record the maximum frequency change.

(3) The variation in frequency was measured for the worst case.

11.4 EUT Operating Condition

The Equipment Under Test was set to Communication with the Base Station.

11.5 Deviation From Test Standard

No deviation

11.6 Test Data

Please refer to the Appendix LTE Test Data - **Frequency Stability**

ATTACHMENT A--RADIATED OUTPUT POWER

Radiated Power (EIRP) for LTE Band 2 / 1.4M									
Modulation	RB		Channel	Antenna	SG Level	Antenna	Cable Loss	EIRP	EIRP
	Size	offset		(H&V)	(dBm)	Factor	(dB)	(dBm)	(W)
QPSK	1	0	Lowest	H	16.42	5.01	2.59	18.84	0.0766
				V	17.92	5.01	2.59	20.34	0.1082
	1	0	Middle	H	19.83	4.82	2.59	22.06	0.1607
				V	15.11	4.82	2.59	17.34	0.0542
	1	0	Highest	H	17.98	4.45	2.59	19.84	0.0964
				V	18.98	4.45	2.59	20.84	0.1213
16QAM	1	0	Lowest	H	21.79	5.01	2.59	24.21	0.2637
				V	16.57	5.01	2.59	18.99	0.0792
	1	0	Middle	H	18.92	4.82	2.59	21.15	0.1304
				V	16.34	4.82	2.59	18.57	0.0719
	1	0	Highest	H	22.13	4.45	2.59	23.99	0.2508
				V	19.30	4.45	2.59	21.16	0.1307
Limit								**33**	**2**

Radiated Power (EIRP) for LTE Band 2 / 3M									
Modulation	RB		Channel	Antenna	SG Level	Antenna	Cable Loss	EIRP	EIRP
	Size	offset		(H&V)	(dBm)	Factor	(dB)	(dBm)	(W)
QPSK	1	0	Lowest	H	20.24	5.01	2.59	22.66	0.1846
				V	15.87	5.01	2.59	18.29	0.0675
	1	0	Middle	H	19.95	4.82	2.59	22.18	0.1651
				V	16.47	4.82	2.59	18.70	0.0742
	1	0	Highest	H	22.59	4.45	2.59	24.45	0.2785
				V	15.59	4.45	2.59	17.45	0.0556
16QAM	1	0	Lowest	H	17.13	5.01	2.59	19.55	0.0902
				V	15.21	5.01	2.59	17.63	0.0580
	1	0	Middle	H	21.75	4.82	2.59	23.98	0.2500
				V	18.77	4.82	2.59	21.00	0.1260
	1	0	Highest	H	21.27	4.45	2.59	23.13	0.2054
				V	17.74	4.45	2.59	19.60	0.0911
Limit								**33**	**2**

Radiated Power (EIRP) for LTE Band 2 / 5M									
Modulation	RB		Channel	Antenna	SG Level	Antenna	Cable Loss	EIRP	EIRP
	Size	offset		(H&V)	(dBm)	Factor	(dB)	(dBm)	(W)
QPSK	1	0	Lowest	H	20.88	5.01	2.59	23.30	0.2138
				V	19.14	5.01	2.59	21.56	0.1434
	1	0	Middle	H	17.39	4.82	2.59	19.62	0.0916
				V	14.99	4.82	2.59	17.22	0.0527
	1	0	Highest	H	18.05	4.45	2.59	19.91	0.0979
				V	18.42	4.45	2.59	20.28	0.1065
16QAM	1	0	Lowest	H	21.93	5.01	2.59	24.35	0.2723
				V	16.21	5.01	2.59	18.63	0.0730
	1	0	Middle	H	21.89	4.82	2.59	24.12	0.2585
				V	18.32	4.82	2.59	20.55	0.1134
	1	0	Highest	H	17.61	4.45	2.59	19.47	0.0884
				V	16.36	4.45	2.59	18.22	0.0664
Limit								**33**	**2**

Radiated Power (EIRP) for LTE Band 2 / 10M									
Modulation	RB		Channel	Antenna	SG Level	Antenna	Cable Loss	EIRP	EIRP
	Size	offset		(H&V)	(dBm)	Factor	(dB)	(dBm)	(W)
QPSK	1	0	Lowest	H	21.55	5.01	2.59	23.97	0.2493
				V	17.12	5.01	2.59	19.54	0.0899
	1	0	Middle	H	17.25	4.82	2.59	19.48	0.0888
				V	13.74	4.82	2.59	15.97	0.0395
	1	0	Highest	H	22.34	4.45	2.59	24.20	0.2629
				V	13.93	4.45	2.59	15.79	0.0379
16QAM	1	0	Lowest	H	20.38	5.01	2.59	22.80	0.1907
				V	14.65	5.01	2.59	17.07	0.0509
	1	0	Middle	H	19.14	4.82	2.59	21.37	0.1370
				V	18.99	4.82	2.59	21.22	0.1325
	1	0	Highest	H	18.50	4.45	2.59	20.36	0.1086
				V	16.09	4.45	2.59	17.95	0.0624
Limit								**33**	**2**

Radiated Power (EIRP) for LTE Band 2 / 15M									
Modulation	RB		Channel	Antenna	SG Level	Antenna	Cable Loss	EIRP	EIRP
	Size	offset		(H&V)	(dBm)	Factor	(dB)	(dBm)	(W)
QPSK	1	0	Lowest	H	20.36	5.01	2.59	22.78	0.1896
				V	16.51	5.01	2.59	18.93	0.0782
	1	0	Middle	H	19.60	4.82	2.59	21.83	0.1523
				V	14.18	4.82	2.59	16.41	0.0438
	1	0	Highest	H	22.18	4.45	2.59	24.04	0.2534
				V	14.18	4.45	2.59	16.04	0.0402
16QAM	1	0	Lowest	H	19.70	5.01	2.59	22.12	0.1629
				V	16.52	5.01	2.59	18.94	0.0784
	1	0	Middle	H	17.02	4.82	2.59	19.25	0.0841
				V	17.88	4.82	2.59	20.11	0.1026
	1	0	Highest	H	17.84	4.45	2.59	19.70	0.0933
				V	19.32	4.45	2.59	21.18	0.1313
Limit								**33**	**2**

Radiated Power (EIRP) for LTE Band 2 / 20M									
Modulation	RB		Channel	Antenna	SG Level	Antenna	Cable Loss	EIRP	EIRP
	Size	offset		(H&V)	(dBm)	Factor	(dB)	(dBm)	(W)
QPSK	1	0	Lowest	H	19.94	5.01	2.59	22.36	0.1722
				V	18.31	5.01	2.59	20.73	0.1183
	1	0	Middle	H	17.73	4.82	2.59	19.96	0.0991
				V	17.00	4.82	2.59	19.23	0.0838
	1	0	Highest	H	17.91	4.45	2.59	19.77	0.0947
				V	14.59	4.45	2.59	16.45	0.0441
16QAM	1	0	Lowest	H	16.67	5.01	2.59	19.09	0.0811
				V	13.59	5.01	2.59	16.01	0.0399
	1	0	Middle	H	20.10	4.82	2.59	22.33	0.1710
				V	17.22	4.82	2.59	19.45	0.0880
	1	0	Highest	H	22.93	4.45	2.59	24.79	0.3011
				V	16.16	4.45	2.59	18.02	0.0634
Limit								**33**	**2**

Radiated Power (EIRP) for LTE Band 4 / 1.4M									
Modulation	RB		Channel	Antenna	SG Level	Antenna	Cable Loss	EIRP	EIRP
	Size	offset		(H&V)	(dBm)	Factor	(dB)	(dBm)	(W)
QPSK	1	0	Lowest	H	16.89	5.01	2.59	19.31	0.0853
				V	13.96	5.01	2.59	16.38	0.0434
	1	0	Middle	H	18.11	4.82	2.59	20.34	0.1080
				V	16.49	4.82	2.59	18.72	0.0745
	1	0	Highest	H	17.83	4.45	2.59	19.69	0.0931
				V	13.89	4.45	2.59	15.75	0.0375
16QAM	1	0	Lowest	H	22.32	5.01	2.59	24.74	0.2978
				V	19.21	5.01	2.59	21.63	0.1454
	1	0	Middle	H	21.62	4.82	2.59	23.85	0.2426
				V	15.86	4.82	2.59	18.09	0.0644
	1	0	Highest	H	17.24	4.45	2.59	19.10	0.0812
				V	17.10	4.45	2.59	18.96	0.0787
Limit								**30**	**1**

Radiated Power (EIRP) for LTE Band 4 / 3M									
Modulation	RB		Channel	Antenna	SG Level	Antenna	Cable Loss	EIRP	EIRP
	Size	offset		(H&V)	(dBm)	Factor	(dB)	(dBm)	(W)
QPSK	1	0	Lowest	H	16.94	5.01	2.59	19.36	0.0862
				V	17.51	5.01	2.59	19.93	0.0985
	1	0	Middle	H	20.12	4.82	2.59	22.35	0.1717
				V	19.49	4.82	2.59	21.72	0.1486
	1	0	Highest	H	22.40	4.45	2.59	24.26	0.2666
				V	17.38	4.45	2.59	19.24	0.0840
16QAM	1	0	Lowest	H	18.10	5.01	2.59	20.52	0.1128
				V	19.10	5.01	2.59	21.52	0.1420
	1	0	Middle	H	16.66	4.82	2.59	18.89	0.0774
				V	15.18	4.82	2.59	17.41	0.0551
	1	0	Highest	H	19.82	4.45	2.59	21.68	0.1473
				V	16.90	4.45	2.59	18.76	0.0751
Limit								**30**	**1**

Radiated Power (EIRP) for LTE Band 4 / 5M									
Modulation	RB		Channel	Antenna (H&V)	SG Level (dBm)	Antenna Factor (dB)	Cable Loss (dB)	EIRP (dBm)	EIRP (W)
	Size	offset							
QPSK	1	0	Lowest	H	18.10	5.01	2.59	20.52	0.1128
				V	19.10	5.01	2.59	21.52	0.1420
	1	0	Middle	H	16.66	4.82	2.59	18.89	0.0774
				V	15.18	4.82	2.59	17.41	0.0551
	1	0	Highest	H	19.82	4.45	2.59	21.68	0.1473
				V	16.90	4.45	2.59	18.76	0.0751
16QAM	1	0	Lowest	H	18.89	5.01	2.59	21.31	0.1351
				V	16.46	5.01	2.59	18.88	0.0772
	1	0	Middle	H	17.13	4.82	2.59	19.36	0.0862
				V	19.57	4.82	2.59	21.80	0.1515
	1	0	Highest	H	18.14	4.45	2.59	20.00	0.0999
				V	18.73	4.45	2.59	20.59	0.1145
Limit								**30**	**1**

Radiated Power (EIRP) for LTE Band 4 / 10M									
Modulation	RB		Channel	Antenna (H&V)	SG Level (dBm)	Antenna Factor	Cable Loss (dB)	EIRP (dBm)	EIRP (W)
	Size	offset							
QPSK	1	0	Lowest	H	20.35	5.01	2.59	22.77	0.1892
				V	19.12	5.01	2.59	21.54	0.1426
	1	0	Middle	H	21.58	4.82	2.59	23.81	0.2407
				V	18.31	4.82	2.59	20.54	0.1132
	1	0	Highest	H	18.89	4.45	2.59	20.75	0.1188
				V	14.23	4.45	2.59	16.09	0.0406
16QAM	1	0	Lowest	H	20.60	5.01	2.59	23.02	0.2007
				V	16.85	5.01	2.59	19.27	0.0844
	1	0	Middle	H	21.48	4.82	2.59	23.71	0.2352
				V	13.86	4.82	2.59	16.09	0.0407
	1	0	Highest	H	22.70	4.45	2.59	24.56	0.2859
				V	19.37	4.45	2.59	21.23	0.1326
Limit								**30**	**1**

Radiated Power (EIRP) for LTE Band 4 / 15M									
Modulation	RB		Channel	Antenna	SG Level	Antenna	Cable Loss	EIRP	EIRP
	Size	offset		(H&V)	(dBm)	Factor	(dB)	(dBm)	(W)
QPSK	1	0	Lowest	H	19.34	5.01	2.59	21.76	0.1499
				V	18.03	5.01	2.59	20.45	0.1110
	1	0	Middle	H	19.31	4.82	2.59	21.54	0.1427
				V	16.69	4.82	2.59	18.92	0.0779
	1	0	Highest	H	17.10	4.45	2.59	18.96	0.0787
				V	14.72	4.45	2.59	16.58	0.0455
16QAM	1	0	Lowest	H	19.87	5.01	2.59	22.29	0.1693
				V	14.08	5.01	2.59	16.50	0.0447
	1	0	Middle	H	18.48	4.82	2.59	20.71	0.1176
				V	19.21	4.82	2.59	21.44	0.1394
	1	0	Highest	H	19.29	4.45	2.59	21.15	0.1304
				V	16.40	4.45	2.59	18.26	0.0670
Limit								**30**	**1**

Radiated Power (EIRP) for LTE Band 4 / 20M									
Modulation	RB		Channel	Antenna	SG Level	Antenna	Cable Loss	EIRP	EIRP
	Size	offset		(H&V)	(dBm)	Factor	(dB)	(dBm)	(W)
QPSK	1	0	Lowest	H	17.74	5.01	2.59	20.16	0.1039
				V	15.89	5.01	2.59	18.31	0.0678
	1	0	Middle	H	21.43	4.82	2.59	23.66	0.2322
				V	17.23	4.82	2.59	19.46	0.0884
	1	0	Highest	H	21.24	4.45	2.59	23.10	0.2040
				V	13.98	4.45	2.59	15.84	0.0384
16QAM	1	0	Lowest	H	19.51	5.01	2.59	21.93	0.1561
				V	17.61	5.01	2.59	20.03	0.1006
	1	0	Middle	H	18.13	4.82	2.59	20.36	0.1086
				V	18.62	4.82	2.59	20.85	0.1215
	1	0	Highest	H	21.08	4.45	2.59	22.94	0.1969
				V	19.11	4.45	2.59	20.97	0.1249
Limit								**30**	**1**

Radiated Power (ERP) for LTE Band 5 / 1.4M									
Modulation	RB		Channel	Antenna	SG Level	Antenna	Cable Loss	ERP	ERP
	Size	offset		(H&V)	(dBm)	Factor	(dB)	(dBm)	(W)
QPSK	1	0	Lowest	H	19.60	5.01	2.59	22.02	0.1593
				V	14.55	5.01	2.59	16.97	0.0498
	1	0	Middle	H	19.49	4.82	2.59	21.72	0.1487
				V	18.12	4.82	2.59	20.35	0.1084
	1	0	Highest	H	21.94	4.45	2.59	23.80	0.2400
				V	15.47	4.45	2.59	17.33	0.0540
16QAM	1	0	Lowest	H	18.13	5.01	2.59	20.55	0.1134
				V	18.36	5.01	2.59	20.78	0.1196
	1	0	Middle	H	18.85	4.82	2.59	21.08	0.1283
				V	15.43	4.82	2.59	17.66	0.0584
	1	0	Highest	H	22.51	4.45	2.59	24.37	0.2736
				V	18.24	4.45	2.59	20.10	0.1024
Limit								**38.45**	**7**

Radiated Power (ERP) for LTE Band 5 / 3M									
Modulation	RB		Channel	Antenna	SG Level	Antenna	Cable Loss	ERP	ERP
	Size	offset		(H&V)	(dBm)	Factor	(dB)	(dBm)	(W)
QPSK	1	0	Lowest	H	21.00	5.01	2.59	23.42	0.2196
				V	16.23	5.01	2.59	18.65	0.0733
	1	0	Middle	H	22.27	4.82	2.59	24.50	0.2821
				V	17.77	4.82	2.59	20.00	0.1000
	1	0	Highest	H	17.78	4.45	2.59	19.64	0.0919
				V	17.22	4.45	2.59	19.08	0.0810
16QAM	1	0	Lowest	H	21.08	5.01	2.59	23.50	0.2237
				V	17.64	5.01	2.59	20.06	0.1013
	1	0	Middle	H	17.59	4.82	2.59	19.82	0.0960
				V	14.81	4.82	2.59	17.04	0.0506
	1	0	Highest	H	18.80	4.45	2.59	20.66	0.1164
				V	18.64	4.45	2.59	20.50	0.1122
Limit								**38.45**	**7**

Radiated Power (ERP) for LTE Band 5 / 5M									
Modulation	RB		Channel	Antenna	SG Level	Antenna	Cable Loss	ERP	ERP
	Size	offset		(H&V)	(dBm)	Factor	(dB)	(dBm)	(W)
QPSK	1	0	Lowest	H	19.61	5.01	2.59	22.03	0.1597
				V	13.95	5.01	2.59	16.37	0.0434
	1	0	Middle	H	22.18	4.82	2.59	24.41	0.2761
				V	16.65	4.82	2.59	18.88	0.0772
	1	0	Highest	H	18.00	4.45	2.59	19.86	0.0969
				V	18.46	4.45	2.59	20.32	0.1075
16QAM	1	0	Lowest	H	16.87	5.01	2.59	19.29	0.0848
				V	14.25	5.01	2.59	16.67	0.0464
	1	0	Middle	H	21.43	4.82	2.59	23.66	0.2323
				V	18.19	4.82	2.59	20.42	0.1102
	1	0	Highest	H	19.56	4.45	2.59	21.42	0.1385
				V	16.92	4.45	2.59	18.78	0.0755
Limit								**38.45**	**7**

Radiated Power (ERP) for LTE Band 5 / 10M									
Modulation	RB		Channel	Antenna	SG Level	Antenna	Cable Loss	ERP	ERP
	Size	offset		(H&V)	(dBm)	Factor	(dB)	(dBm)	(W)
QPSK	1	0	Lowest	H	22.17	5.01	2.59	24.59	0.2878
				V	18.33	5.01	2.59	20.75	0.1188
	1	0	Middle	H	22.20	4.82	2.59	24.43	0.2771
				V	18.57	4.82	2.59	20.80	0.1202
	1	0	Highest	H	19.65	4.45	2.59	21.51	0.1417
				V	18.03	4.45	2.59	19.89	0.0974
16QAM	1	0	Lowest	H	22.02	5.01	2.59	24.44	0.2782
				V	15.61	5.01	2.59	18.03	0.0636
	1	0	Middle	H	22.16	4.82	2.59	24.39	0.2748
				V	13.85	4.82	2.59	16.08	0.0406
	1	0	Highest	H	20.47	4.45	2.59	22.33	0.1710
				V	19.56	4.45	2.59	21.42	0.1387
Limit								**38.45**	**7**

Radiated Power (EIRP) for LTE Band 12 / 1.4M									
Modulation	RB		Channel	Antenna	SG Level	Antenna	Cable Loss	EIRP	EIRP
	Size	offset		(H&V)	(dBm)	Factor	(dB)	(dBm)	(W)
QPSK	1	0	Lowest	H	17.29	5.01	2.59	19.71	0.0936
				V	17.95	5.01	2.59	20.37	0.1090
	1	0	Middle	H	18.68	4.82	2.59	20.91	0.1233
				V	15.98	4.82	2.59	18.21	0.0662
	1	0	Highest	H	19.76	4.45	2.59	21.62	0.1451
				V	17.30	4.45	2.59	19.16	0.0825
16QAM	1	0	Lowest	H	17.80	5.01	2.59	20.22	0.1052
				V	13.54	5.01	2.59	15.96	0.0394
	1	0	Middle	H	20.89	4.82	2.59	23.12	0.2052
				V	13.89	4.82	2.59	16.12	0.0409
	1	0	Highest	H	17.94	4.45	2.59	19.80	0.0955
				V	16.90	4.45	2.59	18.76	0.0752
Limit								**34.77**	**3**

Radiated Power (EIRP) for LTE Band 12 / 3M									
Modulation	RB		Channel	Antenna	SG Level	Antenna	Cable Loss	EIRP	EIRP
	Size	offset		(H&V)	(dBm)	Factor	(dB)	(dBm)	(W)
QPSK	1	0	Lowest	H	21.62	5.01	2.59	24.04	0.2535
				V	18.82	5.01	2.59	21.24	0.1331
	1	0	Middle	H	19.49	4.82	2.59	21.72	0.1484
				V	14.38	4.82	2.59	16.61	0.0458
	1	0	Highest	H	17.30	4.45	2.59	19.16	0.0825
				V	16.70	4.45	2.59	18.56	0.0718
16QAM	1	0	Lowest	H	18.83	5.01	2.59	21.25	0.1334
				V	15.63	5.01	2.59	18.05	0.0638
	1	0	Middle	H	16.74	4.82	2.59	18.97	0.0789
				V	19.41	4.82	2.59	21.64	0.1460
	1	0	Highest	H	17.34	4.45	2.59	19.20	0.0832
				V	15.08	4.45	2.59	16.94	0.0494
Limit								**34.77**	**3**

Radiated Power (EIRP) for LTE Band 12 / 5M									
Modulation	RB		Channel	Antenna	SG Level	Antenna	Cable Loss	EIRP	EIRP
	Size	offset		(H&V)	(dBm)	Factor	(dB)	(dBm)	(W)
QPSK	1	0	Lowest	H	19.92	5.01	2.59	22.34	0.1715
				V	14.70	5.01	2.59	17.12	0.0515
	1	0	Middle	H	22.16	4.82	2.59	24.39	0.2745
				V	18.61	4.82	2.59	20.84	0.1212
	1	0	Highest	H	21.22	4.45	2.59	23.08	0.2035
				V	18.61	4.45	2.59	20.47	0.1113
16QAM	1	0	Lowest	H	20.59	5.01	2.59	23.01	0.2001
				V	14.00	5.01	2.59	16.42	0.0439
	1	0	Middle	H	17.21	4.82	2.59	19.44	0.0880
				V	15.19	4.82	2.59	17.42	0.0552
	1	0	Highest	H	19.59	4.45	2.59	21.45	0.1396
				V	14.90	4.45	2.59	16.76	0.0475
Limit								**34.77**	**3**

Radiated Power (EIRP) for LTE Band 12 / 10M									
Modulation	RB		Channel	Antenna	SG Level	Antenna	Cable Loss	EIRP	EIRP
	Size	offset		(H&V)	(dBm)	Factor	(dB)	(dBm)	(W)
QPSK	1	0	Lowest	H	18.67	5.01	2.59	21.09	0.1285
				V	16.29	5.01	2.59	18.71	0.0743
	1	0	Middle	H	22.03	4.82	2.59	24.26	0.2666
				V	17.65	4.82	2.59	19.88	0.0973
	1	0	Highest	H	20.68	4.45	2.59	22.54	0.1795
				V	15.46	4.45	2.59	17.32	0.0540
16QAM	1	0	Lowest	H	20.81	5.01	2.59	23.23	0.2105
				V	13.75	5.01	2.59	16.17	0.0414
	1	0	Middle	H	18.07	4.82	2.59	20.30	0.1070
				V	15.89	4.82	2.59	18.12	0.0649
	1	0	Highest	H	22.89	4.45	2.59	24.75	0.2984
				V	14.87	4.45	2.59	16.73	0.0471
Limit								**34.77**	**3**

Radiated Power (ERP) for LTE Band 13 / 5M									
Modulation	RB		Channel	Antenna (H&V)	SG Level (dBm)	Antenna Factor (dBd)	Cable Loss (dB)	EIRP (dBm)	EIRP (W)
	Size	offset							
QPSK	1	0	Lowest	H	16.75	5.01	2.59	19.17	0.0827
				V	14.59	5.01	2.59	17.01	0.0502
	1	0	Middle	H	19.63	4.82	2.59	21.86	0.1533
				V	15.07	4.82	2.59	17.30	0.0537
	1	0	Highest	H	20.86	4.45	2.59	22.72	0.1871
				V	15.05	4.45	2.59	16.91	0.0491
16QAM	1	0	Lowest	H	16.75	5.01	2.59	19.17	0.0827
				V	14.59	5.01	2.59	17.01	0.0502
	1	0	Middle	H	19.63	4.82	2.59	21.86	0.1533
				V	15.07	4.82	2.59	17.30	0.0537
	1	0	Highest	H	20.86	4.45	2.59	22.72	0.1871
				V	15.05	4.45	2.59	16.91	0.0491
Limit								**34.77**	**3**

Radiated Power (ERP) for LTE Band 13 / 10M									
Modulation	RB		Channel	Antenna (H&V)	SG Level (dBm)	Antenna Factor (dBd)	Cable Loss (dB)	EIRP (dBm)	EIRP (W)
	Size	offset							
QPSK	1	0	Middle	H	16.35	5.01	2.59	18.77	0.0754
				V	18.72	5.01	2.59	21.14	0.1301
16QAM	1	0	Middle	H	18.11	4.82	2.59	20.34	0.1081
				V	17.31	4.82	2.59	19.54	0.0900
Limit								**34.77**	**3**

ATTACHMENT B--RADIATED OUT BAND OF EMISSIONS

Measurement Data (worst case)

Test mode:	LTE BAND 2 20MHz (RB size 1 & RB offset 0) for QPSK						
Channel:	Middle						
Frequency (MHz)	Spurious Emission					Limit (dBm)	Result
	Polarization (H&V)	Read Level (dBm)	Antenna Correct Factor (dBi)	Cable Loss (dB)	Emission Level (dBm)		
3759.90	Horizontal	-55.29	14.94	6.12	-34.23	-13.00	Pass
5640.20	H	-64.68	13.87	7.86	-42.95		
7519.60	H	-73.41	14.49	9.54	-49.38		
3759.90	Vertical	-53.78	14.94	6.12	-32.72	-13.00	Pass
5640.20	V	-67.11	13.87	7.86	-45.38		
7519.60	V	-73.57	14.49	9.54	-49.54		

Remark: 1, The testing has been conformed to 10*1880MHz=18800MHz.
2, All other emissions more than 30 dB below the limit.
3, Emission Level= Read Level+ Antenna Correct Factor +Cable Loss

Test mode:	LTE BAND 4 20MHz (RB size 1 & RB offset 0) for QPSK						
Channel:	Middle						
Frequency (MHz)	Spurious Emission					Limit (dBm)	Result
	Polarization (H&V)	Read Level (dBm)	Antenna Correct Factor (dBi)	Cable Loss (dB)	Emission Level (dBm)		
3465.99	Horizontal	-52.40	14.94	6.12	-31.34	-13.00	Pass
5198.98	H	-64.05	13.87	7.86	-42.32		
6932.13	H	-72.04	14.49	9.54	-48.01		
3465.99	Vertical	-53.57	14.94	6.12	-32.51	-13.00	Pass
5198.98	V	-64.51	13.87	7.86	-42.78		
6932.13	V	-71.84	14.49	9.54	-47.81		

Remark: 1, The testing has been conformed to 10*1732.5MHz=17325MHz.
2, All other emissions more than 30 dB below the limit.
3, Emission Level= Read Level+ Antenna Correct Factor +Cable Loss

Test mode:	LTE BAND 5 10MHz (RB size 1 & RB offset 0) for QPSK						
Channel:	Middle						
Frequency (MHz)	Spurious Emission					Limit (dBm)	Result
	Polarization (H&V)	Read Level (dBm)	Antenna Correct Factor (dBi)	Cable Loss (dB)	Emission Level (dBm)		
1673.00	Horizontal	-55.55	14.94	6.12	-34.49	-13.00	Pass
2509.50	H	-66.33	13.87	7.86	-44.60		
3346.00	H	-71.62	14.49	9.54	-47.59		
1673.00	Vertical	-56.94	14.94	6.12	-35.88	-13.00	Pass
2509.50	V	-65.50	13.87	7.86	-43.77		
3346.00	V	-70.30	14.49	9.54	-46.27		

Remark: 1, The testing has been conformed to 10*836.5MHz=8365MHz.
2, All other emissions more than 30 dB below the limit.
3, Emission Level= Read Level+ Antenna Correct Factor +Cable Loss

Test mode:	LTE BAND 12 10MHz (RB size 1 & RB offset 0) for QPSK						
Channel:	Middle						
Frequency (MHz)	Spurious Emission					Limit (dBm)	Result
	Polarization (H&V)	Read Level (dBm)	Antenna Correct Factor (dBi)	Cable Loss (dB)	Emission Level (dBm)		
5070.00	Horizontal	-53.06	14.94	6.12	-32.00	-25.00	Pass
7605.00	H	-64.24	13.87	7.86	-42.51		
10140.00	H	-68.69	14.49	9.54	-44.66		
5070.00	Vertical	-53.29	14.94	6.12	-32.23	-25.00	Pass
7605.00	V	-64.11	13.87	7.86	-42.38		
10140.00	V	-68.71	14.49	9.54	-44.68		

Remark: 1, The testing has been conformed to 10*2535.0MHz=25350MHz.
2, All other emissions more than 30 dB below the limit.
3, Emission Level= Read Level+ Antenna Correct Factor +Cable Loss

Test mode:	**LTE BAND 13 10MHz (RB size 1 & RB offset 0) for QPSK**						
Channel:	**Middle**						
Frequency (MHz)	Spurious Emission					Limit (dBm)	Result
	Polarization (H&V)	Read Level (dBm)	Antenna Correct Factor (dBi)	Cable Loss (dB)	Emission Level (dBm)		
1673.00	Horizontal	-53.08	14.94	6.12	-32.02	-25.00	Pass
2509.50	H	-62.52	13.87	7.86	-40.79		
3346.00	H	-70.29	14.49	9.54	-46.26		
1673.00	Vertical	-57.44	14.94	6.12	-36.38	-25.00	Pass
2509.50	V	-64.64	13.87	7.86	-42.91		
3346.00	V	-72.64	14.49	9.54	-48.61		

Remark: 1, The testing has been conformed to 10*2535.0MHz=25350MHz.
2, All other emissions more than 30 dB below the limit.
3, Emission Level= Read Level+ Antenna Correct Factor +Cable Loss

------End of Report------