包装清单

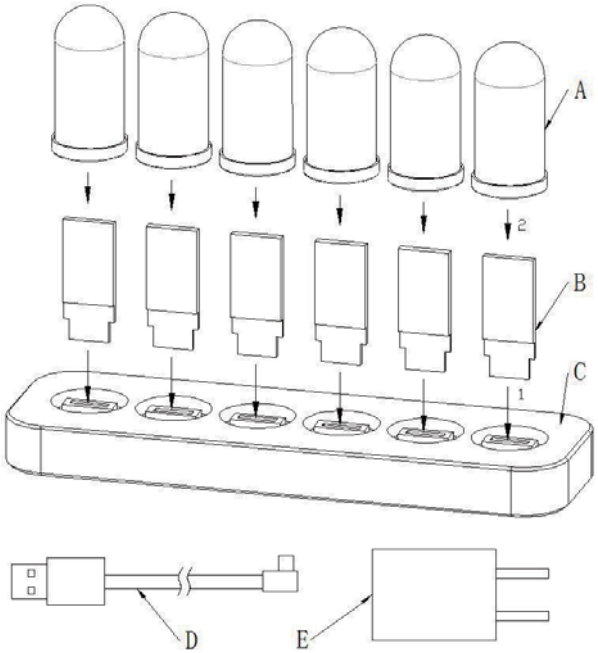

A 磁吸玻璃罩 x 6　　B IPS 彩屏 x 6

C 铝合金底座 x 1　　D USB 电源线 x 1

E USB 插头 x 1

组装步骤

1. IPS 彩屏朝前插入底座，插好后再撕下屏幕保护膜
2. 放玻璃罩，注意玻璃罩的方向，确保玻璃罩放置平整
3. 插上 USB 电源线跟插头完成安装

使用方法

一、按键分布说明：

本灯钟总共有 6 个隐藏式按键分布及命名如图 1 所示：

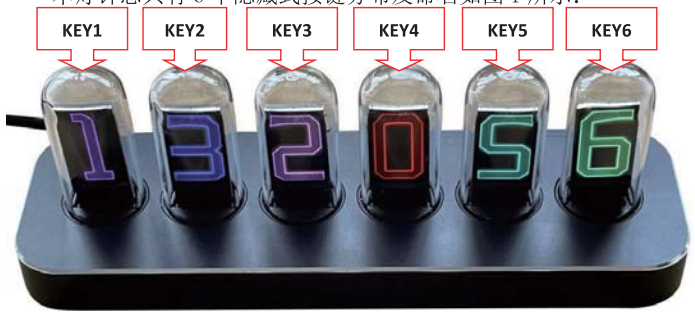

通过手指垂直按压玻璃罩触发按键，如下图所示：

图 2：1 级界面

四、显示及菜单说明：

本灯钟显示界面总共有 3 级菜单界面：

1 级界面：时钟显示主界面，显示时间;秒表;番茄时钟;表白模式，如上图所示。

图 3：2 级界面 用于选择需要设置的功能

图 4：3 级界面-时间设置

图 5：3 级界面-日期设置

图 6：3 级界面-RBG 背景灯设置

图 7：3 级界面-显示风格设置

图 8：3 级界面-显示开启/关闭设置

二、按键操作说明：

- 在 1 级界面下，按下任意按键，可进入 2 级界面。
- 在 2 级界面可以按照屏幕提示，选择相应的功能设置（**垂直单击按压玻璃罩**），例如：想要进行时间调整设置，则按下 KEY1 键，系统会进入如图 4 所示的时间设置界面（3 级界面）。如不需要设置，按下 KEY6 键（对应屏幕提示为 ESC），系统会退回到 1 级界面。
- 在 3 级界面下，可按照屏幕提示，操作对应的按键对需要的功能进行调整，例如在 3 级界面-时间设置界面下，如果需要设置时钟的小时，则单击 KEY1 按键进行调整。调整完成后，单击 KEY5 按键（对应屏幕提示为 ENTER）进行保存并返回到 1 级界面；如不保存当前操作，单击 KEY6 键并退回到 1 级界面。

三、APP 使用：

本灯钟支持安卓手机/苹果手机 APP 操作，请联系经销商下载相应的 APP

Packing list

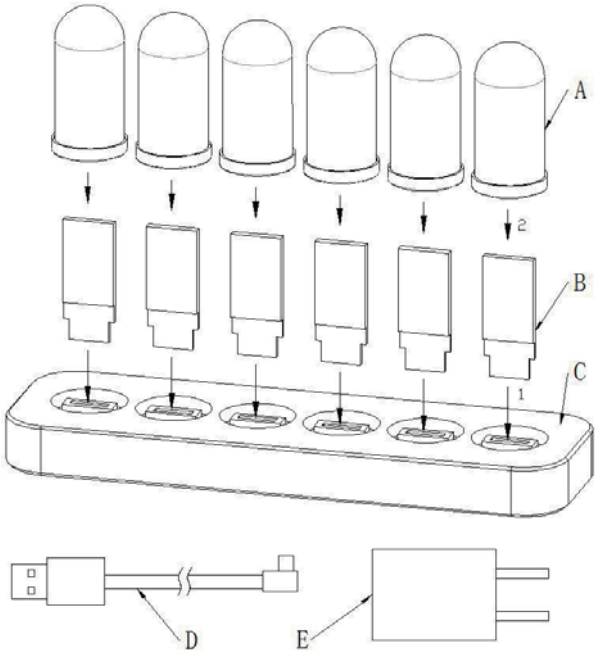

A Magnetic glass cover x 6 B IPS color screen x 6

C Aluminum alloy base x 1 D USB power cord x 1

E USB plug x 1

Assembly steps

1. Insert the IPS color screen forward into the base and tear off the screen protective fi
2. Place the glass cover and pay attention to the direction of the glass cover to ensure t
3. Plug in the USB power cord and plug to complete the installation.

Usage

1. Button distribution:

This clock has a total of 6 hidden buttons, which are distributed and named as shown

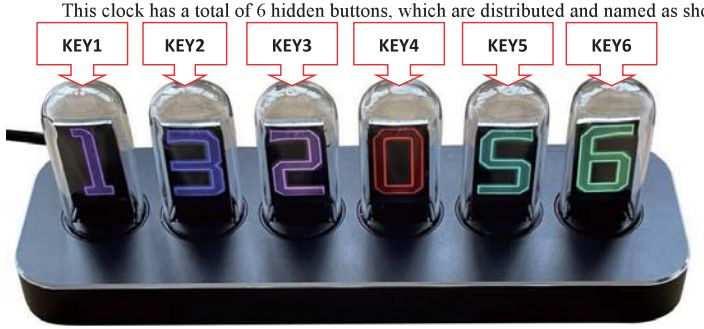

Press the glass cover vertically to trigger the buttons, as shown:

Figure 2: Level 1 interface

2. Display and menu:

The light clock display interface has a total of 3 levels of menu interface:

Level 1 interface: clock display main interface, display time; stopwatch; Pomodoro clock; confession mode, as shown in the figure above.

Figure 3: Level 2 interface, used for selecting functions to be set

Figure 4: Level 3 interface-time setting

Figure 5: Level 3 interface-date setting

Figure 6: Level 3 interface-RBG background light setting

Figure 7: Level 3 interface-display style settings

Figure 8: Level 3 interface-display on/off settings

3. Key operation:

- In the level 1 interface, press any button to enter the level 2 interface.
- In the level 2 interface, you can follow the on-screen prompts to select the appropriate function settings (vertical click to press the glass cover). For example, if you want to make time adjustment settings, press the button KEY1, and the system will enter the time setting interface (level 3 interface) shown in figure 4. If no setting is required, press the KEY6 button (the corresponding screen prompt is ESC), the system will return to the level 1 interface.
- In the level 3 interface, you can follow the screen prompts and operate the corresponding buttons to adjust the required functions. For example, in the level 3 interface-time setting interface, if you need to set the hour of the clock, click the KEY1 button to adjust. When the adjustment is complete, click the KEY5 button (corresponding to the screen prompt is ENTER) to save and return to the level 1 interface; if you do not save the current operation, click button 6 and return to the level 1 interface.

4. APP application:

This light clock supports Android phone/Apple phone APP operation, please contact the dealer to download the corresponding APP.

:

FCC WARNING

This device complies with part 15 of the FCC Rules. Operation is subject to the following two conditions: (1) this device may not cause harmful interference, and (2) this device must accept any interference received, including interference that may cause undesired operation.

Any changes or modifications not expressly approved by the party responsible for compliance could void the user's authority to operate the equipment.

NOTE: This equipment has been tested and found to comply with the limits for a Class B digital device, pursuant to Part 15 of the FCC Rules. These limits are designed to provide reasonable protection against harmful interference in a residential installation. This equipment generates, uses and can radiate radio frequency energy and, if not installed and used in accordance with the instructions, may cause harmful interference to radio communications. However, there is no guarantee that interference will not occur in a particular installation.

If this equipment does cause harmful interference to radio or television reception,
which can be determined by turning the equipment off and on, the user is encouraged to try to correct the interference by one or more of the following measures:

-- Reorient or relocate the receiving antenna.

-- Increase the separation between the equipment and receiver.

-- Connect the equipment into an outlet on a circuit different
from that to which the receiver is connected.

-- Consult the dealer or an experienced radio/TV technician for help.

To maintain compliance with FCC’s RF Exposure guidelines, This equipment should be installed and operated with minimum 20cm distance between the radiator and your body: Use only the supplied antenna.