S9

无线领夹式麦克风

使用手册

MADE IN CHINA

产品介绍

感谢您选择我们的产品。
本产品是一款智能无线领夹式话筒，可提供专业水平的现场录音输出。即插即用，无需应用程序。多用途：可用于网络直播、视频录影带拍摄、节目采访、采访录制、视频教学、会议演讲、蓝牙KTV伴奏等场合。

无线话筒由发射机和接收机两部分组成（如下图所示）

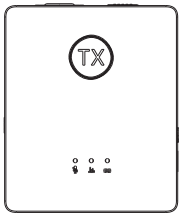

（麦克风发射器）

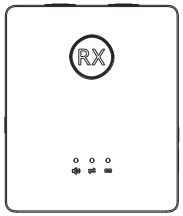

（麦克风接收器）

功能介绍

发射器功能介绍

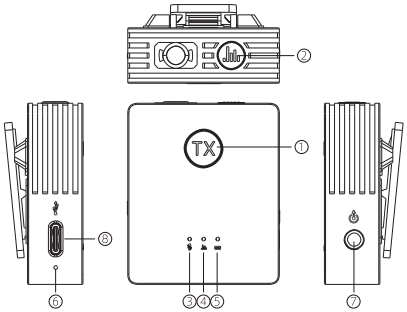

①电源开关机键：长按3秒开/关机
单击：降噪开/关
双击：静音
②混响开关：短按切换混响打开/关闭
③静音指示灯：静音打开常亮，静音关闭熄灭
④混响指示灯：混响打开常亮，混响关闭熄灭
⑤连接指示灯：已连接常亮，未连接闪烁
⑥充电指示灯：充电时红色，充满电后绿色
⑦3.5音频口：监听/耳返
⑧TYPE-C 接口:充电

配对：开机1秒自动配对
双向通讯：支持一边听音乐一边讲话

接收的功能介绍

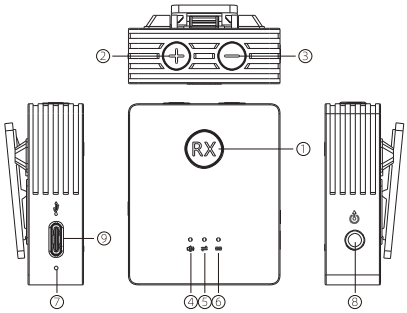

①电源开关机键：长按3秒：开/关机
双击：静音
②加号键：短按：音量+，长按：开/关蓝牙
③减号键：短按：音量-，长按：开/关闪避
④降噪指示灯：降噪打开常亮，降噪关闭熄灭
⑤蓝牙指示灯：已连接常亮，未连接闪烁，蓝牙关闭熄灭
⑥连接指示灯：已连接常亮，未连接闪烁
⑦连接指示灯：充电时红色，充满电后绿色
⑧3.5音频口：监听
⑨TYPE-C 接口:充电

配对：开机1秒自动配对
蓝牙伴奏：连接播放伴奏（设备名称：S9）
监听功能：耳机端能听到自己讲话音
内置DSP混响效果：真正混响，并非双重音
自动关机功能：Mic端5分钟未连接自动关机

产品参数

指向类型：全指向性
频率范围：2.4G
频响范围：30HZ-18KHZ
传输距离：>20米
电池容量：300mA
充电接口：Type-c充电接口
额定输入：DC=200mA
标准充电时间：约1.5小时
工作时长：5-6小时
工作温度：-10℃～45℃
储存温度:-20℃～60℃

包装清单

包装清单内容
①发射器
②接收器
③用户说明书
④充电线*1
手机连接线*1
⑤收纳盒

合格证

PASS
QC 01
合格

检验员

本产品经检验已合格

保修卡

产品编号：_____
检 验 员：_____
检验日期：_____

S9

Wireless Lavalier Microphone

Instruction Manual

MADE IN CHINA

Product Description

This product is a smart wireless lavalier microphone, which can provide professional-level recording live output. Plug and play, no APP required. Multiple uses: It can be used in web live broadcast, video Vlog shooting, program interviews, interview recording, video teaching, conference speeches, Bluetooth KTV accompaniment and other occasions.

The wireless microphone consists of two parts, the transmitter and the receiver (as shown in the figure below)

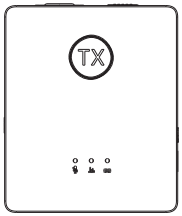

(Microphone Transmitter)

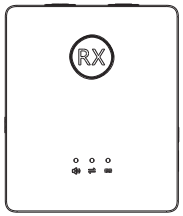

(Microphone Receive)

Function introduction

Receiver function introduction

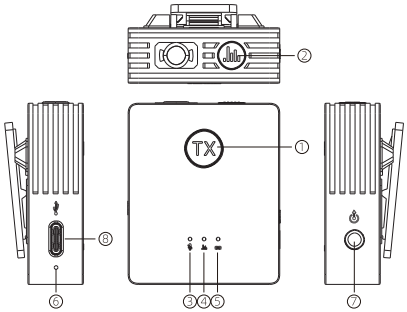

①Power key: Long press the 3-second switch
Click the noise reduction switch
Double Click Mute
②Reverberation key: Short press reverb switch
③Mute indicator: Mute turn on always on, mute turn off and off
④Reverberation indicator: The reverb is turned on and always on. The REVERB is turned off and extinguished
⑤Connecting light: Connected to constant light, not connected to flicker
⑥Charging indicator: Red when charged, green when fully charged
⑦3.5 audio ports: Wiretaps/Auricular Gyrus
⑧TYPE-C interface: Charging

Pairings: Power on. One second to auto-match
Two-way communication: Listening to music and talking

Transmitter function introduction

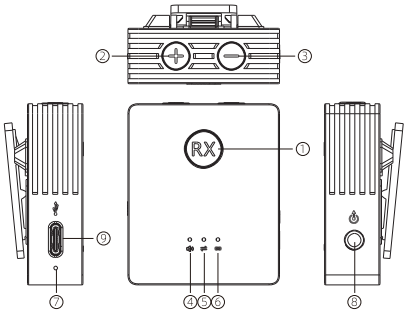

①Power key: Long press the 3-second switch
Double Click Mute
②Bonding: Short press volume, long press switch Bluetooth
③Key reduction: Short press volume-, long press switch dodge
④Noise reduction lamp: Noise reduction turn on bright, noise reduction turn off off off
⑤Bluetooth indicator: It's connected. It's on, Unconnected flicker, Bluetooth off, off, off
⑥Connecting light: Connected to constant light, not connected to flicker
⑦Charging indicator: Red when charged, green when fully charged
⑧3.5 audio ports: Wiretaps
⑨TYPE-C interface: Otg live/Charging

Pairings: Power on. One second to auto-match
Bluetooth accompaniment: Connect to play accompaniment (device name: S9)
Listening function: You can hear yourself through your headphones
BUILT-IN DSP reverberation effect: Real REVERB, not dualism
Automatic shutdown function: MIC TERMINAL AUTOMATIC SHUTDOWN AFTER 5 minutes without connection

5. Product Parameters

Pointing type: omnidirectional
Frequency range: 2.4G
Frequency response range: 30HZ-18KHZ
Transmission distance: >20 meters
Battery capacity: 300mA
Charging interface: Type-c charging interface
Rated input: DC=200mA
Standard charging time: about 1.5 hour
Working hours: 5-6 hours
Working temperature: -10℃～45℃
Storage temperature: -20℃～60℃

Packing List

Packing list content
①Transmitter
②Receiver
③User manual
④Charging cable*1
Mobile phone cable*1
⑤Storage box

NOTE: This equipment has been tested and found to comply with the limits for a Class B digital device, pursuant to part 15 of the FCC Rules. These limits are
designed to provide reasonable protection against harmful interference in a residential installation. This equipment generates uses and can radiate radio frequency energy and, if not installed and used in accordance with the instructions, may cause harmful interference to radio communications. However, there is no guarantee that interference will not occur in a particular installation. If this equipment does cause harmful interference to radio or television reception, which can be determined by turning the equipment off and on, the user is encouraged to try to correct the interference by one or more of the following measures:
- Reorient or relocate the receiving antenna.
- Increase the separation between the equipment and receiver.
-Connect the equipment into an outlet on a circuit different from that to which the receiver is connected.
-Consult the dealer or an experienced radio/TV technician for help
Changes or modifications not expressly approved by the party responsible for compliance could void the user's authority to operate the equipment.
This device complies with Part 15 of the FCC Rules. Operation is subject to the following two conditions:
(1) this device may not cause harmful interference, and (2) this device must accept any interference received, including interference that may cause undesired operation.